UNIVERSITY OF TORONTO
3 1761 01707060 8

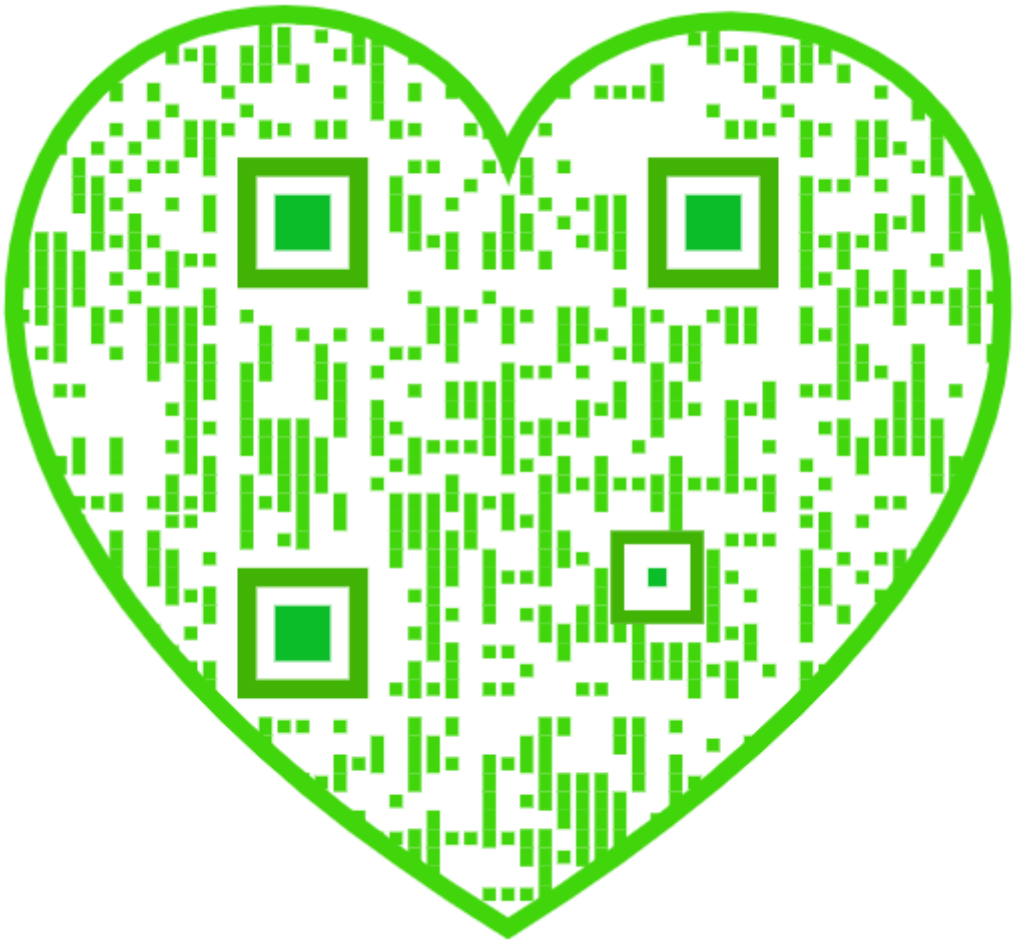

Presented to
The Library
of the
University of Toronto
by
Professor E.A.Allcut

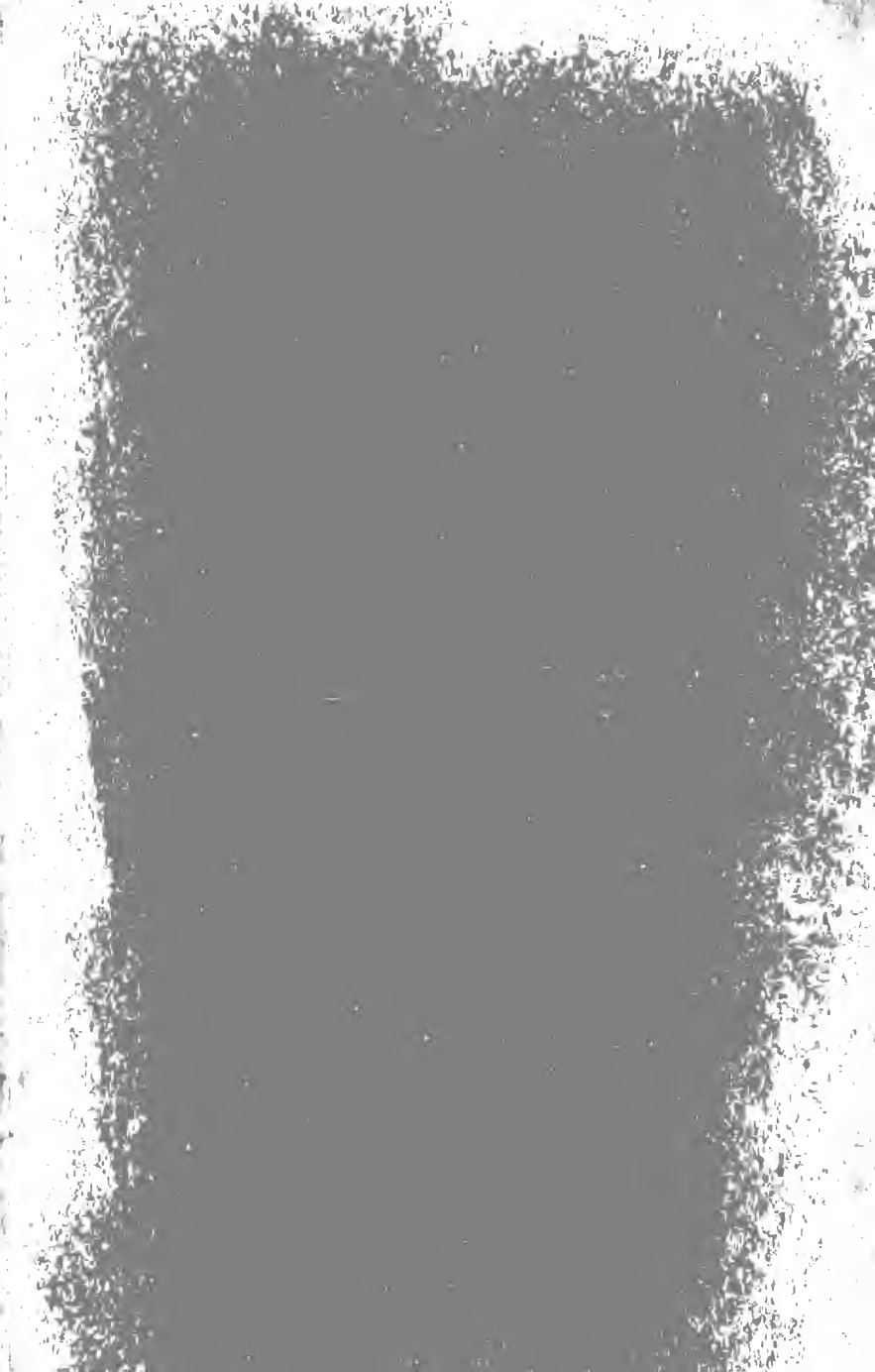

A TEXT-BOOK

ON

HEAT AND HEAT ENGINES

VOLUME I.

EIGHTEENTH EDITION, THOROUGHLY REVISED

STANDARD SCIENTIFIC TEXT-BOOKS.

BY PROFESSOR JAMIESON, M.INST.C.E., M.I.E.E., F.R.S.E.,

Formerly Professor of Engineering in The Royal Technical College, Glasgow

REVISED BY EWART S. ANDREWS, B.SC.ENG.(LOND.).

ADVANCED TEXT-BOOKS.

EIGHTEENTH EDITION. In Two Volumes. Large Crown 8vo.
Each Complete in itself, and Sold Separately.

A TEXT-BOOK OF HEAT ENGINES.

Thoroughly Revised throughout, in part Re-written, and greatly extended. Each Volume will contain about 500 pages and many Plates and Illustrations in the Text.

The latest and most up-to-date Text-book, specially arranged for the use of Engineers qualifying for the Institution of Civil Engineers, the Diplomas and Degrees of Technical Colleges and Universities, Advanced Science Certificates of British and Colonial Boards of Education and Honours Certificates of the City and Guilds of London Institute, in Mechanical Engineering, and for Engineers generally.

In Large Crown 8vo. Fully Illustrated.

APPLIED MECHANICS AND MECHANICAL ENGINEERING. Including all the Inst.C.E. Exams. in Section A: (1) Applied Mechanics; (2) Strength and Elasticity of Materials; (3, *a*) Theory of Structures. Section B (ii.): Hydraulics; Theory of Machines. Also B. of E. and C. and G. Questions.

Vol. I.—**Applied Mechanics.** TENTH EDITION. Pp. i-xviii + 371. 6s. net.
,, II.—**Strength of Materials.** NINTH EDITION. Pp. i-xviii + 314. 6s. net.
,, III.—**Theory of Structures.** EIGHTH EDITION. Pp. i-xviii + 260. 5s. net.
,, IV.—**Hydraulics.** NINTH EDITION. Pp. i-xvi + 263. 5s. net.
,, V.—**Theory of Machines.** EIGHTH EDITION. Pp. i-xx + 526. 7s. 6d net.

*** Each of the above Volumes is complete in itself and is sold separately.

INTRODUCTORY MANUALS.

Crown 8vo. With Illustrations and Examination Papers.

HEAT ENGINES: STEAM, GAS, AND OIL (Elementary Manual of). For First-Year Students, forming an Introduction to the Author's larger Work. FIFTEENTH EDITION, Revised. 3s. 6d. net.

"Should be in the hands of EVERY Engineering Apprentice."—*Practical Engineer.*

MAGNETISM AND ELECTRICITY (Practical Elementary Manual of). For First-Year Students. NINTH EDITION, Revised. 3s. 6d. net.

"A THOROUGHLY TRUSTWORTHY Text-book. PRACTICAL and clear."—*Nature.*

APPLIED MECHANICS (Elementary Manual of). For First-Year Students. With C. and G., and Stud. Inst.C.E. Questions. TWELFTH EDITION, Revised. 5s. net.

"The work has VERY HIGH QUALITIES, which may be condensed into the one word—'CLEAR.'"—*Science and Art.*

LONDON: CHARLES GRIFFIN & CO., LIMITED, EXETER ST., STRAND, W.C. 2.

Digitized by the Internet Archive
in 2007 with funding from
Microsoft Corporation

http://www.archive.org/details/textbookofheathe01jamiuoft

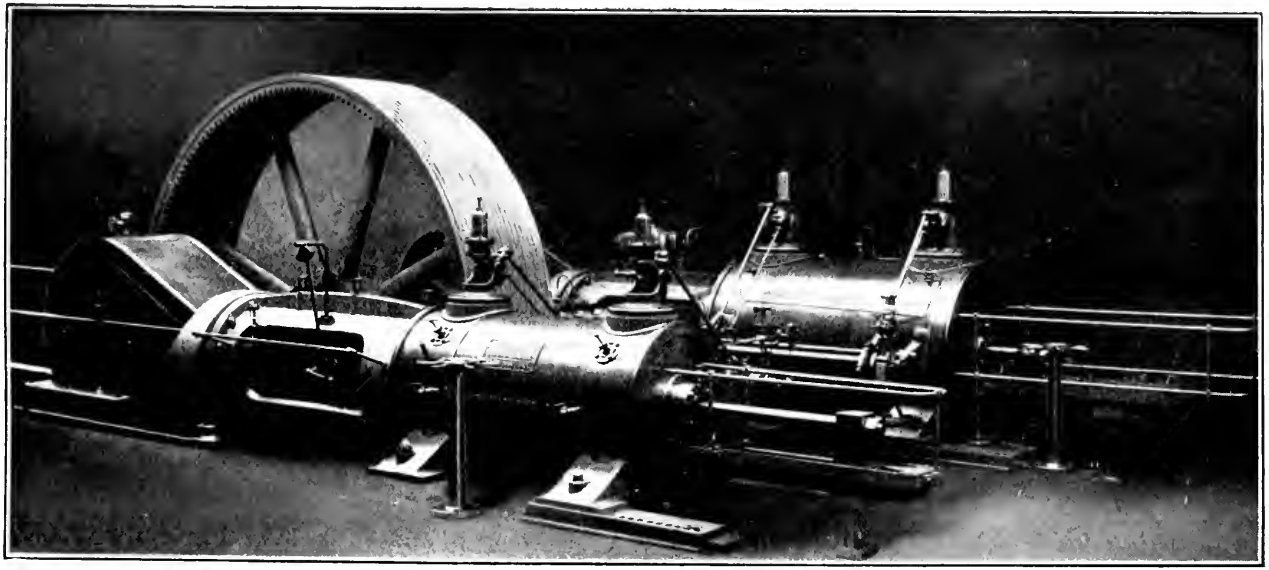

Made by Douglas & Grant, Ltd., Kirkcaldy.

HORIZONTAL CROSS COMPOUND CONDENSING STEAM ENGINE
OF 500 INDICATED HORSE-POWER.

Fitted with Balanced Drop Valves: Steam Pressure, 160 lbs.: Superheated to 600 Deg. F.
H.P. Cylinder, 19″ Dia.: L.P. Cylinder, 36″ Dia.: 36″ Stroke: 95 R.P.M.

A TEXT-BOOK

OF

HEAT AND HEAT ENGINES

Specially Arranged
For the Use of Engineers Qualifying for the Institution of Civil Engineers, The Institution of Mechanical Engineers, The Institution of Electrical Engineers, The Diplomas and Degrees of Technical Colleges and Universities, and Honours Certificates of the City and Guilds of London Institute, in Mechanical Engineering, and for Engineers generally.

BY

ANDREW JAMIESON, M.INST.C.E.,

FORMERLY PROFESSOR OF ENGINEERING IN THE ROYAL TECHNICAL COLLEGE, GLASGOW.

VOLUME I.

EIGHTEENTH EDITION,

REVISED BY

EWART S. ANDREWS, B.SC.ENG.(LOND.),

FORMERLY DEMONSTRATOR IN THE ENGINEERING LABORATORY OF UNIVERSITY COLLEGE, LONDON

With Numerous Diagrams, Folding-Plates, and Examination Questions.

LONDON:
CHARLES GRIFFIN & COMPANY LIMITED;
EXETER STREET, STRAND, W.C. 2.
1919.

[*All Rights Reserved.*]

TEM
J

635078
10.5.56

PREFACE

TO THE EIGHTEENTH EDITION.

In publishing a new edition of the advanced *Text-book on Steam and Steam Engines*, it has been decided to carry out the late Professor Jamieson's published intention of extending the scope of the book to cover "Heat and Heat Engines." In view of the size to which the original book had grown by its seventeenth edition, it was clearly impossible to effect this extension without dividing the book into two volumes.

The present volume consists in a revised form of the earlier book with the omission of the chapters dealing with Steam Turbines and Boilers.

The new volume, now in preparation, will deal with the Laws of Thermodynamics, Entropy, Steam Turbines, Steam Boilers, and Internal Combustion Engines.

The recent papers of the Associate Membership Examination of the Institution of Civil Engineers have been incorporated by the kind permission of the Council.

EWART S. ANDREWS.

22 Manor Way,
Beckenham, Kent, *November*, 1918.

ABSTRACT

OF

PREFACE TO THE FIRST EDITION.

In a leading article on educational Engineering Treatises, which appeared lately in a well-known journal, the following remarks, amongst others, struck me as being very suggestive to any one engaged in the preparation of a Text-Book for Students, and as well worthy of attention :—

"We are convinced that all the instruction contained in a great number of the engineering books already published, could be printed much more simply and concisely, and also much more lucidly, if authors sought only to impart their knowledge with the greatest brevity, without thinking at all of displaying their own learning or seeking to make a thick volume. . . . There is too much paste and scissors work, too much book-making and padding nowadays. . . . A considerable number of engineering books are so learned as to be quite over the heads of most students. Many more are so verbose, so laden with abstruse formulæ, letters, and diagrams, that the solution of the simplest question involves hours of time that can ill be spared from other work. It is no doubt true, that many engineering questions demand elaborate writing to give a precise answer with mathematical exactness; but in the majority of engineering practice, absolute exactness of such a nature is not necessary, and if a useful approximation will amply suffice, and is readily obtainable in some simply written book, that is the one that will be adopted."

The object, therefore, aimed at in the following pages, was the production of such a "simply written book" as should *not* be above the heads of my readers, but should bring the information desired, step by step, within their grasp. Whether I have succeeded in accomplishing this object, is a question which, of course, must be decided by those competent to judge.

It is designed to be an easy introduction to Professor Rankine's well-known treatise on *The Steam Engine*, and to Mr. Seaton's practical and highly appreciated *Manual of Marine Engineering*, both issued by the publishers of the present volume.

ANDREW JAMIESON.

CONTENTS.

LECTURE I.

PAGES

Early Forms of the Steam Engine: Hero's, Savery's, and Newcomen's—Questions, ... 1-7

LECTURE II.

Watt's Model of Newcomen's Engine in Glasgow University—Watt's Single- and Double-Acting Engines—Hornblower's Engine—List of Steam Engine Patents to 1805—Questions, 8-21

LECTURE III.

Temperature—Thermometry—Thermometer Tables—Pyrometry—Pyrometers of Different Kinds, with their Uses, Accuracy, and Ranges—Questions, ... 22-38

LECTURE IV.

Quantity of Heat—British and French Thermal Units—Calorimetry—Bunsen's Calorimeter—Method of Mixtures—Definitions of Thermal Capacity and Specific Heat—Examples I. to VI. on Gain and Loss of Heat by Substances, &c.—Specific Heat Tables—Thomson's Coal Calorimeter—Rosenhain Form of Thomson Coal Calorimeter—Gas and Oil Calorimeters—Calorific Values of Coal and Gases from Analysis—Specific Heats of Gases and Steam—Questions, ... 39-59

LECTURE V.

Transfer or Diffusion of Heat—Radiation—Conduction—Convection—The Ebullition and Circulation of Water in Steam Boilers—Questions, ... 60-72

LECTURE VI.

Nature of Heat—Heat is not a Substance—Rumford, Davy, and Joule's Experiments—Conversion of Work into Heat—First Law of Thermo-dynamics—Joule's Mechanical Equivalent of Heat—Latest Equivalents for the B.T.U.—Questions, ... 73-80

LECTURE VII.

PAGES

Sensible and Latent Heats of Water and Steam—Temperature and Pressure of Steam—Regnault's Experiments—Tables I. and II. on Properties of Steam—Explanations of Sensible and Latent Heats, &c.—Mercurial Pressure and Vacuum Gauges — Bourdon's Pressure and Vacuum Gauges — Schäffer's Pressure Gauge and Thalpotasimeter—Questions, 81-100

LECTURE VIII.

The Successive Effects Produced by the Continuous Application of Heat to a Piece of very Cold Ice until Dissociation takes place—The Boiling Point of a Liquid—Experiment of Water Boiling at Pressures less than One Atmosphere —Use of Large Air-Pumps in Connection with Condensers —Total Heat of Evaporation—Questions, ... 101-106

LECTURE IX.

Total Heat of Evaporation—Quantity of Water Required for Condensation of Steam, with Examples—Questions, . . 107-112

LECTURE X.

Examples of the Quantity of Water Required for Condensation of Steam with a Jet Condenser (*continued*)—Also with a Surface Condenser—Tube Surface Required under Different Conditions—Questions, ... 113-117

LECTURE XI.

Work Done during the Conversion of Water into Dry Steam—Definitions of Internal and External Work—Efficiency of Steam — Efficiency of High-Pressure Steam — General Expressions for External and Internal Work during Evaporation—Example I.—Heat Rejected to Condenser —Example II.—Partial Evaporation—Example III.—Generation of Steam in a Closed Vessel—Factor of Evaporation—Examples IV. and V.—Steam Calorimeter or Dryness Fraction Indicator—Examples VI. and VII.—Questions, ... 118-145

LECTURE XII.

Pressure and Volume of a Gas—Boyle's Law—Pressure, Volume, and Density—Watt's Diagram of Work, with Examples—Questions, ... 146-157

LECTURE XIII.

Charles's Law of the Expansion of Gases—Absolute Zero of Temperature—Specific Heats of a Gas—Specific Heats of Superheated Steam—Expansion of a Gas doing External Work—Adiabatic Expansion—Heat Engines — Carnot's Principle—Questions, ... 158-169

LECTURE XIV.

PAGES

Distribution of Steam in a Cylinder—Lap and Lead of a Valve, &c.—Angle of Advance of an Eccentric—Points of Admission, Cut-off, Release, and Compression—Diagram of the Relative Positions of Crank and Piston—Zeuner's Valve Diagrams—Questions, ... 170-196

LECTURE XV.

Actual *versus* Ideal Conditions and Behaviour of Steam in the Cylinder of a Steam Engine—Loss of Pressure and Temperature, with Condensation, between Boiler and Engine Cylinder—Initial Condensation in the Cylinder—Devices for Reducing Cylinder Condensation—Steam Jacketing as a Preventive against Initial Condensation—Superheating as a Preventive against Initial Condensation—History of Superheated Steam—Prof. Ewing's 1899 Trials on the Schmidt System—Prof. Watkinson's Superheaters—Imaginary and Actual Steam Expansion Curves—The Real Benefits of Superheated Steam — Steam Separators — Effects of Clearance—Compression or Cushioning—Causes why Compression does not Return the Work Spent on it—Lead—Wire-drawing—Release—Compounding—Questions, ... 197-220

LECTURE XVI.

Watt's Indicator—Special Features of the New Crosby Indicator—Description of the Crosby Indicator—The M'Innes-Dobbie Indicator—Errors in Indicators—Reducing Mechanism—Taking of Indicator Diagrams—Examples of Defective Diagrams and the Causes of their Defects—Combined Compound Diagrams—Fairbairn's Saturation Curve—Graphic Representation on the Indicator Diagram of the Water present during Expansion—Gain in Pounds of Steam per I.H.P. due to Superheating—Gain in B.T.U. per I.H.P. due to Superheating, with Formula—The Effects of Raising the Superheat on the Indicator Card and on the Economy of Steam—Appendix to Lecture XVI. on Amsler's Planimeter—Questions, ... 221-259

LECTURE XVII.

Nominal and Indicated Horse-Power—Rule for finding the Indicated Horse-Power of an Engine—Formula for finding the Mean Pressure—Brake Horse-Power—Prony Brake or Absorption Dynamometer—Society of Arts Rope Dynamometer—Advantages of the Rope Brake—Tests of Small Engines with the Rope Brake—Questions, ... 260-284

LECTURE XVIII.

PAGES

Action of the Crank—Tangential and Radial Forces—Diagrams of Twisting Moments with Uniform and with Variable Steam Pressure on Piston, neglecting as well as taking Account of the Obliquity of Connecting-rod—Effect of Inertia of Moving Parts—Case of a Horizontal Engine with Connecting-rod of Infinite Length—Example I.—Indicator Diagrams as modified by Inertia—Graphic Representation of the Inertia—Case of a Horizontal Engine with Connecting-rod of Finite Length—Example II.—Position of Instantaneous Axis of Connecting-rod—Crank Effort Diagrams of "The Thomas Russell Engine" and of a "Triple-Expansion Engine"—Crank Effort Diagrams of the Quadruple-Expansion Five-Crank Engines of S.S. "Inchdune"—Example III.—Questions, . . 285-313

LECTURE XIX.

Stationary Land Engines—Horizontal Non-condensing Steam Engine—Horizontal Condensing Steam Engine—Compound Non-condensing Steam Engine with Locomotive Boiler—Coupled Compound Condensing Engine, with Data *re* Crosshead, &c.—Questions, ... 314-338

LECTURE XX.

Short History and General Description of the Corliss Valve Engine—Special Features of the Corliss Cylinders and Positions of the Valves—Different Types of Corliss Valve Gears—Shape and Construction of Steam and Exhaust Valves—The Original Form of Corliss Trip Gear—Simultaneous and Relative Movements of the Wrist-Plate and Valve Levers—General Description of the Connections between and Movements of Eccentric, Wrist-Plate, Valves and Governor—Farcot-Corliss Valve Gear—Reynolds-Corliss Valve Gear—Double Eccentric Gears—Dobson's Horizontal Trip Gear—Cole, Marchent, and Morley's Economical Engine—Horizontal Corliss Engine with Inglis and Spencer Trip Gear—Hick-Hargreaves' Compensating Steam Dashpot—Compound Engine with Automatic Lubrication—Triple-expansion Engine with Automatic Lubrication—Results with Superheated Steam—Necessary Precautions to be observed with Superheaters and with Highly Superheated Steam—Tests of Willans Engine with Ordinary Steam—Percentage Gain in Steam and in B.T.U. when supplied with Superheated Steam—The Willans Central Valve Engine—Criticism of the Farcot-Corliss Cylinder and Position of Valves—Questions, ... 339-383

LECTURE XXI.

Early History of Marine Engines up to 1815—Side Lever Engine—American Beam Engine—Steeple Engine—Double Cylinder Engine—Oscillating Engine with Valve Gear—Questions, ... 384-399

CONTINUATION OF LECTURE XXI.

PAGES

Diagonal Direct-Acting Engines, with Joy's Valve Gear and Alley's Flexible Coupling, etc.—Paddle-Wheels—Radial Paddle-Wheel—Feathering Paddle-Wheels—Questions, . 400-410

CONTINUATION OF LECTURE XXI.

Early Invention of the Screw Propeller—Geared Engines—Penn's Trunk Engine—Maudslay's Return Connecting-rod Engine — Horizontal Direct-Acting Engine — Vertical Direct-Acting Engines—Questions, ... 411-417

LECTURE XXII.

Generating a Screw Surface—Pitch of a Screw—Length of Screw Blade—Depth of Thread—Angle of Screw—Circumference of Screw—Moulding a Screw—How to find the Pitch of a Finished Propeller—Early Forms—Ordinary Form—Griffith's, Hirsch's, Mangin's, and Thornycroft's Screws —Slip of the Screw—Thrust—Example I.—Negative Slip—Best Diameter, Revolutions and Pitch for a Screw-propeller—Examples II. and III.—Prof. M'Dermott's Screw Propeller Computer—Example IV.—Questions, . 418-431

LECTURE XXIII.

Theory of Triple-Expansion Engines—Triple-Expansion Engines of the S.S. *Arabian* — Brock's Quadruple - Expansion Engines for the S.S. *Buenos Aires*—Quadruple-Expansion Engines of the S.S. *Inchdune*—The "Central" Superheaters, Air-heaters, and Steam Traps—Indicator Diagrams and their Combined Results—Questions, . . 432-450

LECTURE XXIV.

Details of Engines—Cylinders—Old D Slide Valve—Ordinary or Locomotive Slide Valve—Double-Ported Slide Valve—Gridiron Slide Valve—Thom's Double-Ported Trick Valve —Piston Valve—Reversing Link Motion—Questions, . 451-466

LECTURE XXV.

Details of Engines (*Continued*)—Pistons and Piston-Rods—Crossheads—Connecting-Rods—Crank Shafts—Main-Shaft Bearings—Thrust Bearings—Condensers, Jet and Surface —General Remarks on Condensers—Air Pumps—Air-Pump Valves—Circulating Pumps—Gwynne's Centrifugal Pumps

PAGES

—Complete Condensing Plants for Electric Power Installations—Table showing the Temperature and Pressure of Aqueous Vapour in Condensers, as indicated by each Half-Inch on the Vacuum Gauge—Ejector Condensers—Splitting, Corrosion, and Pitting of Condenser Tubes—Composition of Condenser Tubes and Doors, with their usual Faults—Questions, ... 467-504

LECTURE XXVI.

Early History of the Locomotive Engine—Details of a Modern Locomotive designed for the Great Southern and Western Railway of Ireland—Giffard's Injector—Automatic or Self-Acting Injectors—Combination Injectors—Compound Locomotives—Advantages and Disadvantages of Compound Locomotives—Different Types of Compound Locomotives—Other Means of Increasing the Efficiency of the Locomotive—Questions, ... 505-521

APPENDICES, ... 523-543

INDEX, ... 545-551

TABLE OF MECHANICAL ENGINEERING QUANTITIES, SYMBOLS, UNITS, AND THEIR ABBREVIATIONS.

Quantities.	Symbols.	Defining Equations.	Practical Units.	Abbreviations of the Practical Units.
FUNDAMENTAL.				
Length,	L, l	...	Yard,	yd.
			Foot,	ft.
			Inch,	in.
Mass,	M, m	...	Pound,	lb.
Time,	T, t	...	Second,	s.
			Minute,	m.
			Hour,	h.
GEOMETRIC.				
Surface,	S, s	$S = L^2$	Square foot,	sq. ft.
			Square inch,	sq. in.
Volume,	V	$V = L^3$	Cubic foot,	cb. ft.
			Cubic inch,	cb. in.
Angle, $\angle$	$\left\{ \begin{matrix} \alpha, \beta \\ \theta, \phi \end{matrix} \right\}$	$\alpha = \frac{\text{arc}}{\text{radius}}$	Degree,	1°
			Minute,	$1'$
			Second,	$1''$
			Radian $= \frac{180^\circ}{\pi}$	rn.
MECHANICAL.				
Velocity,	v	$v = \frac{L}{T}$	Foot per second,	$\frac{\text{ft.}}{\text{s.}}$
Angular velocity,	ω	$\omega = \frac{v}{L} = \frac{\theta}{t}$	Revs. per second,	r.p.s.
			Revs. per minute,	r.p.m.
			Radians per second,	ω
Acceleration,	a, g	$a = \frac{v}{T}$	Foot per sec. per sec.	$\frac{\text{ft.}}{\text{s}^2}$
Force,	F, f	...	Pound weight (gravitational unit),	lb. wt. (or lb.)
	W, w	$F = M a$	Poundal (absolute unit),	pdl.
Pressure (per unit area),	p	$p = \frac{F}{s}$	Pound per sq. inch,	$\text{lb.}/\square''$
Work,	$(W h)$	$W h = F L$	Foot-pound,	ft.-lb.
Potential energy,	E_P	$E_P = W h$	Foot-pound,	ft.-lb.
Kinetic energy,	E_K	$E_K = \frac{W v^2}{2 g}$	Foot-pound,	ft.-lb.
Power or activity,	HP	$\text{H.P.} = \frac{W h}{T}$	Horse power,	H.P.
			Ft.-lb. per min.,	ft.-lb./m.
			Ft.-lb. per sec.,	ft.-lb./s.
Moment of inertia,	I	$I = M k^2$	... ...	lb.-ft.^2
Density,	ρ	$\rho = \frac{M}{V}$	Pound per cb. ft.,	$\frac{\text{lb.}}{\text{ft.}^3}$
			Pound per cb. in.,	$\frac{\text{lb.}}{\text{in.}^3}$

ADDITIONAL SYMBOLS AND ABBREVIATIONS USED IN THIS BOOK.

B.T.U. for British thermal units.
c ,, Clearance volume.
C_v ,, Calorific value.
E, E_f ,, Evaporation factor.
E_i ,, Internal energy.
h ,, heat any (sensible) small quantity.
H, H_T ,, Total heat of evaporation.
H_E ,, Heat (external) or work done during evaporation.
H_I ,, Heat (internal) or work done during evaporation.
H_{sa} ,, Heat units per lb. of saturated steam
H_{su} ,, Heat units per lb. of superheated steam.
H_σ ,, Heat (specific) of steam.
J ,, Joule's mechanical equivalent of the unit of heat.
L ,, Latent heat of steam.
p ,, Pitch of rivets in joints.
p_b ,, Pressure (back) in lbs. per sq. in.
p_m ,, Pressure (mean) in lbs. per sq. in.
P ,, Pressure (total).
P_S ,, Pitch of a screw propeller.
Q ,, Quantity of heat.
d Q ,, Minute quantity of heat.
r for Ratio of expansion; radius of crank-pin circle.
r.p.m. ,, Revolutions per minute.
S, s ,, Sensible heat; Slip of screw propeller; Speed of piston.
S_s ,, Shearing strength of rivets per sq. in.
S_t ,, Tensile strength of plates per sq. in.
t ,, Thickness.
t_f ,, Temperature of feed.
t_{sn} ,, Superheat at steam chest in degrees Fah.
$t°$, $t_1°$,, Temperature in degrees.
τ ,, Absolute temperatures.
T ,, Travel of slide valve.
T_s ,, Thrust of a screw propeller.
u ,, Units of heat as a suffix—*e.g.*, $10\,u$ = ten units.
V ,, Velocity.
V_s ,, Volume of 1 lb. of dry steam.
V_w ,, Volume of 1 lb. of water.
V_{ws} ,, Volume of 1 lb of wet steam.
W ,, Work done, load or weight.
W_{sa} ,, Weight of saturated steam.
W_u ,, Weight of superheated steam.
λ, ω ,, Angles, ∠.

GREEK ALPHABET.

A	α	Alpha.	I	ι	Iota.	P	ρ	Rho.
B	β	Beta.	K	κ	Kappa.	Σ	σ or ς	Sigma.
Γ	γ	Gamma.	Λ	λ	Lambda	T	τ	Tau.
Δ	δ	Delta.	M	μ	Mu	Υ	υ	Upsilon.
E	ϵ	Epsilon.	N	ν	Nu	Φ	ϕ	Phi.
Z	ζ	Zeta.	Ξ	ξ	Xi.	X	χ	Chi.
H	η	Eta.	O	o	Omicron.	Ψ	ψ	Psi.
Θ	θ	Theta.	Π	π	Pi.	Ω	ω	Omega.

HEAT AND HEAT ENGINES.

LECTURE I.

CONTENTS.—Early Forms of the Steam Engine: Hero's, Savery's, and Newcomen's.

THE student will find the history of the rise and progress of the Steam Engine both interesting and instructive. Two lectures will therefore be devoted to reviewing, as concisely as possible, the struggles of early inventors to produce mechanical work from steam.

Hero's Engine.—The first application of the elastic force of steam of which there is any record, was by Hero of Alexandria, about 130 B.C.*

From the following figure and index of parts the construction and action will at once be understood. The fire at, F, heats the water in the caldron, C, generating steam; the steam passes up by the pipe, P, in the direction shown by the arrows into the globe, G, first expelling the air, and then exhausting by the two nozzles, N_1, N_2. Owing to the nozzles being fixed in opposite directions and at right angles to the axis on which the globe is free to rotate, the unbalanced pressures which the steam exerts on that part of each pipe opposite to the opening produce a "couple," and thus turn the globe at a very high speed, but with such a small force that a great expenditure of fuel would be required to develop even a horse-power.

No other notice of the application of steam to produce motion is found until about the year 1563, when Mathesius hints at the possibility of constructing an apparatus similar in its action to that of our modern steam engine.† No device of a

* Glass models, called *Whirling Oelipiles*, are obtainable at any optician's, for illustrating the action of Hero's engine, on the "Barker mill principle."

† For complete descriptions of the attempts made by De Caus, 1624; Giovanni Branca, 1628; Marquis of Worcester, 1663; Sir Samuel Moreland, 1682; Papin, 1685 to 1695, &c., see *Descriptive History of the Steam Engine*, by Robert Stuart, C.E., published in 1825, and dedicated to Dr. Birkbeck, "Patron of the (late) Glasgow Mechanics' Institution, and at one time Professor of Natural Philosophy in the College founded by Professor Anderson in the City of Glasgow." Also, see a treatise by John Farey on *The Steam Engine*, 1827; and Prof. Thurston's *History of the Growth of the Steam Engine*, published by C. Kegan, Paul & Co.

thoroughly practical nature worth drawing the attention of students to occurs, until Captain Thomas Savery brought out his patent steam engine for raising water from mines in 1698.

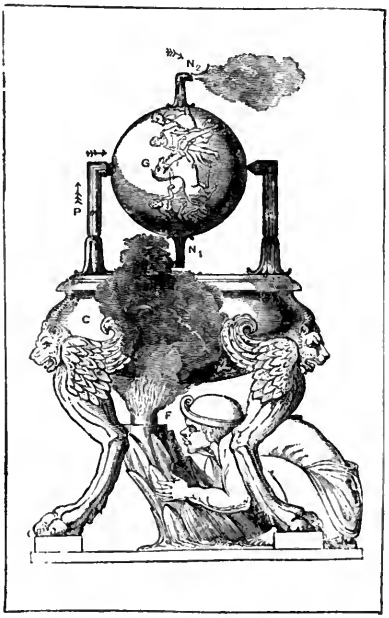

HERO'S ENGINE, 130 B.C.

F for Fire.
C ,, Caldron, containing water.
P ,, Pipe, steam supply.
G for Globe.
N_1, N_2 ,, Nozzles, steam exhaust

Savery's Engine.—Steam from the boiler, B, is admitted to the receiver, R, by opening the steam cock, S C. When the receiver is filled with steam, the cock, S C, is closed, and C J opened, which allows a douche of cold water to play on the outside of R, thus causing condensation and producing a vacuum. The atmospheric pressure acting on the mine water, at M W, forces water up through the suction valve (or cock), S V, nearly filling the receiver. C J is then closed, and S C opened, thus permitting the steam from the boiler to force the water now in the receiver up through the delivery valve (or cock), D V, and the discharge pipe, D P, to any convenient place clear of the mine.

In Savery's actual engine he adopted a complete duplex set of

boilers, receivers, and cocks, so that the operations of filling one receiver and emptying the other might be conducted simultaneously.* He placed his boilers and receivers about 20 feet above

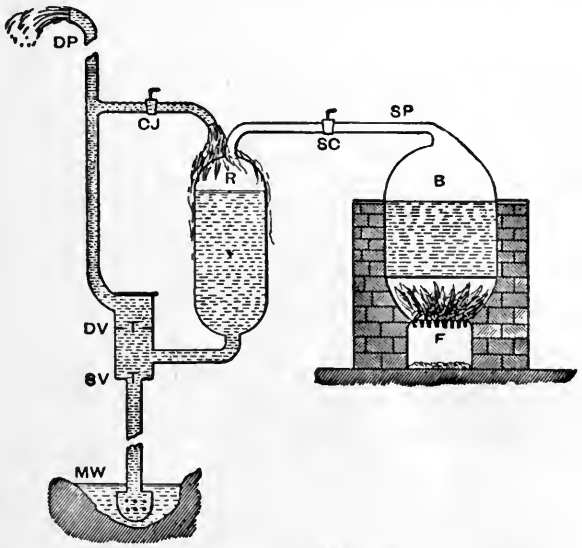

SAVERY'S ENGINE, 1698.

F	for Furnace.	M W	for Mine water.
B	,, Boiler.	S V	,, Suction valve.
S P	,, Steam pipe.	D V	,, Delivery valve.
S C	,, Steam cock.	C J	,, Condensing jet.
R	,, Receiver.	D P	,, Discharge pipe.

the bottom of the mine water, or well, and the height of the overflow from the discharge pipe about 30 feet above the receiver. The efficiency of a Savery engine, as measured by the weight of coal consumed, was tested by Smeaton in 1774, and found to be about $\frac{1}{10}$ of what can now be realised by a modern pumping-engine. The loss of heat energy, due to the alternate heating and cooling of the receiver, added to the condensation of the steam upon coming into direct contact with the water when forcing the latter out of the receiver, combined with the impossi-

* Desagulier, in 1716, improved upon Savery's engine by introducing a two-way cock between the boiler, the receiver, and the cold water injection, and introduced an inside rose injection for condensing the steam in the receiver. See Stuart on *The Steam Engine*, 1825, Fig. 20.

bility of placing the receiver much more than 20 feet above the bottom of the mine,* and the inability of engineers in those days to construct boilers of sufficient strength to withstand a steam pressure more than 15 lbs. on the square inch,† prevented the adoption of Savery's engine in most mines.

Newcomen's Atmospheric Engine.—In 1705 Thomas Newcomen, a blacksmith, associated with Savery and John Cawley, a glazier, made the experiment of introducing steam under a piston moving in a cylinder. They formed a vacuum by condensing the steam by an affusion of cold water on the *outside* of the steam vessel; and the weight of the atmosphere pressed the piston to the bottom of the cylinder. This was the first form of atmospheric engine—the simplest and most powerful machine that had hitherto been constructed. After a great many laborious attempts at Wolverhampton to make one of their engines work satisfactorily, they were one day (in March, 1712) surprised "to see the engine go several strokes, and very quick together, when, after a search, they found a hole in the piston, which let the cold water in to condense the steam in the inside of the cylinder, whereas before they had always done it on the outside." This fortunate observation gave rise to the improvement of condensing by injection, which thus rendered the cold water jacket of their steam cylinder unnecessary, and they thereafter manufactured their engines in the form shown in the following figure.

The mine pumps, M P, weighted pump-rod, W P R, and lift pump, L P, on the one side of the wooden beam, W B, being heavier than the piston, P, and piston rod, P R, always brought the piston to the top of the cylinder, C; consequently, to start the engine, the steam valve, S V, was opened, in order to expel the air by the relief or snifting valve, R V,‡ and to fill the whole cylinder with steam. The steam valve was now closed, and the injection cock, I C, opened, which caused a spray of cold water from the cold water tank, C W T, to enter the cylinder and condense the steam. The vacuum produced brought the pressure of the atmosphere into play on the top side of the piston, causing it to descend to the bottom of the cylinder, thus actuating the pumps at the other end of the beam. The condensed steam and injection water got clear away from the bottom of the

* With even a *perfect vacuum* in the receiver, the atmospheric pressure, which is usually about 15 lbs. on the square inch, could only force water up into it from a depth of 34 feet.

† Savery said, "If I could only get boilers and pipes of sufficient strength, I could force water up to a height of 1,000 feet."

‡ This valve was called the *snifting valve* by Newcomen, because the air makes a noise every time it blows through it.

cylinder by the eduction pipe, E P, to the feed water tank, F W T; the water from this tank being used to fill the boiler,

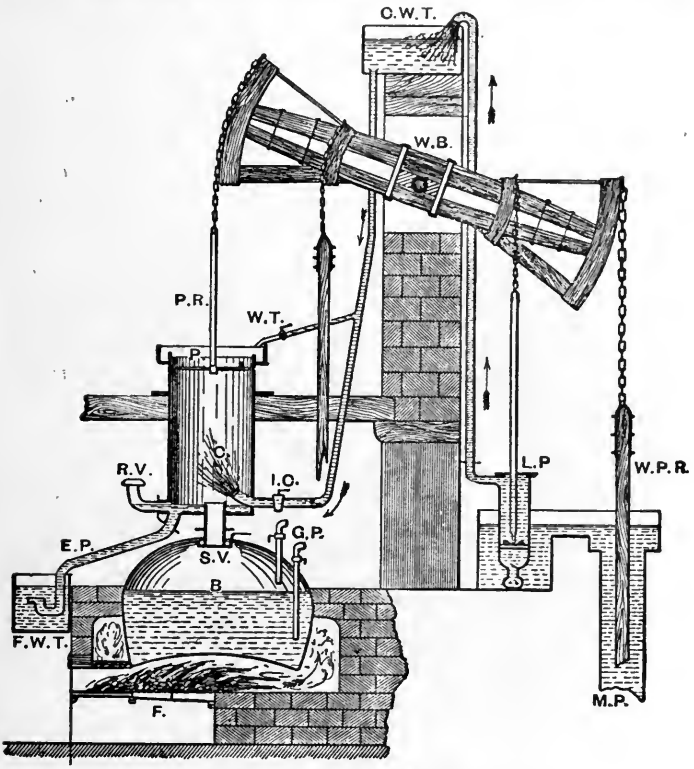

NEWCOMEN'S ENGINE, 1712.

F	for Furnace.	M P	for Mine pump.
B	,, Boiler.	L P	,, Lift pump.
G P	,, Gauge pipes.	C W T	,, Cold water tank.
S V	,, Steam valve.	W T	,, Water tap to top of piston.
C	,, Cylinder.	I C	,, Injection cock.
P	,, Piston.	R V	,, Relief or snifting valve.
P R	,, Piston rod.	E P	,, Eduction pipe.
W B	,, Wooden beam.	F W T	,, Feed water tank.
W P R	,, Weighted pump-rod.		

and the height of the water in the boiler was ascertained by the gauge pipes, G P.

At first (in 1712) the valves were opened and shut by hand. To perform these operations at the precise moment, required the most exact and unremitting attention on the part of the attendant, as the least neglect or inadvertence might be ruinous to the engine, by beating out the bottom of the cylinder, or allowing the piston to be drawn out of it. Stops were contrived to prevent both of these accidents; then strings were used to connect the handles of the cocks and valves with the beam, and finally a Mr. Beighton, in 1718, simplified the whole of these movements by causing them to be automatically opened and shut at the proper moment by means of a "tappet rod" connected with the beam. He also introduced the lever safety valve to the boiler.

Another difficulty which at first severely taxed the ingenuity of the inventors was the sudden upheaving of the cylinder, at the moment of creating the vacuum, which caused such a jolt and stress on the pipes connecting the cylinder and the boiler, as to keep them in a chronic state of leakage. It will be observed that at the instant the vacuum is produced, the piston is pressed downwards by the atmospheric pressure, but at the same time the cylinder is equally pressed upwards, so that it required to be very heavy or very securely fastened down, to prevent it rising; since no downward motion of the piston can take place until the inertia of the whole moving mass of beam, pump-rods, &c., has been overcome. This difficulty was in a measure mastered by bolting the cylinder firmly down to strong beams, and keeping it separate from the boiler.

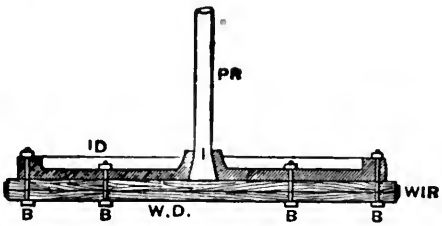

SMEATON'S PISTON.

PR for Piston rod.	BB for Bolts.
ID ,, Iron dish.	WIR ,, Wrought iron ring shrunk on like a cart-wheel tyre.
WD ,, Wooden dish	

Newcomen's piston, which consisted of a flat plate with a broad piece of leather screwed to it and turned up the sides of the cylinder two or three inches, gave considerable trouble,

owing to leakage and the cutting of the leather. An improved form of piston (see preceding figure) was afterwards introduced by Smeaton.*

*For Smeaton's improvements, see Thurston's *History of the Steam Engine;* also, see articles in *The Engineer*, beginning June 6th, 1879, p. 403. For a diagram of a Newcomen engine from an old plate, see *The Engineer*, November 28th, 1879, p. 400, and for a fine diagram of an elaborate Newcomen engine, only taken down in 1880, see the same paper, January 30th, 1880, p. 84. For Mr. Henry Davey's Presidential Address to the Inst. Mech. Engineers on October 16th, 1903, see *Proceedings* of that Institution, and all current Engineering Papers for October 30th and November 6th, 1903.

Lecture I.—Questions.

1. Give a free-hand sketch of Savery's engine, with index of parts. Describe its action in your own words. State clearly how it was so wasteful of fuel, and what limited its application to deep mines.

2. Suppose the water in a mine to be 25 feet below the point to which it rose in Savery's receiver, and the top of the discharge pipe 30 feet above the bottom of the receiver, what vacuum and pressure of steam in pounds per square inch would be necessary to work the engine? *Ans.* 11 lbs., and 13·2 lbs.

3. Give a free-hand sketch with index of Newcomen's engine. Describe in your own words its action, and how you would start it.

4. Suppose the diameter of a Newcomen's engine cylinder to be 30 inches, the stroke 5 feet, the effective pressure per square inch due to the vacuum, 10 lbs., and 15 up and down strokes to be made per minute, how many pounds of water would it lift per minute to a height of 100 feet, neglecting all losses due to friction, &c.? *Ans.* 5303·5 lbs.

LECTURE II.

CONTENTS.—Watt's Model of Newcomen's Engine in Glasgow University—Watt's Single and Double Acting Engines—Hornblower's Engine—List of Steam Engine Patents to 1805.

UP to the period when Smeaton perfected the atmospheric engine, the progress of the "fire engine," as the steam engine was then called, had been merely *empirical;* and in everything that depended on principle, the steam engine of that period was a most rude, wasteful, and inefficient machine. Then came the time when science was to effect more in a few years than mere empirical progress had done in nineteen centuries. In 1759, James Watt had his attention directed by Robison to the subject of the steam engine, and for a few years afterwards made various experiments on the properties of steam. In 1763 and 1764, Watt, while engaged in the repair of a small model of Newcomen's engine (belonging to the University of Glasgow, and since preserved by that University as the most precious of relics), perceived the various defects of that machine, and ascertained by experiment their causes.

Watt set to work scientifically from the first. He studied the laws of the pressure of elastic fluids, and of the evaporating action of heat, so far as they were known in his time; he ascertained as accurately as he could, with the means of experimenting at his disposal, the expenditure of fuel in evaporating a given quantity of water, and the relations between the temperature, pressure, and volume of the steam. Then, reasoning from the data which he had thus obtained, he framed a body of principles expressing the conditions of the efficient and economic working of the steam engine, which are embodied in an invention described by himself in the following words, in the specification of his patent of 1769:—*

"My method of lessening the consumption of steam, and consequently fuel, in fire engines, consists of the following principles:—

"*First.* That vessel in which the powers of steam are to be employed to work the engine, which is called the cylinder in

* Extract from *The Steam Engine and other Prime Movers*, by Prof. Rankine.

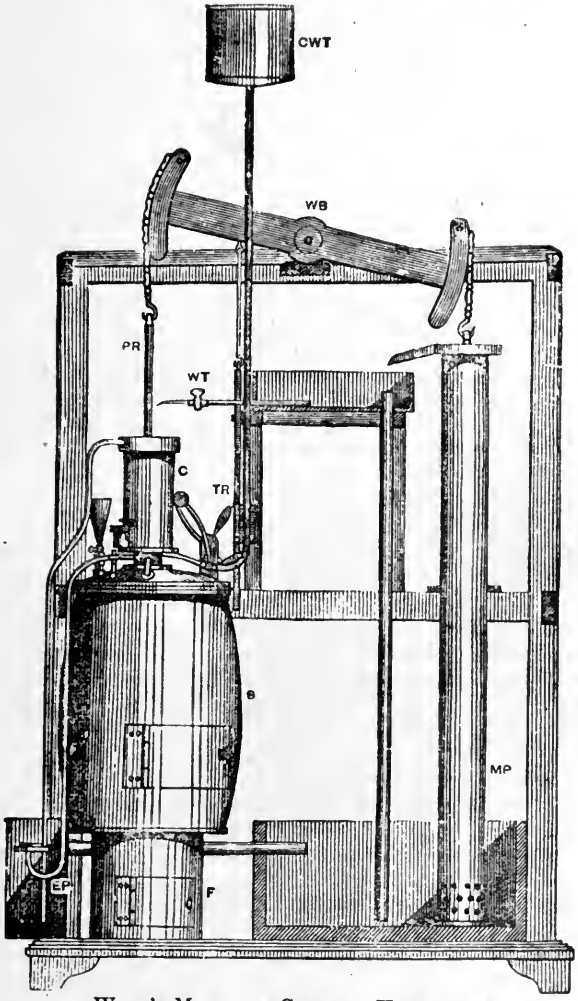

WATT'S MODEL IN GLASGOW UNIVERSITY.

F, for Furnace; B, Boiler, C, Cylinder; PR, Piston rod; WB, Wooden beam; MP, Mine pump; TR, Tappet rod; CWT, Cold-water tank; WT, Water tap for keeping piston tight; EP, Exhaust pipe.

NOTE.—In working to repair the model here represented, James Watt, in 1765, made the discovery of a separate condenser, which has identified his name with the Steam Engine.

common fire engines, and which I call the steam vessel, must, during the whole time the engine is at work, be kept as hot as the steam that enters it; first, by enclosing it in a case of wood, or any other materials that transmit heat slowly; secondly, by surrounding it with steam or other heated bodies; and thirdly, by suffering neither water nor any other substance colder than the steam to enter or touch it during that time.

"*Secondly.* In engines that are to be worked wholly or partially by condensation of steam, the steam is to be condensed in vessels distinct from the steam vessels or cylinders, although occasionally communicating with them; these vessels I call condensers; and, while the engines are working, these condensers ought at least to be kept as cold as the air in the neighbourhood of the engines, by application of water, or other cold bodies.

"*Thirdly.* Whatever air or other elastic vapour is not condensed by the cold of the condenser, and may impede the working of the engine, is to be drawn out of the steam vessels or condensers by means of pumps, wrought by the engines themselves, or otherwise.

"*Fourthly.* I intend, in many cases, to employ the expansive force of steam to press on the pistons, or whatever may be used instead of them, in the same manner in which the pressure of the atmosphere is now employed in common fire engines. In cases where cold water cannot be had in plenty, the engines may be wrought by this force of steam only, by discharging the steam into the air after it has done its office.

"*Lastly.* Instead of using water to render the pistons and other parts of the engines air and steam tight, I employ oils, wax, resinous bodies, fat of animals, quicksilver, and other metals in their fluid state."

To start Watt's Single-acting Engine:

First. Blow through, by opening all the valves, V_1, V_2, V_3. This allows the steam from the boiler to expel the air from the cylinder, steam passages, and condenser.

Second. Shut valve, V_2, and open injection cock, I C. This creates a vacuum below the piston, and at the same time brings into play the steam pressure above it, causing the piston to descend.

Third. Close valves V_1 and V_3, and open V_2. This allows the steam which forced down the piston to find its way below it, and thus to create an equal pressure on each side of it, when the weight of the pump-rods, acting on the other end of the beam, brings the piston to the top of the cylinder.

These *second* and *third* operations are repeated automatically by the tappet rod when the engine has been fairly started.

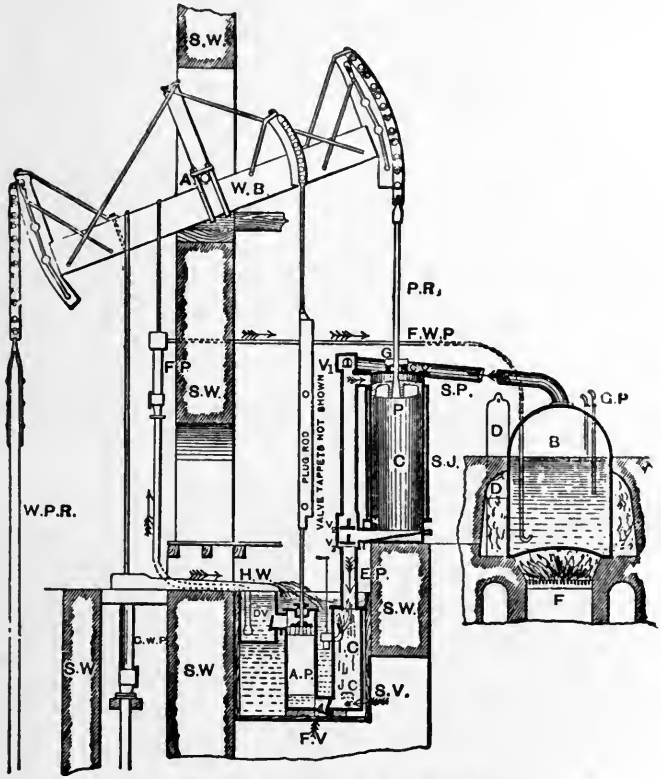

WATT'S SINGLE-ACTING ENGINE.

F	for Furnace.	W B	for Wooden beam.
D	,, Damper.	A	,, Axis.
B	,, Boiler.	W P R	,, Weighted pump-rod down to bottom of mine.
F W P	,, Feed water pipe.		
G P	,, Gauge pipes.	E P	,, Exhaust pipe.
S P	,, Steam pipe.	J C	,, Jet condenser.
V_1	,, Steam valve.	I C	,, Injection cock.
V_2	,, Equilibrium valve.	C W P	,, Cold-water pump.
V_3	,, Exhaust ,,	A P	,, Air pump.
C	,, Cylinder.	S V	,, Snifting valve.
S J	,, Steam jacket.	F V	,, Foot valve.
C C	,, Cylinder cover.	D V	,, Delivery valve.
G	,, Gland and stuffing box.	H W	,, Hot well.
P	,, Piston.	F P	,, Feed pump.
P R	,, Piston rod.	S W	,, Stone work.

THE FOLLOWING IS AN ABBREVIATED LIST OF IMPROVEMENTS EFFECTED BY WATT ON SINGLE-ACTING ENGINES.

1. Steam jacket to keep cylinder warm.
2. Separate condenser.
3. Air pump to draw off air and condensed steam.
4. Expansive working of steam in the cylinder.
5. Improved piston, cylinder cover, gland, and stuffing box.
6. Cataract or hydraulic governor for regulating the speed.

By these several improvements, Watt reduced the amount of fuel required to produce a certain power to about one-third of that required in Newcomen's engine. So fully was this recognised, that Watt, in granting licenses to use his engines, received a *third part of the saving of coals* which was made by his engines, when compared with an atmospheric engine, doing the same work with coals of the same quality.

Watt's Cataract Governor.—The cataract governor was invented by Watt, to regulate the speed of his single-acting pumping engines, and is so simple that the student may readily understand it without the aid of a diagram.* This governor consisted of a pump placed in a tank of water below the level of the cylinder, and the plunger of this pump was attached to a long lever. This lever was loaded with a heavy weight on the same side of the fulcrum as the plunger, and the lever projected out on the other side of the fulcrum. The tappet rod, which was worked off the main beam, engaged with the projecting end of this lever when the piston of the engine was travelling downwards, and therefore raised the plunger of the pump. When the piston of the engine began to rise again (due to the opening of the equilibrium valve by the tappet rod), the heavy weight on the same end of the cataract lever as the plunger caused the latter to descend and to force out the water which it had drawn in during its up-stroke. The water was forced out through a small cock, and the time occupied by the pump plunger in its descent depended upon the amount of opening given to this cock, which could be regulated by the attendant. Since the opening of the steam valve of the engine, which caused the down-stroke of the piston, was effected by a rod from the cataract pump lever, the down-stroke of the engine could not take place until the pump plunger had descended sufficiently to open the steam valve. It will therefore be apparent that by regulating the amount of opening of the discharge cock, the pump plunger could be made to descend with any required

* Large wall diagrams illustrating clearly Watt's cataract governor may be had from the Science and Art Department. It is shown at, P, in the following figure.

speed, and thus the steam valve of the engine opened any required number of times per minute.

The following diagram illustrates an improved form of Watt's single-acting pumping engine, and the cataract governor

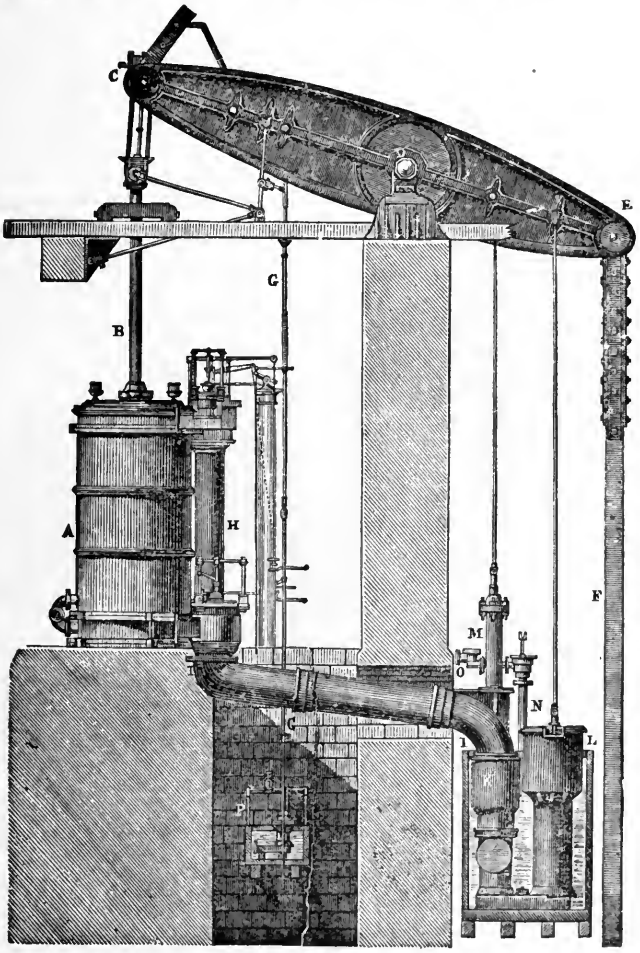

IMPROVED FORM OF WATT'S SINGLE-ACTING PUMPING ENGINE.

NOTE.—The student should make a free-hand sketch of the above figure and write index of parts, using the first letter of the names of the parts.

Watt's Double-acting Engine.—Hitherto Watt had only introduced steam acting against a piston to press it downwards, thus losing time and the opportunity of taking advantage of the pressure of the steam in the up-stroke to increase the power. In 1782, however, after he had removed from Glasgow to Birmingham, and there joined in partnership with Mr. Boulton, he took out a patent for a "double-acting engine." This engine was freed from the enormous dead weight of counterpoises, which had hung on it from the first attempts of Newcomen, for the purpose of equalising the motion and producing the up-stroke.

Watt says:—"My second improvement upon steam or fire engines, consists in employing the elastic power of the steam to force the piston upwards, and also to press it downwards alternately, by making a vacuum above or below the piston respectively, and, at the same time, employing the steam to act upon the piston in that end, or exerted upon the piston only in one direction, whether upwards or downwards." His 1782 patent engine was considerably improved by his patent of 1784, of which we now give a drawing and description.

To start Watt's Double-acting Engine :—

First. Blow through, by opening all the valves, V_1, V_2, V_3, V_4.

Second. If the piston is at top of cylinder, shut valves, V_2 and V_3, and open injection cock, I C. This creates a vacuum underneath the piston, and at the same time brings into play the steam pressure above it, causing the piston to descend.

Third. When the piston has reached the end of its stroke, shut valves V_1, V_4, and open V_2, V_3. This permits the steam to exhaust from the top of piston direct to the condenser, and at the same time admits steam from the boiler underneath it, causing the piston to *ascend.*

These second and third operations are repeated automatically by means of the plug rod and tappets.

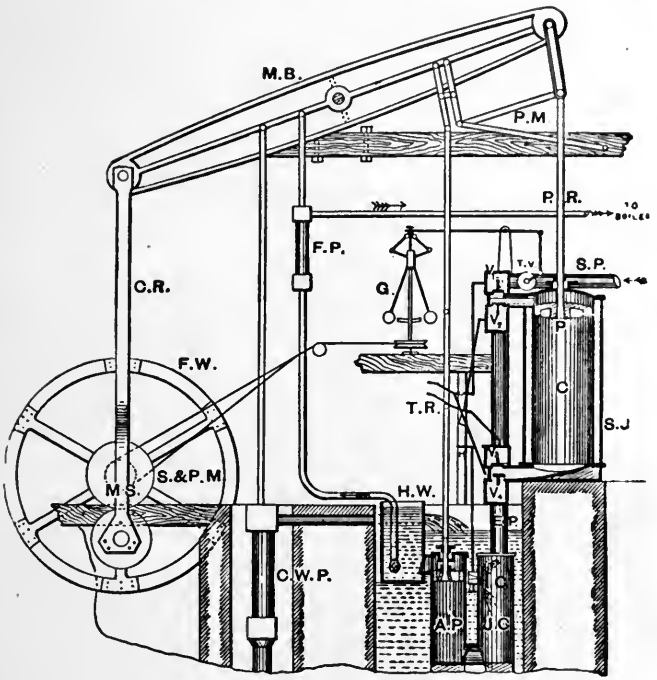

WATT'S DOUBLE-ACTING ENGINE, 1784.

S P	for Steam pipe.	H	for Handle.
T V	,, Throttle valve.	A P	,, Air pump.
G	,, Governor,	H W	,, Hot well.
V_1, V_3,	,, Steam valves connected by a pipe.*	F P	,, Feed pump.
		C W P	,, Cold-water pump.
V_2, V_4,	,, Exhaust valves also connected by a pipe.	P	,, Piston.
		P R	,, Piston rod.
T R	,, Tappet (or plug) rod.	P M	,, Parallel motion.
C	,, Cylinder.	M B	,, Metal beam.
S J	,, Steam jacket.	C R	,, Connecting rod.
E P	,, Exhaust pipe.	S & P M	,, Sun and planet motion
J C	,, Jet condenser (separate).	M S	,, Main shaft.
I C	,, Injection cock.	F W	,, Fly-wheel.

* In the drawing the steam pipes connecting valves, V_1 and V_3, and the exhaust valves, V_2 and V_4, cannot be fully shown, but it will form a useful exercise for the student to make a section at right angles to the figure through these valves, including all the necessary pipes.

List of Improvements introduced or Patented by Watt since the Invention of his "Single-acting Engine."

1. Applying steam on both sides of the piston.
2. Parallel motion to guide the piston rod in a straight line.
3. Metal beam instead of the large clumsy wooden one.
4. Sun and planet motion to convert reciprocating rectilineal to rotative motion.*
5. Governor to regulate the speed of his rotative engines (see index at end for Governors).
6. Indicator to ascertain the pressure of steam in the cylinder (see index at end for Watt's Indicator).

* There can be no doubt that Watt first thought of applying the crank to convert the reciprocating motion of the piston into a rotative one, but, having neglected to take out a patent, the invention was communicated by a workman to the engineer erecting an engine for a Mr. Matthew Washbrough, of Bristol, who patented the application. The following is Watt's own narrative on this subject:—"Among the many schemes which passed through my mind, none appeared so likely to answer the purpose as the application of a crank in the manner of a common turning-lathe (an invention of great merit, of which the humble inventor and even its era are unknown); but, as the rotative motion is produced in that machine by the impulse given to the crank in the descent of the foot only, and is continued in its ascent by the momentum of the wheel, which here acts as a fly; and, being unwilling to load my engine with a fly heavy enough to continue the motion during the ascent of the piston (and even were a counterweight employed to act, during that ascent, on a fly heavy enough to equalise the motion), I proposed to employ two engines, acting upon two cranks, fixed on the same axis, at an angle of 120° to one another, and a weight placed on the circumference of the fly at the same angle to each of the cranks, by which means a motion might be rendered nearly equal, *and a very light fly* would only be requisite."

It is evident Watt did not then appreciate the advantage of a heavy fly-wheel to equalise motion. The application of a fly-wheel to equalise the motion of the piston was first suggested by Fitzgerald before 1772. Watt, on being informed that his idea of applying the crank to steam engines had been patented by another, said—"In these circumstances I thought it better to accomplish the same end by other means, than to enter into litigation, and, by demolishing the patent, to lay the matter open to everybody."

In order to obtain a rotative motion from a rectilineal one, by some other means than the crank, Watt introduced what is now called the "*sun and planet*" *wheels*, for which he claimed several advantages over the crank, such as more rapid velocity of the fly-wheel, the fly-wheel thus being made to revolve with double the speed that it would in the case of the crank. It is, however, not so simple, while its construction makes it more expensive, and it is easily put out of order; it has now universally given place to the crank. There is a very unique old working model of this "sun and planet" motion, as applied to one of Watt's single-acting engines, and probably made in the end of last century, now in the College of Science and Arts, Glasgow.

IMPROVED FORM OF WATT'S DOUBLE-ACTING ENGINE.

7. Counter for recording the number of strokes of the engine.

8. Mercury U-tube gauges to ascertain the pressure of steam in the boiler as well as the vacuum in the condenser.

An improved form of Watt's double-acting rotatory engine is shown in the preceding illustration; students should compare this with Watt's engine, shown on page 13.

Hornblower's Engine.—Professor Goodeve says:—"There can be no question as to the fact that Watt invented the expansive working of steam, but, technically, he does not stand first in the records of the Patent Office, for he was anticipated by a patent of Hornblower for a single-acting pumping engine, which dates from the year 1781."

Hornblower, in his specification, says—1. "I use two vessels, in which the steam is to act, and which in other steam engines are generally called cylinders.

2. "I employ the steam after it has acted in the first vessel, to operate a second time in the other, by permitting it to expand

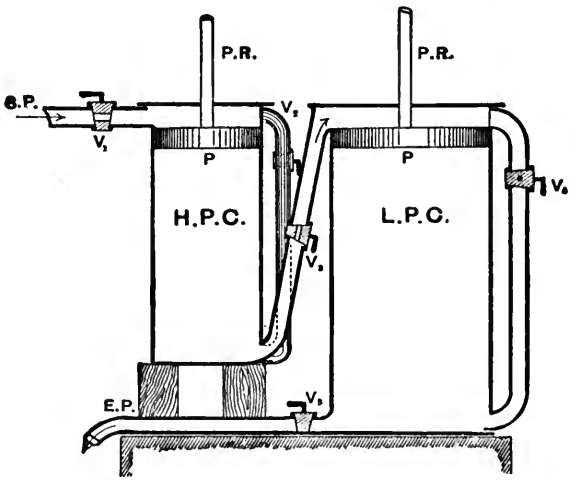

HORNBLOWER'S COMPOUND ENGINE, 1781.*

S P for Steam pipe from boiler.	V_1, V_3 for Steam cocks or valves.
H P C ,, High-pressure cylinder.	V_2, V_4 ,, Equilibrium ,,
L P C ,, Low- ,, ,,	V_5 ,, Exhaust ,,
E P ,, Exhaust pipe to condenser.	

* The drawing is taken from Stuart's *Descriptive History of the Steam Engine*, printed 1825.

itself, which I do by connecting the vessels together, and forming proper channels and apertures, whereby the steam shall occasionally go in and out of the said vessels.

3. "I condense the steam by causing it to pass in contact with metallic surfaces, whiie the water is applied to the opposite side."

To start Hornblower's Engine:—

First. Blow through (to clear all air and gases out of the cylinders and condenser), by opening all the steam and exhaust valves.

Second. Shut valves V_2 and V_4, and turn on the cold water to surface condenser. This creates a vacuum on the lower side of low-pressure piston, and permits the live steam from boiler to press on high-pressure piston, and at the same time the steam from below that piston to act on the low-pressure piston.

Third. Shut valves V_1, V_3, V_5, and open V_2, V_4. This allows the steam which pressed on the top of each piston to flow underneath them, and thus to create equilibrium when the weighted pump-rods pull them to the top again, ready for another start downwards.

It will be quite apparent to students of the present day, that Hornblower had actually devised not only the compound engine, but also the surface condenser (although his engine was but a single-acting one). He erected several engines on his plan, and, probably, the reason why they did not prove more economical than Watt's single-acting engines, was that the pressure of steam which could be generated in the boilers then constructed was too low. He applied to Parliament, in 1792, for an extension of his patent, but was refused; and it is curious to note the severe criticism of early writers on his invention, the principle of which is nowadays so fully recognised.*

The further improvements on the steam engine by Trevithick, Woolfe, M'Naughton, and others, will be noticed within proper place, in connection with locomotive and marine engines.

In order to complete this Early History of the Rise and Progress of the Steam Engine, we here give a list of a few of the more important English patents up to the beginning of this century.

* Stuart, in 1825, writes—"It must always be a subject of regret, that this ingenious man should have wasted the best part of his life, and ruined his fortune in a series of selfish attempts to copy Mr. Watt's inventions, without coming within the letter of his patent."

* See *The Engineer*, January 28. 1887, p. 70, for a letter discussing the above.

Chronological List of Early Patents.

For Improvements on the Steam Engine, and for Saving Fuel by the Construction of the Fire-Place and Boiler.

1698.

Thomas Savery, London.

Raising water by the elasticity of steam—Forming vacuum by condensing steam, to raise water by pressure of atmosphere.

1705.

Thomas Newcomen, John Cawley, Dartmouth, and Thomas Savery, London.

Condensing the steam introduced under a piston, and producing a reciprocating motion by attaching it to a lever.

1769.

James Watt, Glasgow.

Invention of the condenser—Use of oil and tallow instead of water—Enclosing cylinder in steam jacket—Moving piston by steam against a vacuum—Steam wheel.

1778.

Matthew Washbrough, Bristol.

Rotative from rectilineal motion.

1781.

John Steed, Lancashire.

Crank movement.

Jonathan Hornblower, Penryn.

Two cylinders.

1782.

James Watt, Birmingham.

Expansive engine—Six contrivances for regulating motion — Double impulse engine—Two cylinders—Toothed rack and sector to piston rod and beam—Semi-rotative engine—Steam wheel.

1784.

James Watt, Birmingham.

Rotative engine—Three parallel motions—Portable steam engine, and machinery for moving wheel carriages—Mode of working hammers and stampers — Improved hand gear—Mode of opening valves.

1785.

James Watt, Birmingham.

Furnace for consuming smoke.

1798.

Jonathan Hornblower, Penryn.

Rotative engine.

1802.

Richard Trevithick and Alexander Vivian, Cornwall.

High-pressure engine.

1804.

Arthur Woolfe, London.

Two cylinders and high-pressure steam boiler.

1805.

James M'Naughton, London.

Saving fuel.

LECTURE II.—QUESTIONS.

All sketches to be done free-hand.

1. Make an outline sketch of the cylinder, piston, and valves connected therewith, in Newcomen's engine; and by the side of it make a second drawing of the cylinder, piston, and valves, as altered by Watt. State briefly the nature of these alterations, and mention the additional parts necessary for the working of Watt's engine, but not shown in your drawing.

2. Explain, with a sketch, Watt's invention of a separate condenser and air pump, as applied to a single-acting steam engine. State the several improvements effected by Watt on Newcomen's engine.

3. What is the principle of the single-acting engine? Draw an outline section through the cylinder and valves, &c. Name the valves and explain their action, also the order of opening and shutting them when starting the engine.

4. In improving the old atmospheric engine, Watt laid down the rule that the cylinder in which the steam did its work should be kept as hot as the steam which entered it. What special provisions did he make for carrying out this rule? Explain your answer by referring to such sketches as may be required.

5. Name the three principal valves connected with the steam cylinder of a single-acting pumping engine. State which are opened and which closed—(1) when the piston is at the top of the cylinder and beginning to descend; (2) when the piston is at the bottom of the cylinder and beginning to ascend.

6. Describe, by a sketch and index of parts, Watt's double-acting engine, and point out the distinction between a single-acting and a double-acting engine. What is the object of the equilibrium valve in a single-acting engine? During what portion of the stroke is this valve open?

7. Enumerate the improvements introduced by Watt into his double-acting steam engine in 1784. Why is this engine so much more economical in steam than the old atmospheric engine?

8. Sketch a section through the cylinders of Hornblower's engine; give index of parts, and state how it is started. Why was the high-pressure cylinder of shorter stroke than the low-pressure one? Wherein is it an improvement on Watt's single-acting engine?

9. Make a vertical transverse section through the nozzles and valves of a Cornish pumping engine, showing the positions of the stop or regulating, steam, equilibrium, and exhaust valves respectively, together with the ports of the cylinder and the passages for the distribution of steam.

10. Explain, with the necessary sketches, the construction of the cataract of a Cornish pumping engine, and the manner in which it operates upon the valve or valves with which it is connected.

LECTURE III.

CONTENTS.—Temperature—Thermometry—Thermometer Tables—Pyrometry—Pyrometers of Different Kinds, with their Uses, Accuracy, and Ranges—Questions.

IT is necessary at the very outset of this section of our subject, to clearly understand what is meant by the different expressions:

1. The *temperature* of a body.
2. The *quantity of heat* in a body, and the *unit of heat.*
3. The *capacity for heat*, and the *specific heat* of a body.

Temperature.—*The temperature of a body is its thermal state considered with reference to its power of communicating heat to other bodies* (MAXWELL).

Two bodies are said to be at the *same* temperature, if, when placed in thermal communication, there is *no* tendency to the transfer of heat between them; if, however, one of them loses heat, and the other gains heat, that body which *gives out* heat, is said to have a *higher* temperature than that which receives heat.

Temperature, therefore, indicates the *quality* or *condition* of the heat in bodies, and is capable of greater or less intensity according to circumstances. It is measured by Thermometers and Pyrometers.

Thermometry.—Thermometry is the method of ascertaining temperatures, or the intensities of heat. The action of thermometers is based on the change of volume, to which bodies are subject with a change of temperature. Air, water, spirit, and mercurial thermometers are severally used under different circumstances, but the mercurial thermometer is the one most commonly employed by engineers. The mercurial thermometer consists of a stem or tube of glass, formed at one end into a bulb, to contain the mercury which expands into the tube. If the stem be of uniform bore, the expansion of the mercury being practically equal for equal increments of temperature, it follows that, if the scale be uniformly graduated, the divisions will indicate equal increments of temperature.

It was early ascertained that the freezing and the boiling points

of water at the normal pressure of the atmosphere (viz., 14·7 lbs. on the square inch), were constant temperatures, and advantage is taken of this physical property in order to graduate thermometers. The interval between these two fixed temperatures is in the case of the Fahrenheit thermometer (the one commonly used by English engineers) divided into 180 equal parts, termed degrees; in case of the Centigrade,* or standard French thermometer, into 100 equal parts, and in the Réaumur, or the thermometer used in Germany, Russia, &c., into 80 parts. The following comparative scale will render this quite clear:—

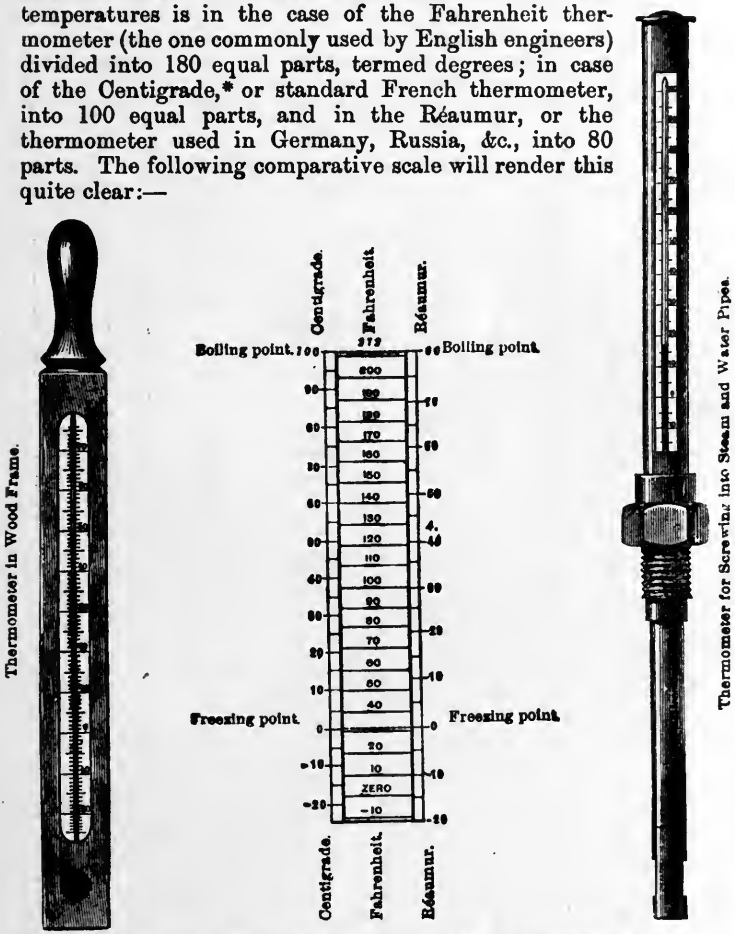

SCHAFFER AND BUDENBERG'S ENGINEER THERMOMETERS.

* The Centigrade thermometer is now used as the standard thermometer by all the best physicists, and students should familiarise themselves with readings taken by it, as well as with constants and tables to that scale.

COMPARISON OF DIFFERENT THERMOMETERS.

Fah.	Cent.	Réau.	Fah	Cent.	Réau.
392	200	160	320	160	128
390·20	199	159·20	318·20	159	127·20
388·40	198	158·40	316·40	158	126·40
386·60	197	157·60	314·60	157	125·60
384·80	196	156·80	312·80	156	124·80
383	195	156	311	155	124
381·20	194	155·20	309·20	154	123·20
379·40	193	154·40	307·40	153	122·40
377·60	192	153·60	305·60	152	121·60
375·80	191	152·80	303·80	151	120·80
374	190	152	302	150	120
372·20	189	151·20	300·20	149	119·20
370·40	188	150·40	298·40	148	118·40
368·60	187	149·60	296·60	147	117·60
366·80	186	148·80	294·80	146	116·80
365	185	148	293	145	116
363·20	184	147·20	291·20	144	115·20
361·40	183	146·40	289·40	143	114·40
359·60	182	145·60	287·60	142	113·60
357·80	181	144·80	285·80	141	112·80
356	180	144	284	140	112
354·20	179	143·20	282·20	139	111·20
352·40	178	142·40	280·40	138	110·40
350·60	177	141·60	278·60	137	109·60
348·80	176	140·80	276·80	136	108·80
347	175	140	275	135	108
345·20	174	139·20	273·20	134	107·20
343·40	173	138·40	271·40	133	106·40
341·60	172	137·60	269·60	132	105·60
339·80	171	136·80	267·80	131	104·80
338	170	136	266	130	104
336·20	169	135·20	264·20	129	103·20
334·40	168	134·40	262·40	128	102·40
332·60	167	133·60	260·60	127	101·60
330·80	166	132·80	258·80	126	100·80
329	165	132	257	125	100
327·20	164	131·20	255·20	124	99·20
325·40	163	130·40	253·40	123	98·40
323·60	162	129·60	251·60	122	97·60
321·80	161	128·80	249·80	121	96·80

COMPARISON OF DIFFERENT THERMOMETERS—*Continued.*

Fah.	Cent.	Réau.	Fah.	Cent	Réau.
248	120	96	192	88·8	71·1
246·20	119	95·20	191	88·3	70·6
244·40	118	94·40	190	87·7	70·2
242·60	117	93·60	189	87·2	69·7
240·80	116	92·80	188	86·6	69·3
239	115	92	187	86·1	68·8
237·20	114	91·20	186	85·5	68·4
235·40	113	90·40	185	85·0	68·0
233·60	112	89·60	184	84·4	67·5
231·80	111	88·80	183	83·8	67·1
230	110	88	182	83·3	66·6
228·20	109	87·20	181	82·7	66·2
226·40	108	86·40	180	82·2	65·7
224·60	107	85·60	179	81·6	65·3
222·80	106	84·80	178	81·1	64·8
221	105	84	177	80·5	64·4
219·20	104	83·20	176	80·0	64·0
217·40	103	82·40	175	79·4	63·5
215·60	102	81·60	174	78·8	63·1
213·80	101	80·80	173	78·3	62·6
...	...	...	172	77·7	62·2
212	100·0	80·0	171	77·2	61·7
211	99·4	79·6	170	76·6	61·3
210	98·9	79·1	169	76·1	60·8
209	98·3	78·7	168	75·5	60·4
208	97·8	78·2	167	75·0	60·0
207	97·2	77·8	166	74·4	59·5
206	96·7	77·3	165	73·8	59·1
205	96·1	76·9	164	73·3	58·6
204	95·6	76·4	163	72·7	58·2
203	95·0	76·0	162	72 2	57·7
202	94·4	75·6	161	71·6	57·3
201	93·9	75·1	160	71·1	56·8
200	93·3	74·7	159	70·5	56·4
199	92·8	74·2	158	70·0	56·0
198	92·2	73·8	157	69·4	55·5
197	91·7	73·3	156	68·8	55·1
196	91·1	72·9	155	68·3	54·6
195	90·6	72·4	154	67·7	54·2
194	90·0	72·0	153	67·2	53·7
193	89·4	71·5	152	66·6	53·3

COMPARISON OF DIFFERENT THERMOMETERS—*Continued.*

Fah.	Cent.	Réau.	Fah.	Cent.	Réau.
151	66·1	52·8	111	43·8	35·1
150	65·5	52·4	110	43·3	34·6
149	65·0	52·0	109	42·7	34·2
148	64·4	51·5	108	42·2	33·7
147	63·8	51·1	107	41·6	33·3
146	63·3	50·6	106	41·1	32·8
145	62·7	50·2	105	40·5	32·4
144	62·2	49·7	104	40·0	32·0
143	61·6	49·3	103	39·4	31·5
142	61·1	48·8	102	38·8	31·1
141	60·5	48·4	101	38·3	30·6
140	60·0	48·0	100	37·7	30·2
139	59·4	47·5	99	37·2	29·7
138	58·8	47·1	98	36·6	29·3
137	58·3	46·6	97	36·1	28·8
136	57·7	46·2	96	35·5	28·4
135	57·2	45·7	95	35·0	28·0
134	56·6	45·3	94	34·4	27·5
133	56·1	44·8	93	33·8	27·1
132	55·5	44·4	92	33·3	26·6
131	55·0	44·0	91	32·7	26·2
130	54·4	43·5	90	32·2	25·7
129	53·8	43·1	89	31·7	25·3
128	53·3	42·6	88	31·1	24·8
127	52·7	42·2	87	30·5	24·4
126	52·2	41·7	86	30·0	24·0
125	51·6	41·3	85	29·4	23·5
124	51·1	40·8	84	28·8	23·1
123	50·5	40·4	83	28·3	22·6
122	50·0	40·0	82	27·7	22·2
121	49·4	39·5	81	27·2	21·7
120	48·8	39·1	80	26·6	21·3
119	48·3	38·6	79	26·1	20·8
118	47·7	38·2	78	25·5	20·4
117	47·2	37·7	77	25·0	20·0
116	46·6	37·3	76	24·4	19·5
115	46·1	36·8	75	23·8	19·1
114	45·5	36·4	74	23·3	18·6
113	45·0	36·0	73	22·7	18·2
112	44·4	35·6	72	22·2	17·7

COMPARISON OF DIFFERENT THERMOMETERS—*Continued.*

Fah.	Cent.	Réau.	Fah.	Cent.	Réau.
71	21·6	17·3	51	10·5	8·4
70	21·1	16·8	50	10·0	8·0
69	20·5	16·4	49	9·4	7·5
68	20·0	16·0	48	8·8	7·1
67	19·4	15·5	47	8·3	6·6
66	18·8	15·1	46	7·7	6·2
65	18·3	14·6	45	7·2	5·7
64	17·7	14·2	44	6·6	5·3
63	17·2	13·7	43	6·1	4·8
62	16·6	13·3	42	5·5	4·4
61	16·1	12·8	41	5·0	4·0
60	15·5	12·4	40	4·4	3·5
59	15·0	12·0	39	3·8	3·1
58	14·4	11·5	38	3·3	2·6
57	13·8	11·1	37	2·7	2·2
56	13·3	10·6	36	2·2	1·7
55	12·7	10·2	35	1·6	1·3
54	12·2	9·7	34	1·1	0·8
53	11·6	9·3	33	0·5	0·4
52	11·1	8·8	32	0·0	0·0

It is certainly a great inconvenience to have to convert readings taken in one scale to that of another, but students should thoroughly master the simple proportion that exists between the different scales, so as to be independent of conversion tables.*

* Since freezing water, or melting ice, is marked on the different scales as follows:— . . . . . } 32° Fah. 0° Cent. 0° Réau.
and the boiling point of water . . . . . 212° Fah. 100° Cent. 80° Réau.
we obtain the proportion that exists between the scales by subtracting the freezing from the boiling points, thus } 180° Fah. 100° Cent. 80° Réau.

NOTE.—Temperatures as reckoned from the "absolute zero" will be referred to when we come to deal with Pressures and Volumes of Gases.

An easy process in mental arithmetic for converting degrees on the Fahrenheit scale into degrees on the Centigrade scale, and *vice versâ*, is as follows:—

For *Fah. degrees into Cent. degrees.*—Subtract 32 and divide by 2; then add $\frac{1}{10} + \frac{1}{100} + \frac{1}{1000}$ of the result.

Thus, for 60° F. we get $\left(\frac{60-32}{2}\right) = 14$. Then, $(14 + 1{\cdot}4 + {\cdot}14 + {\cdot}014) = 15{\cdot}5°$ C.

Again, for *Cent. degrees to Fah. degrees.*—Multiply by 2 and subtract $\frac{1}{10}$ of the result from the product and then add 32.

Thus, for 15° C. we get $(15 \times 2) - \frac{1}{10}(15 \times 2) + 32$; or, $(30 - 3 + 32) = 59°$ F.

Any desired number of similar examples may be worked out in this way, or by the ordinary proportion and fractional methods as detailed on the following page, and the answers checked by the foregoing tables.

Now, to convert a reading observed on the one scale to its corresponding value on either of the others—

Let F = Temperature Fahrenheit.
C = „ Centigrade.
R = „ Réaumur.

Then we observe that we must *subtract* 32° from the Fah. scale *before* applying the above proportion in converting it to the Cent. or to the Réau., but *add* 32, *after* applying the above proportion, in converting either the Cent. or the Réau. into the Fah. scale, as follows—

$$(F - 32) : C : R :: 180 : 100 : 80$$

or as $9 : 5 : 4$

$$\therefore \text{ Degrees } C = \frac{(F - 32)\ 5}{9}$$

$$\text{„ } \quad R = \frac{(F - 32)\ 4}{9}$$

$$\text{„ } \quad F = \frac{C \times 9}{5} + 32$$

$$\text{„ } \quad F = \frac{R \times 9}{4} + 32.$$

EXAMPLES.—Suppose the temperature of the feed water for a boiler is 102° Fah., find the corresponding temperature on the Cent. and Réau. scales:

By proportion— $9 : 5 :: (F - 32) : C$

$$\therefore C = \frac{(F - 32)\ 5}{9} = \frac{(102 - 32)\ 5}{9}$$

$$i.e., \quad C = \frac{70 \times 5}{9} = \frac{350}{9} = 38{\cdot}8° \text{ Cent.}$$

Again— $9 : 4 :: (F - 32) : R$

$$\therefore R = \frac{(F - 32)\,4}{9} = \frac{(102 - 32)\,4}{9} = \frac{280}{9} = 31{\cdot}1° \text{ Réau.}$$

Again, by proportion— $5 : 4 :: C : R$

But, $C = 38{\cdot}8°$, $\therefore R = 38{\cdot}8 \times \frac{4}{5} = 31{\cdot}1°$ Réau.

Pyrometry is the method of ascertaining the temperatures of very hot things, as distinguished from *thermometry*, which is really the method of ascertaining the temperatures of warm, hot, or boiling things. Of course, an exact point of demarcation cannot be drawn between the temperatures whereat instruments termed thermometers fail to register heat potential or intensity, and where the other kinds of instruments called pyrometers begin to be applied. In fact, as we shall see later on, the term thermometer is applied to the platinum resistance type of instrument, made for ascertaining temperatures from 14° to 2,500° F. However, the distinction between these two terms is by no means inconvenient or vague, since pyrometers have, generally speaking, been used to measure temperatures beyond the compass of the ordinary mercurial thermometer —*i.e.*, the boiling point of mercury—which is about 650° F. at atmospheric pressure. Further, the word *thermometer* is derived from the two Greek words, θερμός (*thermos*), signifying *warm*, hot, or boiling, and μέτρον (*metron*), *a measure*. In other words, a thermometer is an instrument for indicating the intensity of heat of any *warm* substance. The word pyrometer is also derived from two Greek words, πῦρ (*pyr*), signifying *fire* (or terribly hot), and μέτρον, *a measure*, as before. In other words, a pyrometer is the proper name for an instrument which indicates the intensity of the heat of *very hot substances*. The temperatures of high pressure superheated steam, gas and oil engine exploded mixtures, boiler and superheater furnaces and their flues, dust destructors, kilns, melting and annealing furnaces for different kinds of metals, as well as heating muffles for tempering steel, &c., are all measured by pyrometers. Of late, these instruments have been very much improved, both in regard to their accuracy and their lasting, reliable qualities. So much is this the case, that no truly accurate, scientific investigation into the complete performance of steam, gas or oil engines and electric power plants can be considered correct without their aid. Moreover, the iron, steel, and metal works metallurgist can determine, by their aid, the exact temperatures at which to stop certain operations, in order to obtain the best results; as also, the recently-discovered recalescence stages, or the hiatus positions on the rising and falling scales of temperature at which latent heat is absorbed or given out.

As a practical up-to-date example of the applications of high temperature platinum thermometers, we notice the following quotation from the Blue Book issued by the 1902-03 Naval Boilers Committee of the Admiralty:—"The temperatures of the flue gases were taken by Callendar Electric Thermometers,

and read on a galvanometer made by The Cambridge Scientific Instrument Company, for the special purpose of these trials. The whole temperature-taking apparatus worked satisfactorily throughout. The records were taken regularly from two to four times per hour, as shown in the (Blue Book) tables." It stands to reason, that, if you are able to obtain with comparative ease, and with reliable accuracy, a continuous permanent record of the temperatures of each and every inside and outside part of a set of boilers and engines, during a prolonged trial, you are thereby in a far better position to make a debit and credit balance sheet of the heat generated, usefully applied and wasted, than by the rough and ready methods employed a few years ago. In fact, the pyrometer should now be considered quite as indispensable to the careful, critical, expert engineer as the engine indicator and the dynamo voltmeter.

Pyrometers.—These instruments may be divided into six classes, the first three of which were described in the Author's *Elementary Manual of Heat Engines*. These will therefore be but very briefly noticed here, thus leaving time and space for confining our attention to the two more recent and accurate kinds of electrical resistance and thermo-electric instruments.

First.—Those in which the indications are based upon the change of dimensions of a particular body. For example, Wedgwood's *contracting clay and tapered groove pyrometer*, or Daniell's *expansion metal bar*, enclosed in a black lead case. Neither of these pyrometers are now considered sufficiently accurate.

Second.—Those in which a thin cylinder of platinum, copper, or iron, of known weight and specific heat, are first put into the hot place, whose temperature is to be ascertained, and then immersed into a known weight of water, when the rise in temperature of the latter, as indicated by a mercurial thermometer, enables the temperature of the hot place to be calculated. For example, Wilson's and Siemens' *Water* or *Calorimeter Pyrometers*, which are fairly accurate with care and when new, but they do not admit of more than one temperature being observed at any one time or of the continuous automatic recording of changeable temperatures. The thorough understanding of their construction, action, and manipulation is, however, of considerable educational value to the student.

Third.—Those which are based upon the previously-estimated melting or *fusing* points of pure *metals* or metallic alloys. These

can only be considered nowadays as rough-and-ready rule-of-thumb aids to workmen, who may also be able from experience to judge, approximately, the temperature of a retort or a furnace by the appearance or colour which it presents to their eyes. For example, dull red was, say, near 1,000° F.; cherry red, 1,450° F.; orange, 2,000° F.; white, 2,350° F.; and dazzling white, 2,700° F.

Fourth.—Those which are based on the fact, that saturated steam or a gas in direct contact with the liquid from which it is generated has the same temperature as the liquid. For example, Schäffer and Budenberg's "Thalpotasimeter or *Pressure Gauge Pyrometer,*" as explained in Lecture VII. They are made and graduated to act upon this principle from 100° to 1,400° Fah.

Fifth.—Those which depend on the electrical property of metals, that their resistance increases by a certain amount for a given rise in temperature—for example, Sir William Siemens' Electric Pyrometer and the Callendar-Griffiths *Platinum Resistance* Thermometers. These pyrometers, when connected to a good sensitive galvanometer and battery, are the most accurate and reliable instruments yet devised for indicating very high temperatures up to 2,500° Fah., as will be seen from the following detailed description of their principle, construction and action.

One great advantage of these thermometers arises from the fact that they can be placed to measure the temperature at a given point while the actual reading is transmitted to a convenient distance away. In recent years great advances have been made in steel manufacture and treatment, which depend for their success upon the exact determination of high temperatures; these advances would have been impossible but for the great development of electrical devices for measuring temperatures.

Sixth.—Those which depend upon the automatic production of an *electromotive force* or electrical difference of potential or pressure between the two junctions of two different metals connected in series, when these junctions are kept at different temperatures. For example, Le Chatelier's *Thermo-Electric Couple* of platinum to platinum plus 10 per cent. of rhodium, when connected in series with Sir W. C. Roberts-Austen's special device of moving-coil mirror galvanometer combined with a moving sensitised photo-paper, gives good results. Also, Becquerel's platinum to palladium couple, or the platinum to platinum-irridium junction, as used and enclosed in a specially-prepared and refractory porcelain tube by the Cambridge Scien-

tific Instrument Company, in conjunction with a Callendar Recorder, serve to give continuous and permanent records up to 2,000° Fah.

Electrical Pyrometer or Resistance Thermometer.—The most accurate and reliable way of measuring high temperatures is that known as the "platinum resistance method." It is the same in principle as the Siemens Electrical Pyrometer described in the previous editions of this book, but it differs therefrom in several important respects. It was first introduced by Professor Callendar in a paper read before the Royal Society in 1886, and is now supplied in the following form by the Cambridge Scientific Instrument Company :—

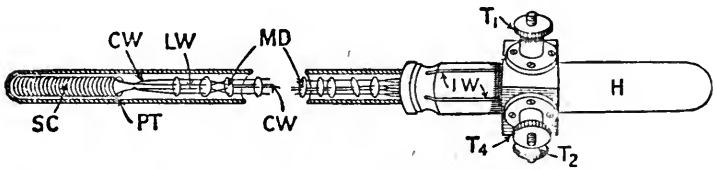

FIG. 1.—PLATINUM RESISTANCE THERMOMETER.

The platinum resistance thermometer consists of a spiral coil of fine platinum wire, the electrical resistance of which varies with the temperature to which it may be subjected. This coil of fine platinum wire, S C, is wound upon a mica frame and is protected from the action of fumes as well as mechanical damage by means of a glass or steel or porcelain tube, P T, according to the temperature to be ascertained. The ends of the coil are fused to two stout platinum or copper leading wires, L W, which are connected at their other ends to two of the four terminals, T_1, T_2, with which the instrument is provided at its cool or handle end, H. Since a change of temperature cannot be confined to the platinum spiral coil, S C, but also affects the leading wires, L W, in the porcelain tube, P T, the latter effect is balanced by constructing the thermometer with a pair of idle or compensating wires, C W. These compensating wires are short-circuited, as shown near the S C coil, and at the other end, H, they are connected respectively to the other two of the four terminals, T_3, T_4. The four leading-in wires are prevented from touching each other in the tube by passing them through holes punched in a set of separated mica discs, M D, which just fit the inside of the tube, P T, and thus, also prevent the passage of convection currents of air along the tube.

Now, referring to figs. 2 and 4, we see, that the terminals, T_3, T_4, of the compensating leading wires, C W, are connected to the opposite arm of the "Wheatstone Bridge" from that arm to which the terminals, T_1, T_2, of the spiral coil, S C, are connected. This arrangement eliminates any error which might be produced by the variation of the temperature of the wires connecting the thermometer with the indicating or recording instrument. The thermometers can thus be placed in positions where it would be impossible to read a mercury thermometer. At the same time, a considerable number of these thermometers may be inserted into different places, flues or furnaces, and distributed over a considerable area. By means of a switchboard, such as that shown in fig. 3, the readings from each of these thermometers may be rapidly and easily ascertained by means of one indicator.

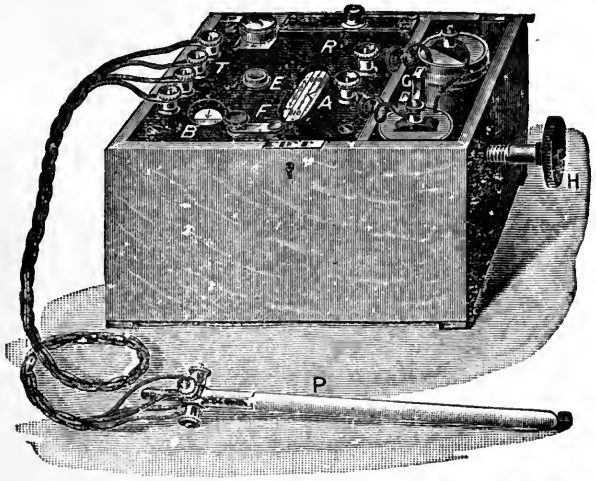

FIG. 2.—CALLENDAR AND GRIFFITH'S RESISTANCE THERMOMETER, P, CONNECTED TO A WHIPPLE TEMPERATURE INDICATOR.

There are two kinds of instruments used with these thermometers for obtaining temperatures, viz. :—Fig. 2, the Whipple Indicator, which reads the temperature directly in degrees Fahrenheit or Centigrade on a galvanometer scale, and Fig. 5, the Callendar Recorder, which not only shows the temperature at any time, but enables a continuous permanent record of the latter to be obtained.

The Whipple Temperature Indicator (fig. 2) consists of a portable moving coil galvanometer, combined with a Wheatstone

Bridge (fig. 4). The resistance of the platinum spiral coil, S C, in the thermometer is balanced by the fixed resistance, R, contained in the instrument, and by the position of the contact, C,

FIG. 3.—THERMOMETER SWITCHBOARD FOR ENABLING SEVERAL DIFFERENT TEMPERATURES TO BE TAKEN OR RECORDED.

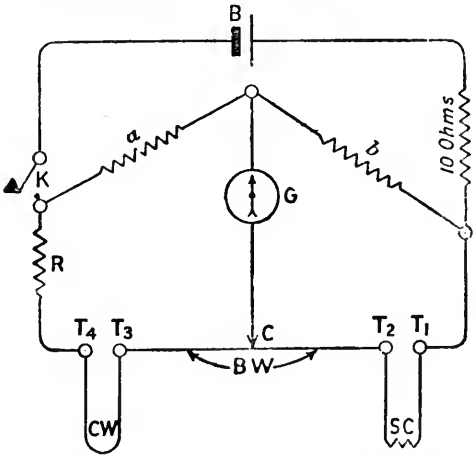

FIG. 4.—DIAGRAM OF CONNECTIONS AND RESISTANCES, &C., FOR THE WHIPPLE TEMPERATURE INDICATOR OF FIG. 2.

on the balancing wire, B W. The pointer of the galvanometer, G, shows when this balance has been obtained by remaining in the centre opposite to its zero or index mark.

Here, the resistances of the bridge arms, *a* and *b*, are each equal to 10 ohms, or any other convenient equal values. The third arm of the bridge is occupied by a fixed resistance, R, equal to that of the S C coil at 0° Cent. B is a battery of, say, two cells, as shown by fig. 2, with a key, K, for bringing it into action through a resistance of 10 ohms. The balancing wire, B W, is wound in the hollow of a screw thread cut upon an ebonite drum, and the galvanometer contact, C, can be moved round this wire by means of a milled head, H (fig. 2), until a balance has been obtained, as shown by the galvanometer pointer returning to zero. The temperature of S C can then be read off directly from the scale, A (fig. 2), which is connected to the galvanometer contact, C.

FIG. 5.—CALLENDAR RECORDER, WITH ITS WHEATSTONE BRIDGE, &c.

Callendar Recorder.—In the Callendar Recorder (fig. 5), the method just described is applied, but here the galvanometer contact, C, acts by means of a relay upon an automatically-acting recording pen, which produces a record of temperatures shown by fig. 6. The principle of the recording mechanism is similar to that used in many other instruments, such as the barograph, recording ammeters, and voltmeters. There is the usual cylinder covered with squared paper, divided lengthwise into units of

time and vertically into degrees temperature. It is revolved by clockwork once in two or twenty-four hours. The motion of the pen of the instrument is controlled by electromagnets, whilst the latter are actuated by the differences in the resistances of the bridge balancing wire, B W, on the two sides of the galvanometer contact, C, as shown in fig. 4.

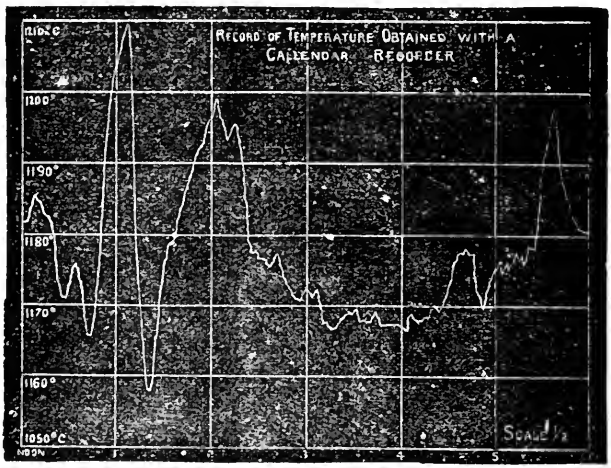

FIG. 6.—TEMPERATURE SHEET, AS PRODUCED BY THE CALLENDAR RECORDER.

Thermo-electric Thermometers or Pyrometers.—This system of measuring high temperatures was prominently brought before the Institution of Mechanical Engineers and its "Alloys Research Committee," by the late Professor Sir W. C. Roberts-Austen, and is said to be largely used on the Continent for smelting and foundry work.* It is based on the fact, that if two pieces of different kinds of metals are joined together at both ends, and the two junctions are kept at different temperatures, then a difference of electric potential is produced between the two junctions. Consequently, an electric current will pass through the two metals in series. The metals usually employed are pure platinum and some alloy of platinum, such as platinum-rhodium or platinum-iridium. These metals are called the "couple." They are fused or twisted together at one end, and

* See the *Proceedings* of this Institution for April, 1893, for description, with illustrations, of his Thermo-electric Recording Pyrometer.

protected by a tube in the same manner as those described for the previous thermometer. The other end of the thermo-couple should be kept as cool as possible and in circuit with some form of galvanometer through which the thermo-electric current passes. This galvanometer may be calibrated to read directly in degrees of temperature. It is also useful to have it calibrated in millivolts, as it can then be standardised at intervals. In the thermo-electric method of measuring temperature, it is advisable to have the galvanometer as close as possible to the couple; for, if long leads are employed, their resistance may introduce an error. The author has found, that one great difficulty often arises with these high-temperature pyrometers, when the heat exceeds 1,800° to 2,000° Fah., from the porcelain tubes breaking, cracking, or bending. In the case of using them for melted brass, the fumes or gases arising therefrom, pass through the cracks or mica lining, and soon destroy the thermo-electric wires and their junctions. He understands, however, that the Cambridge Scientific Instrument Company have recently overcome this difficulty, and are now prepared to submit their instruments to temperatures which were previously considered injurious to accurate pyrometers.

LECTURE III.—QUESTIONS.

1. Define the temperature of a body. What two natural phenomena have been employed to determine two points of reference in the scale of thermometers? And why?

2. Convert (−461·2° F.), 0° F., 9° F., 32° F., 39·1° F., 60° F., 75° F., 98° F., and 212° F. into degrees on the Cent. scale. Mention what each of these temperatures relate to or are frequently used for.

3. Convert (−274° C.), 0° C., 4° C., 15·5° C., 24° C., 36·6° C., and 100° C. into degrees on the Fah. scale. Mention what each of these temperatures relate to or are frequently used for.

4. Compare the Fah., Cent., and Réau. scales. A Cent. thermometer indicates 15°; show by proportion (in full) how you find what are the corresponding readings in the Fah. and Réau. scales. *Ans.* 59° F.; 12° R.

5. Zinc boils at 1,204° F., mercury at 676° F.; change these readings to Cent. (show your work in full). *Ans.* 651° C. and 358° C.

6. Explain the short methods of converting degrees Fah. into degrees Cent. given in the footnote immediately after the tables in this lecture, and by these convert 200° Fah. into Cent. and 100° Cent. into Fah.

7. Define thermometry and pyrometry. Give their derivations, and explain why the latter term should be employed when referring to temperatures above boiling mercury.

8. Mention the six classes of pyrometers, naming an example of each. State in what cases and why the exact measurement of high temperatures is of value to engineers.

9. Sketch and describe concisely the construction and action of a good platinum resistance pyrometer. How is it used to obtain several different temperatures in different places at the same time?

10. Explain the construction and action of a thermo-electric couple. How is it applied to indicate and to record high temperatures?

11. Sketch and describe the construction and action of an automatic recording apparatus for use with either the platinum resistance or thermo-electric couple pyrometer.

LECTURE IV.

CONTENTS.—Quantity of Heat—British and French Thermal Units—Calorimetry—Bunsen's Calorimeter—Method of Mixture—Definitions of Thermal Capacity and Specific Heat—Examples I. to VI. on Gain and Loss of Heat by Substances, &c.—Specific Heat Table—Thomson's Coal Calorimeter—Rosenhain Form of Thomson Coal Calorimeter—Gas and Oil Calorimeters—Calorific Values of Coal and Gases from Analysis—Specific Heats of Gases and of Steam—Questions.

IN the previous lecture the attention of the student was confined to the *first* of the expressions with which it started—viz., the *temperature* of a body and how it is measured. In this lecture the *second* and *third* expressions, *quantity of heat* and *capacity for heat*, will be dealt with.

Quantity of Heat.—The method of measuring the *quantity of heat* in a body is termed Calorimetry,* and the value of that quantity is found in *units of heat*. The expression *quantity of heat* in a body, not only involves a knowledge of the *temperature*, but also of the *capacity for heat* of the body. In fact, the *quantity of heat* in a body is simply the product of its *capacity for heat* and the *temperature* of the body. We have a precise analogy in heat energy, to the way in which two other familiar kinds of energy are estimated—viz., mechanical energy and electrical energy. In the case of mechanical energy, the *quantity of work* put into a body is the product of its *capacity for work* or weight and its *displacement* or distance through which it is moved. In the same way, the *quantity of electricity* put into a body is the product of its *capacity for electricity* and its increase of *potential*. Also, the *quantity of heat* put into a body is its *capacity for heat* into its rise in *temperature*. These three forms of energy are convertible, and may be expressed in ft.-lbs. or units of work.

Units of Heat.—To be able to compare different quantities of heat, we must first fix upon a standard substance in a constant condition, and note the effect of raising a unit mass thereof, through our unit of temperature. The most convenient substance is found to be pure water at its maximum density point, and our unit of mass is 1 lb., whilst our unit of temperature is 1° Fah. Since the capacity for heat of water varies so little from 32° to 100° F., any reference to its maximum density point, 39·1° F., or to any other temperature, may be omitted in Engineering questions. Hence, we define the *British Unit of Heat*:—

The **British Thermal Unit** (symbol, B.T.U.) *is the quantity of heat required to raise* 1 *lb. of water* 1° *Fah.*

* The French Unit of Heat is called the *Calorie*, from the Latin word *Călor*, signifying warmth or heat. It is the quantity of heat required to raise 1 kilogramme of water 1° Cent. It is equal to 3·968 (roughly 4) British units of heat. For small physical and electrical quantities of heat $\frac{1}{1000}$th of this—viz., the small or C.G.S. *Calorie*, or gramme-degree Cent. (gm. 1° C.)—is now universally used as the standard unit of heat.

Calorimetry.—The Ice Calorimeter of Laplace and Lavoisier consisted of three thin copper vessels of different sizes, so as to permit one being placed inside another. The outer and middle one were packed with broken ice, and were furnished with drain pipes and cocks by which to run off the water from the ice as it became melted. The third or inner vessel held the body to be experimented upon. Although this apparatus furnished good results in the hands of the inventors, it is liable to lead to erroneous determinations, owing to the water produced in the middle vessel adhering to the broken ice, instead of draining completely away.

An improved form of ice calorimeter, designed by Bunsen, is illustrated in the following figure, and is thoroughly reliable in the hands of a good experimeter.

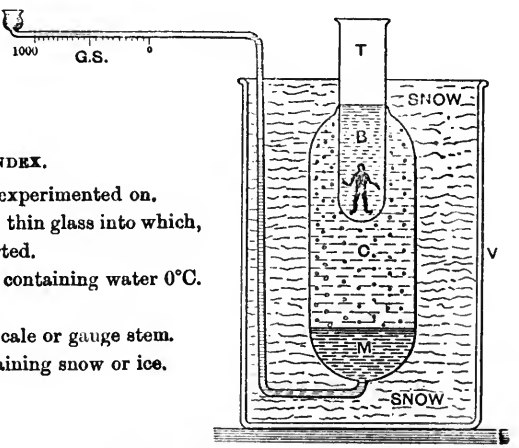

INDEX.

B for Body to be experimented on.
T ,, Test tube of thin glass into which, B, is inserted.
C ,, Calorimeter containing water 0°C.
M ,, Mercury.
G S ,, Graduated scale or gauge stem.
V ,, Vessel containing snow or ice.

BUNSEN'S ICE CALORIMETER.

The body, B, of known weight, which is to give off the quantity of heat to be measured, is first heated in a test tube held in a current of steam of known temperature. It is then dropped quickly into the very thin, dry, clean test tube, T, which is now corked with cotton wool. This test tube is surrounded with solid ice contained in the calorimeter, C. In the bottom of the calorimeter there is a quantity of mercury, M, which extends up through the thin tube to the graduated scale, G S.

The vessel, V, is packed either with newly fallen snow, free from dust particles, or with ice. The ice in the calorimeter is made from distilled water, from which every trace of air has been expelled. If there was air in the water, the process of freezing would expel it, and produce bubbles at the top of the calorimeter, which would vitiate the results, for the accuracy of the test depends upon observing the diminution of the volume of the ice in the calorimeter, C, when a portion of it becomes melted by the heat passing from the body, B. This diminution of volume of a portion of the ice is indicated by the free end of the column of mercury at the graduated scale, G S, moving inwards. The value of these gradations having been previously ascertained, the quantity of ice melted, and consequently the number of units of heat that pass from the body, B, when it has fallen to the temperature of the ice, are easily ascertained.

The value of the gradations on the scale, G S, may be approximately ascertained, by placing a known weight of water at a known temperature in the test tube, T, instead of the body, B, and noting the number of divisions which the free end of the mercury passes inwards, when the water in the test tube has fallen to the temperature of the ice in the calorimeter.

Example I.—Suppose 1 lb. of water at 212° F. to have been placed in the test tube, T, and that, when its temperature had fallen to the temperature of the ice, 32° F., the free end of the mercury at the scale had moved inwards from 0 to 32 divisions on the scale. Now, by placing 1 lb. of lead at 212° F. in the test tube, T, and waiting until its temperature fell to 32° F., if we found that the free end of the mercury only moved inwards by 1 division, we would conclude that the quantity of heat which had passed from the 1 lb. of lead was only the $\frac{1}{32}$ part (·031) of what had previously passed from the water in the test tube to the ice in the calorimeter, under precisely similar circumstances.

The capacity for heat of lead, or its thermal capacity, is therefore $\frac{1}{32}$, or ·031 that of the standard substance—viz., water.

Method of Mixture.—This method depends on the quantity of heat which escapes from one body, increasing the temperature of another body.

To illustrate this method, again take the case of lead. Weigh out 1 lb. of sheet lead, roll it into an open spiral, and attach it to a string. Now, dip the lead into a pot of freely boiling water until it has attained the temperature of the water. While this is going on weigh out a pound of cold water, and ascertain its temperature with a thermometer; say it is 47° F. Then lift the lead from the boiling water, and, while holding it by the string

in the steam rising from the water, allow all water to drop from it, and immerse it quickly in the cold water vessel, keeping it moving by means of the string, so as to bring it intimately into contact with every portion of the water, as shown in the following figure, where, L, is the lead, and, T, the thermometer. Observe the gradual rise in temperature of the water due to the heat passing from the lead, note the point at which it ceases to rise, and suppose that to be 52°F. We have thus ascertained data, from which we may calculate the relative capacities for heat of lead and water, if none of the heat from the lead was given to any other body than to the water.

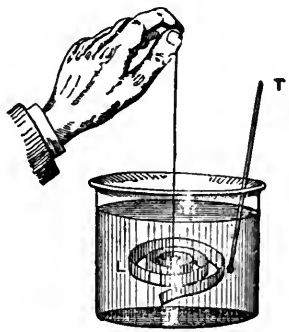

Thus—The diminution in temperature of the lead from 212° to 52° = 160°; the increase in temperature of the water from 47° to 52° = 5°.

Therefore, since—

The Loss of Heat from the one substance = the Gain of Heat by the other.

Or, the heat from 1 lb. of lead falling 160° = the heat imparted to 1 lb. of water raised 5°.

$$\therefore \frac{\text{The units of heat in 1 lb. of lead}}{\text{The units of heat in 1 lb. of water}} = \frac{5}{160} = \frac{1}{32}.$$

In other words, the capacity for heat of lead is only $\frac{1}{32}$ part that of water, or the same quantity of heat would raise 1 lb. of lead through 32 times as many degrees as it would 1 lb. of water.

Thermal Capacity.—*The capacity for heat, or the thermal capacity of a body, is the quantity of heat required to raise its temperature by one degree.*

The thermal capacity of *unit mass* of a substance is called the *specific heat* of the substance. Hence the definition:—

Specific Heat.—*The specific heat of a substance is the quantity of heat required to raise unit mass of it by one degree in temperature.*

This shows, that the specific heat of water (which is taken as the standard substance) is the same as the "British Unit of Heat" when the temperature of the water is at its maximum density point. The specific heat of water, however, increases

slightly as its temperature is raised, by a mean of $\frac{1}{2}$ of 1 per cent. between the freezing and the boiling points. It is, however, convenient to consider that a *British unit of heat* and the *unit of specific heat* are identical. The specific heat of a substance does not depend upon the temperature scale employed, since the quantity of heat will be measured in units depending upon the temperature scale. We might define specific heat as the amount of heat required to raise a given mass of a substance through a given temperature range divided by that required to raise the same mass of water through the same range.

The above definition also shows, that the *specific heat* of a substance, is identical with the *ratio* of the *thermal capacity* of any mass of that substance to an equal mass of water. For example, look at the following table of "Specific Heat of Substances," and we see, that the specific heat of ice is (fully) ·5. This means that the capacity for heat of ice at 32° F. is ·5 to 1, or *half* that of an equal mass of water. Again, we see from the same table that the specific heat of lead is ·031. This means (as we have already shown), that the ratio of the thermal capacity of a mass of lead (say 1 lb.) to the same mass of water (viz., 1 lb.) is $\frac{\cdot 031}{1} = \frac{1}{32}$. In other words, a definite weight of water will absorb 32 times the same number of units of heat that the same weight of lead will absorb, in order that the temperature of each may be raised by the same number of degrees.

It is also clear, that if the mass of a body be multiplied by its specific heat and then by the number of degrees of temperature to which the body has been raised or lowered, the combined product must be the total heat units imparted to or withdrawn from the body. Hence:—

Let m = Mass of a substance in lbs.
H_σ = Specific heat (or heat specific) of the substance.
H_T = Total heat units required to raise the temperature of the substance from $t_1°$ to $t_2°$.
Then, $H_T = m H_\sigma (t_2 - t_1)$ *units of heat*, to raise the temperature of the substance from $t_1°$ to $t_2°$ or to lower it from $t_2°$ to $t_1°$.

From this statement and formula it is clear, that if one substance receives a certain quantity of heat from another substance, and that this transfer of heat from the one to the other is the only heat which the one gains and the other loses, then:—

The Gain of Heat by the one Substance } = { *The Loss of Heat by the other Substance*

Hence, Let m_1 and m_2 = Masses of the two substances.
H_{σ_1} and H_{σ_2} = Specific heats of the two substances.
t_1 = Original temperature of m_1.
t_2 = " " m_2.
t_3 = Final temperature of m_1.
t_4 = " " m_2.

Then, supposing that the mass, m_1, receives heat from the mass, m_2, we get :—

$$m_1 H_{\sigma_1}(t_3 - t_1) = m_2 H_{\sigma_2}(t_2 - t_4).$$

If, however, both arrive at the same final temperature, t_3, then,

$$m_1 H_{\sigma_1}(t_3 - t_1) = m_2 H_{\sigma_2}(t_2 - t_3).$$

EXAMPLE II.—We may now apply the knowledge we have gained in this lecture to proving the rule for using Wilson's Pyrometer, as given in our *Manual*. Observe, Wilson plunges a known weight of platinum (for the sake of illustration, assume it to be 1 lb.) at an *unknown* temperature, t_1, into double its weight of water (say 2 lbs.), and notes the rise in temperature, t_2° to t_3°, from which he calculates the original temperature, t_1°, of the platinum, and, therefore, of the furnace from which it had been taken. Referring to the following table, we see that the specific heat of platinum, $H_{\sigma_1} = \cdot0324$, and that of water, the standard substance, $H_{\sigma_2} = 1$, we get the following answer :—

Loss of Heat from Platinum = Gain of Heat by Water.

But, *loss* of heat from 1 lb. of platinum $= m_1 \times H_{\sigma_1} \times (t_1 - t_3)$.
" " " $= 1 \times \cdot0324 \times (t_1^\circ - t_3^\circ)$.
And *gain* of heat by 2 lbs. of water $= m_2 \times H_{\sigma_2} \times (t_3 - t_2)$.
" " " $= 2 \times 1 \times (t_3^\circ - t_2^\circ)$.

$$\therefore \quad 1 \times \cdot0324 \times (t_1^\circ - t_3^\circ) = 2 \times 1 \times (t_3^\circ - t_2^\circ).$$

$$\therefore \quad t_1^\circ - t_3^\circ = \frac{2(t_3^\circ - t_2^\circ)}{\cdot0324} = 62\,(t_3^\circ - t_2^\circ).$$

$$\therefore \quad t_1^\circ = 62\,(t_3^\circ - t_2^\circ) + t_3.$$

Or, *The temperature of the platinum* = { *62 times the rise in temp. of the water + the final temp. of the water.*

EXAMPLE III.—2 kilogrammes of mercury at 100° C. are poured into 2·2 lbs. of water at 10° C., what is the temperature of the mixture?

ANSWER—
Let t_1° = Temperature of the mercury.
t_2° = " of water before experiment.
t_3° = " after mixing.

m_1 = Mass of mercury = 2 kilogrammes.
m_2 = ,, water = 2·2 lbs. or 1 kilogramme.
H_{σ_1} = Specific heat of mercury = ·033 (by next table).
H_{σ_2} = ,, water = 1 (,,).

Then, *Loss of Heat from Mercury = Gain of Heat by Water.*

But, *loss* of heat from 2 kilos. of mercury $= m_1 \times H_{\sigma_1} \times (t_1^\circ - t_3^\circ)$.
And *gain* ,, by 1 ,, water $= m_2 \times H_{\sigma_2} \times (t_3^\circ - t_2^\circ)$.

$$\therefore \quad m_1 \times H_{\sigma_1} \times (t_1^\circ - t_3^\circ) = m_2 \times H_{\sigma_2} \times (t_3^\circ - t_2^\circ).$$
$$2 \times \cdot 033 \times (100 - t_3^\circ) = 1 \times 1 \times (t_3^\circ - 10^\circ).$$
$$6 \cdot 6 - \cdot 066\, t_3^\circ = t_3^\circ - 10^\circ.$$
$$6 \cdot 6 + 10 = t_3^\circ + \cdot 066\, t_3^\circ.$$
$$16 \cdot 6 = 1 \cdot 066\, t_3^\circ.$$
$$t_3^\circ = 16 \cdot 6 \div 1 \cdot 066 = 15 \cdot 5^\circ \text{ C}.$$

SPECIFIC HEAT OF SUBSTANCES.

BY REGNAULT AND OTHERS.

Water at 39·1° F.,	1·000	Silver,	·057
,, 212° F.,	1·013	Platinum, sheet,	·0324
Ice at 32°,	·504	,, spongy at 952° F.,	·035
Steam at 212°,	·480	Coal,	·240
Mercury,	·033	Coke,	·200
Iron, cast,	·130	Olive oil,	·310
,, wrought,	·113	Air,	·238
Steel, soft,	·116	Carbonic oxide,	·248
Copper,	·095	,, acid,	·217
Lead,	·031	Hydrogen,	3·404
Zinc,	·093	Oxygen,	·218
Tin,	·057	Nitrogen,	·244

Note 1.—Students will find it to be both interesting and instructive to try and verify (even roughly), by means of a home-made Bunsen calorimeter, any of the specific heats in the above table. Before doing so, however, it will be advisable to study the detailed description of how to ascertain with great accuracy the complete constant for the gauge tube graduated scale, G S, and then for the correction due to the simultaneous melting and forming of ice in the calorimeter, C, owing to its being surrounded by a freezing mixture (see previous figure and former editions of this book).

Note 2.—The specific heat of an elementary solid (pure body) is inversely as its atomic weight, or the specific heat multiplied by the atomic weight is a constant quantity.

Coal Calorimeters.—It is very important that engineers should have a simple, ready and accurate instrument, whereby they may test the correct values of the heat-producing qualities of different kinds of coal. In all complete and exact trials of steam plant, it is of the utmost importance to ascertain the pounds of water converted into steam per lb. of coal burned in the furnace. This proportion does not, however, give a definite idea of the actual units per lb. of coal consumed, since an indefinite amount of the total heat evolved may have been lost through radiation and conduction to surrounding bodies, as well as through the flues and chimney. In order to find out whether the boiler is doing its duty, it is necessary to test samples of the coal independently of the boiler. This can only be done by the aid of a good calorimeter.

William Thomson's Coal Calorimeter.—A coal calorimeter which avoids the inaccuracies of the earlier forms has been designed by Mr. William Thomson. A diagrammatic or educational view of his apparatus,

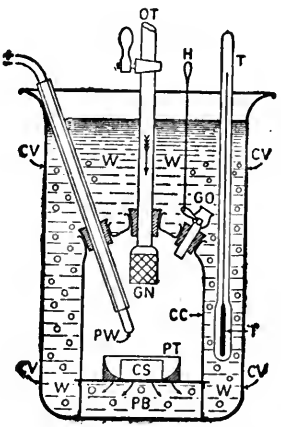

DIAGRAM OF THE WILLIAM THOMSON COAL CALORIMETER OR FUEL TESTER.

INDEX TO PARTS.

C V	for Calorimeter vessel.	C S	for Coal sample.
W	,, Water.	P W	,, Platinum igniting wire.
T	,, Thermometer.	+, −	,, Leads to battery.
C C	,, Combustion chamber.	O T	,, Oxygen tube.
P B	,, Perforated base.	G N	,, Gauze nozzle.
P T	,, Porcelain tray.	G O	,, Gas outlet.

with an index to parts, is shown by the figure:—It consists of a glass vessel, C V, into which is placed a Woulff's bottomless three-necked bottle, resting upon a perforated metal or porcelain base. On this base is placed a porcelain or platinum tray, P T, containing the coal sample, C S, to be burned. This sample is ignited by pushing down the tube containing the + and − leading wires from an ordinary battery. The lower ends of these wires are connected to a platinum igniting wire, P W. Whenever this wire comes into contact with C S, the battery circuit is closed and the platinum wire becomes white hot, thus setting fire to the sample whose calorific value has to be ascertained. In order to

keep up rapid combustion and to ensure that every particle of the sample is thoroughly consumed, a flow of oxygen under pressure is turned on to C S from the oxygen tube, O T. The lower end of this tube terminates in a cylindrical wire gauze nozzle, G N, to spread the oxygen and thus prevent the too-rapid breaking-up or splitting of the sample. When the sample has been apparently consumed, as seen through the surrounding glass vessel, C V, containing the water, W, and the combustion chamber, C C, it is finally stirred up by the platinum wire, P W, in order to burn the very last iota. Then, the supply of oxygen is turned off and the gas outlet tube, G O, is opened by pulling up the handle, H, connected by a metal wire to this outlet cock, as shown by the accompanying figure. This permits the head of water, W, in C V to press through the perforated base, P B, and to fill the combustion chamber, C C, so as to bring the water into intimate contact with the gaseous products of combustion (which are shown rising as bubbles through the water), as well as with everything that has been heated by the combustion of the small coal sample.

The gradual rise in temperature of the whole of the water, W, is now noted by taking readings on the sensitive thermometer, T, which is graduated to about half-an-inch per degree Fah. into tenths and one-hundredths of a degree. The times in seconds are also noted by a stop watch, so that the *highest mean temperature* reached by the water may be very exactly determined. This temperature is taken as the value, with which to make the following simple calculation of the *calorific value*, Cv, of the coal sample in British thermal units (B.T.U.). If all the heat which is generated by the burning of the sample be communicated equally throughout to the water and to the several things contained in it, and, if the highest mean temperature to which these attain be exactly noted, as well as the equivalent value in "grammes of water." Then:—

The Heat Units given out by Sample = The Heat Units absorbed by Water, &c.

Or, $$Cv \times w = W \times t,$$

i.e., The calorific value, $Cv = \frac{W\,t}{w}$ gm.-deg.-Fah.

Where, w = Weight of coal sample in grammes.

W = Weight of water + equivalent weight of water of the other things in it in grammes.

t = Maximum rise of mean temperature of W in, say, degrees *Fah.*

Note.—The following table gives the figures obtained for one of the William Thomson Coal Calorimeters, as used for the following calculations:—

Material Used.	Weight in Grammes.	Specific Heat of Material.	Equivalent to Grammes of Water.
Glass of beaker = 7·812 ozs.,	221·472	·1977	43·784
Glass bell,	48·015	·1977	9·492
Brass,	106·017	·09391	9·956
Iron,	12·993	·11379	1·478
Platinum,	7·3496	·03244	·238
Clay support,	16·875	·1977	3·336
India-rubber,	1·184	·2	·237
Mercury,	27·192	·0333	·905
Thermometer glass,	4·161	·1977	·822
Copper gauze,	27·122	·09515	2·581
Water employed,	..	..	2,000·000
Total material heated in the calorimeter equivalent to water,			2,072·829

EXAMPLE IV.—Suppose that the coal sample, w, weighed 2 grammes, that W, the weight of water, and the other things in it had the equivalent shown by the previous footnote—viz., 2,072·8 grammes—and that the mean maximum rise of temperature of W was 12·7° Fah. ; find the calorific value, C_V, of the coal sample.

From the previous equation and formula, and substituting the given values, we get—

$$C_V = \frac{W t}{w}.$$

Or,
$$C_V = \frac{2072{\cdot}8 \times 12{\cdot}7}{2}.$$

$\therefore$ $C_V = 13{,}162$ *gramme degrees Fah.*

Hence, it follows that each gramme of such coal could give out 13,162 gm.-Fah.° of heat; or, that *each lb.* of such coal if perfectly burned in a boiler furnace, and if the *whole of its heat of combustion* were transmitted to the water in the boiler, the water would receive 13,162 lb.-Fah.°, or B.T.U. of heat.

Now, if it be desired to know what weight of boiler water this quantity of heat would evaporate, or convert into steam at atmospheric pressure, we have only to know that water boils at 212° Fah. under these circumstances, and that 966 B.T.U. are absorbed in converting every lb. of the water into steam; or, that the latent heat of steam (as will be seen later on) is 966 B.T.U. Hence:—

$$\text{Weight of water evaporated at } 212° \text{ F.} = \frac{13{,}162}{966} = 13{\cdot}6 \textit{ lbs.}$$

Of course, we do not get this splendid result in actual daily practice, even from the very best Welsh coal and with the most perfect boiler ever made, but it is the aim and object of every good engineer to get as near to it as he can. In most cases, as we shall see later on, 10 to 12 lbs. of water evaporated from and at 212 Fah. per lb. of the good coal, having a calorific value of about 14,000 B.T.U., is considered good work.

The Rosenhain Form of Thomson Coal Calorimeter.—The student should now have no difficulty in understanding the construction and action of the form of this instrument which is made by the Cambridge Scientific Instrument-Making Company, by aid of the following figures, index to parts, and concise description, as it involves no further principles than those just enunciated.

Construction and Manipulation of the Instrument.—As in the former apparatus, this instrument consists essentially of two main parts, viz. :—A polished brass box (instead of a deep glass jar), with a bottom and two diametrically opposite glass windows. This forms the containing vessel, C V, holding the water, W, and the combustion chamber, C C, in which the coal sample, C S, is burned. The combustion chamber, C C, consists of an ordinary glass lamp-chimney, closed at the top and the bottom by brass clamping plates, $C P_1$ and $C P_2$, with rubber washers, R W.

When the platinum or porcelain tray, P T, containing the coal sample, C S, has been placed on the plate, $C P_2$, and the three upright rods, U R, have been inserted into their lugholes in $C P_2$, then C C is put upon the lower R W, and the upper plate, $C P_1$, with its attachments, is laid on the upper end of the combustion chamber. Three brass nuts, N, are then screwed upon the three upright rods, thus drawing the two end clamping plates firmly into contact with the top and bottom rubber washers, R W.

A ball joint, B J, containing a stuffing-box, S B, is mounted on the upper plate, $C P_1$. Through this stuffing-box there passes a leading wire tube, L T, containing two wires connected at the upper end of W_1, W_2 (as shown by the first outside view), with the + and — terminals of a suitable electric battery, giving about 6 volts, which is used to render incandescent the platinum wire, P W, connected to the lower clips of W_1, W_2. This platinum wire is for igniting the coal sample, C S; and, as will be readily understood, it can be pushed down or pulled up through S B, so as to bring it into contact with C S, or to remove it therefrom.

The upper plate, $C P_1$, also carries an oxygen tube, O T, connected by its outer end to an oxygen supply under pressure. At its lower end it is covered by a wire gauze nozzle, W N, for the purpose of supplying and gently distributing the necessary oxygen to the sample (when the latter has been ignited by the heated platinum wire), in order to thoroughly burn up the coal or other fuel under test, without fracture, as previously explained.

The upper plate, $C P_1$, also carries a gas outlet, G O, which is worked by a cock and handle, H, so that, if it be desired to let the water, W, into the combustion chamber, C C, through the bottom inlet or outlet, B O, after the sample has been consumed and after the oxygen is cut off, a little of the gas

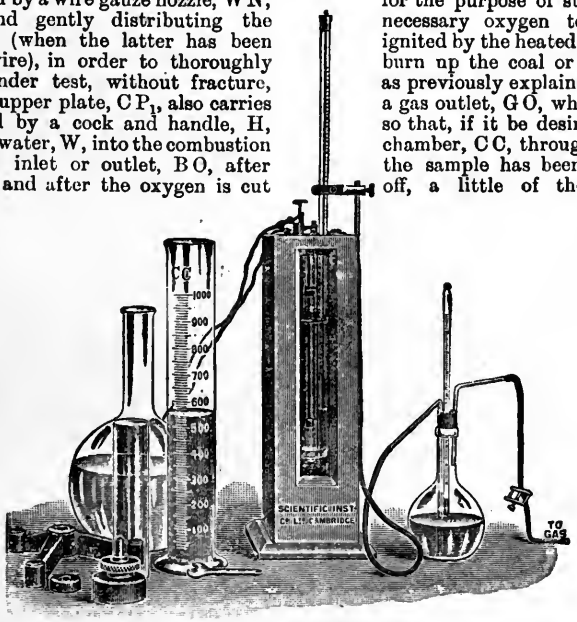

ROSENHAIN FORM OF THOMSON'S COAL CALORIMETER.
Made by the Cambridge Scientific Instrument Company.
Connected up to Battery and Oxygen Supply, and Ready for Testing.

products of combustion may readily escape by G O. Then the natural head of water, W, and the pulling up of the bottom valve, B V, by the valve-lifter handle, V L, permits the surrounding water to enter the combustion chamber, C C, through B O and flood the whole interior of C C. At the same time, the products of combustion in C C partly escape by B O when G O is closed, and the whole of the water which has entered C C may be forced out into C V by the application of oxygen from O T, so that the water in C V can be brought into intimate contact with everything that has been heated by the burning of C S.

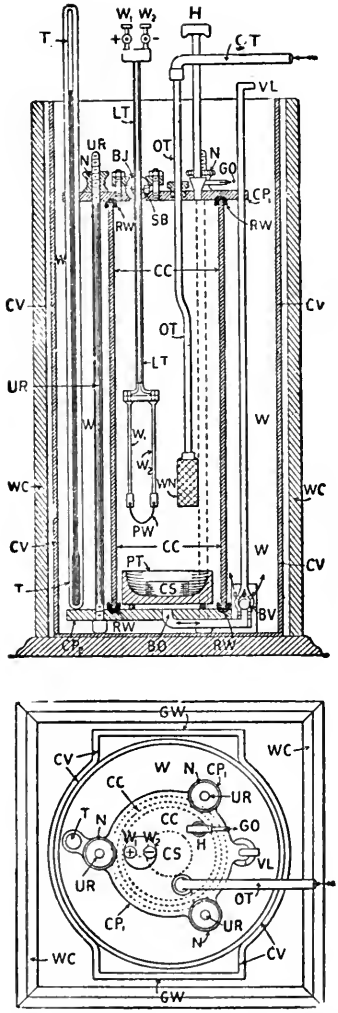

Index to Parts.

W C	for	Wooden casing or outside cover.
C V	,,	Calorimeter vessel.
G W	,,	Glass windows for C V.
C S	,,	Coal sample.
P T	,,	Porcelain tray.
C C	,,	Combustion chamber.
$CP_{1,2}$	,,	Cover plates for top and bottom of C C.
R W	,,	Rubber washers for C C.
U R	,,	Upright rods.
N	,,	Nuts for U R.
B J	,,	Ball joint.
S B	,,	Stuffing-box.
L T	,,	Leading-in wire tube.
W_1, W_2	,,	Wires to P W.
+, −	,,	Leads to battery.
P W	,,	Platinum wire igniter.
O T	,,	Oxygen tube.
W N	,,	Wire gauze nozzle.
B O	,,	Bottom outlet or inlet to chamber, C C.
B V	,,	Ball valve for bottom outlet and inlet.
V L	,,	Valve lifter for B V.
G O	,,	Gas outlet.
H	,,	Handle for G O.
T	,,	Thermometer.
W	,,	Water in C V covering the combustion chamber, C C.

Vertical Section and Plan, with Index to Parts, of the previously Illustrated Rosenhain-Thomson Coal Calorimeter.

The thermometer, T, is now read as previously described in explaining the Thomson instrument. This thermometer is graduated into degrees Centigrade and subdivisions, so that 0·01° C. may be correctly read. Another thermometer, graduated to 0·01° C., is also used for the purpose of taking the temperature of the atmosphere and of the oxygen supply in the oxygen wash-bottle, as seen to the extreme right of the first figure; whilst the ordinary water supply bottle and a 1,000 c.c. measure, for holding the necessary water is seen on the left of that figure. It will be observed from this figure, the vertical section and plan, and the next figure, that the containing vessel is surrounded with a loosely-fitting wooden case for the purpose of preventing currents of air carrying off heat by radiation from the polished brass box window-fitted containing vessel, C V.

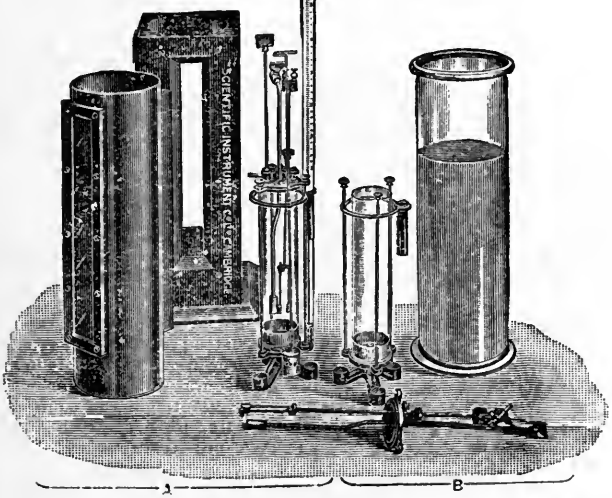

ROSENHAIN-THOMSON COAL CALORIMETER, showing Forms A and B. Made by the Cambridge Scientific Instrument Company.

This casing is dispensed with in the cheaper and simpler form, B, shown on the right hand of the above figure. Also, in this form, the products of combustion, the aperture or bottom outlet, B O, communicates directly with the water, W, without the intervention of a ball valve, B V, for the gas pressure in C C, can be made sufficient to keep out or let in the water, W, as required.

Accuracy of the Instrument.—Full instructions how to use these calorimeters are supplied by the makers with each instrument. They state, that the complete combustion of a small compressed cylinder of coal takes from 7 to 15 minutes, according to its weight, by aid of this instrument, whilst less than ½ per cent. of the sample escapes being thoroughly burned, and that no carbon monoxide need be formed when the supply of oxygen, &c., is properly regulated. It is worth noting here, however, that after

the maximum reading of the thermometer, T, has been observed (by taking the values at stated short intervals after the water has been finally expelled from the combustion chamber), the entire instrument is allowed to cool, with a slight current of oxygen passing through it for a period of time equal to half of that which has elapsed between the commencement of the combustion and the maximum reading of the thermometer. Then, the fall of temperature during this time is added, *as a radiation correction*, to the apparent rise of temperature observed between the initial and maximum readings of the thermometer.

Here, in this instrument, we see, that the thermometers used are graduated to the Cent. scale, and that the weight of the coal specimen is taken in grammes, whilst the times are observed in seconds. Hence, everything is noted in accordance with the truly scientific and now universal centimetre-gramme-second system of carrying out accurate physical or electrical experiments.

EXAMPLE V.—

Let W = 3,270 gms. of water (for the whole instrument, as before).

w = 1·425 gms. for weight of coal specimen.

t = 3·34° C. for apparent rise of W + ·08° C. for radiation correction.

Then, since the calorific value, C_V, must be in gramme degrees Cent., or French calories, we get, by the same reasoning and formula as before—

$$C_V = \frac{W\,t}{w} = \frac{3{,}270 \times 3{\cdot}42}{1{\cdot}425} = 7{,}850 \text{ C.G.S. calories.}$$

But, since a degree Cent. is equal to $\frac{9}{5}$ of a degree Fah., we have only to multiply 7,850 by 9 and divide by 5 in order to get the result, 14,130, in B.T.U.

Gas and Oil Calorimeters.—In view of the fact, that gas and crude mineral oils are now frequently burned instead of coal for generating steam in boilers, as well as for producing power in gas engines, it is important that engineers should be able to measure accurately their calorific values. The principle and the action of calorimeters adapted for this purpose will be readily understood from what has been stated in this lecture. The heat generated by the flame of the burning gas or oil is transmitted to a current of water flowing at a constant rate in a somewhat similar way to that of a surface steam condenser. Then, measurements are simultaneously taken of—

(1) The quantity of gas or oil burned in a certain time;

(2) The quantity of water passed through the calorimeter in the same time;

(3) The constant or mean difference of the temperature in degrees of the water on entering and leaving the apparatus during the experiment.

Junkers' Gas and Oil Calorimeter.—The general arrangement of the whole apparatus, as set up and ready for a gas test is shown by Fig. 1 with its index to parts. A vertical section and sectional plan through the calorimeter vessel is explained by Fig. 2 and its index to parts. Finally, Fig. 3 shows a special burner for testing the calorific value of oils, spirits and other liquids.

Testing Gases.—From the general view in Fig. 1 and sectional views in Fig. 2, it will be seen, that the gas to be tested is measured for quantity by a gas meter, G M, for temperature by a thermometer, T_1, and for pressure by a meter, P M, and gauge, P G, before it enters the burner, B, in the calorimeter vessel, C V. The heat produced from the flame, F, which rises

from the burner, strikes the inside of the combustion chamber, C C, and the heated gases, H G, turn round near the top of this chamber and enter the upper ends of a series of vertical tubes surrounded by water. These gases flow down the tubes and give up their heat to the water befor leaving by the spent gas outlet, G O.

The cold water is led by the water-supply pipe, W S, to an elevated cistern, from which it gravitates through the C W pipe to an adjustable tap, A T, where its temperature is taken by the thermometer, T_2. It then flows upwards and around the numerous heated gas tubes, H G, inside the calorimeter vessel, C V. The heated water, H W, is thus forced up through a series of divisional or disc plates, D P, in order to thoroughly mix it and enable the thermometer, T_3, to register the temperature which it has attained from the heated gases. The hot water overflow, H W O, then passes into a soil-pipe funnel until the difference of temperature, as found by T_2 at the inlet and at the outlet by T_3, becomes constant, when it is turned into a water measure, W M. The other and smaller water measurer, W M, is for the purpose of collecting any condensed vapour from the inside of the containing vessel, C V. For every cubic centimetre of water collected in this smaller vessel an allowance of 0·6 calorie* must be made and deducted from the gross value, as shown by the example.

Testing Oils.—The only difference between the arrangements for testing the calorific values of gases and oils, or other liquids, lies in the burner. For this purpose a special arrangement has been provided, as shown by Fig. 3. The liquid is contained in an oil reservoir, O R, which has a screwed top or nipple, *n*, connected to a force air-pump for the purpose of driving the liquid up to the burner, B. The whole of this special burner and its fittings can be suspended from one arm of a balance whilst the flame is playing up inside the combustion chamber, C C, of the calorimeter previously described. By taking off a weight from the scale pan side equal to the desired amount of oil to be burned, the balance will show when this quantity has been consumed by its pointer arriving at zero of its scale, then the experiment can be stopped and the calorific value of the consumed oil ascertained with the same accuracy, and in the same way as now to be described for gases.

EXAMPLE VI.—

Let C_V = Calorific value obtained from the burned gas or liquid.

,, W = Weight of water passed through the apparatus and heated.

,, t = Temperature difference of inflow and outflow water.

,, G = Gas or oil burned during the test.

Then, $C_V = \frac{W\,t}{G}$ calories or heat units per unit of gas or oil burned.

Suppose that the following results were obtained :—

Gas Meter.	Cold Water by T_2.	Hot Water by T_3.	Water Passed.
0·344 cub. ft.	8·77° C.	26·77° C.	2 litres.

Then, G = 0·344 cubic foot; $t = (T_3 - T_2) = (26{\cdot}77 - 8{\cdot}77) = 18°$ C.;
W = 2 kilogrammes.

*This figure represents the latent heat of the steam formed by the combustion; in the internal combustion engine this heat passes out with the exhaust gases.

Hence, $C_V = \frac{W t}{G} = \frac{2 \times 18}{\cdot 344} = 104 \cdot 65$ (large) calories per cb. ft. of gas burned.

Now, if it has been found, that 2 cubic feet of gas, when burned, caused 53 c.c. of water to become condensed and drained into the small water

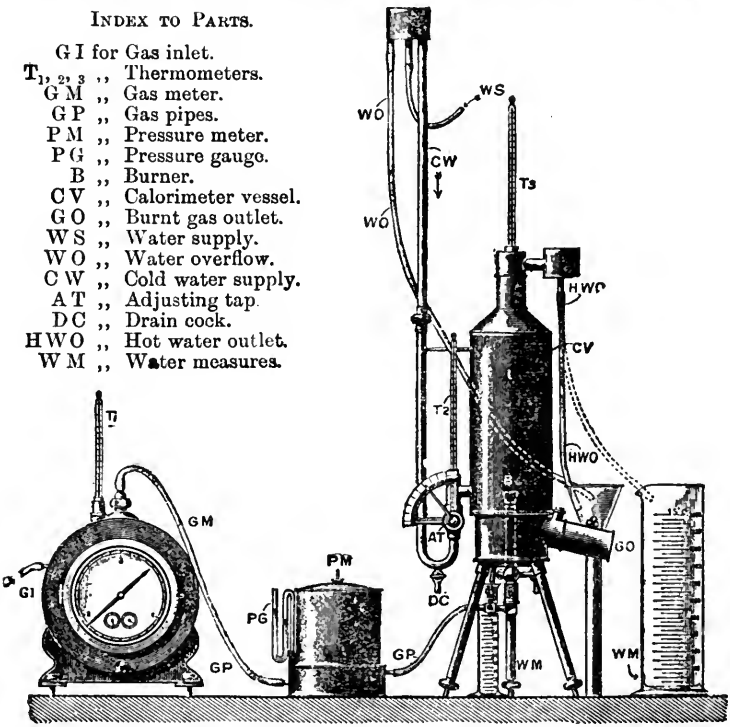

FIG. 1.—JUNKERS' GAS AND OIL CALORIMETER.
In Complete Working Order.
(By Hermann Kühne, Limited, London.)

measure, W M, its calorific value per cubic foot of gas consumed will be, as previously explained:—

$$\frac{0 \cdot 6 \times 53}{2} = 15 \cdot 9 \text{ calories.}$$

Hence, the net calorific value per cubic foot of the gas in the present instance will be—

$$(104 \cdot 65 - 15 \cdot 9) = 88 \cdot 75 \text{ (large) calories.}$$

And,
$$\frac{88 \cdot 75 \times 9}{5} = 160 \text{ B.T.U. (approximately).}$$

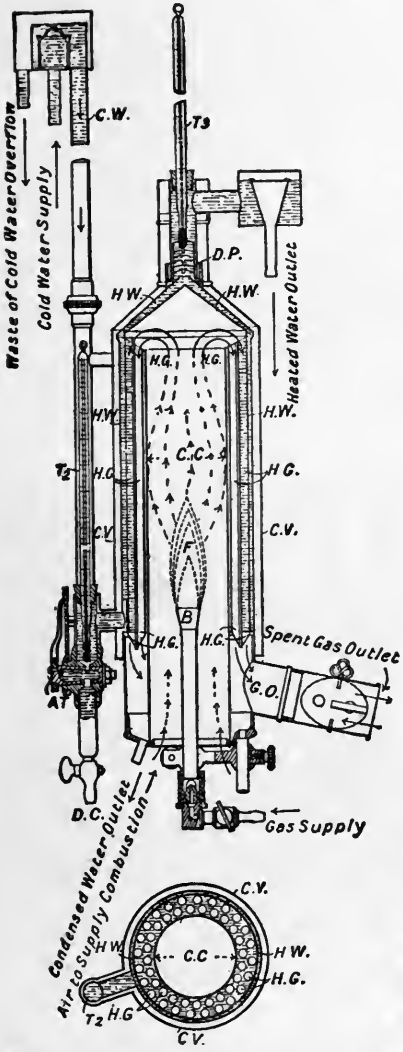

FIG. 2.—VERTICAL SECTION AND PLAN OF JUNKERS' CALORIMETER.

INDEX TO PARTS.

For Fig. 2.

C W for Cold water.
A T ,, Adjustable tap.
D C ,, Discharge cock.
T_2 ,, Inlet thermometer.
C V ,, Calorimeter vessel.
H W ,, Heated water.
D P ,, Disc plates.
T_3 ,, Outlet thermometer.
B ,, Burner.
F ,, Flame.
C C ,, Combustion chamber.
H G ,, Hot gases passing down through the vertical tubes.
G O ,, Gas outlet for spent gases.

For Fig. 3.

B for Burner.
O R ,, Oil reservoir.
n ,, Nipple.

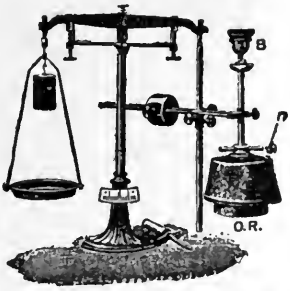

FIG. 3.—SPECIAL BURNER FOR TESTING OIL FUELS WITH JUNKERS' CALORIMETER.

Calorific Values of Coals and Gases from their Chemical Analysis.—If we obtain a correct analysis of any coal, gas, or oil and refer to a table of the heat units per lb. or per gm. for each element contained therein, we can calculate the approximate calorific value of the coal, gas, or oil, but this method of arriving at the result is now giving way to the more practical and direct calorimeter measurement just described.

EXAMPLE VII.—Taking the following formula, as used by Messrs. Brame and Cowan in their "Comparison of Different Types of Calorimeter," and applying the same to their analysis of a sample of coal, where—

Carbon (C) . . .	= 90·09 %	Hydrogen (H)	= 3·85 %
Sulphur (S) . . .	= ·77 ,,	Ash . .	= 1·68 ,,
Oxygen and nitrogen (O+N)	= 3·61 ,,		

We get the calculated calorific value, C_V, in large calories by the formula:—

$$C_V = \frac{1}{100}\left[8{,}140\,C + 34{,}500\left\{H - \frac{(O+N)-1}{8}\right\} + 2{,}220\,S\right].$$

C_V = 8,567 calories = 15,421 B.T.U.

This high value was only 0·7 per cent. lower than their best result by experiment with the Mahler Calorimetric Bomb, but it was 0·9 per cent. higher than their greatest with the William Thomson Calorimeter.

Specific Heats of Gases.—It is important, and in fact necessary to distinguish between the specific heat of a gas at constant pressure and its specific heat at constant volume.

The specific heat of a gas when kept at constant pressure is the quantity of heat required to raise unit mass thereof one degree in temperature. In this case, the gas is considered in the same way as that in which we defined the specific heats of liquids and solids. For example, the specific heat of perfectly dry pure air under this condition is 0·2377, or approximately ·238, at all temperatures and pressures.

The specific heat of a gas when kept at constant volume is the quantity of heat required to raise unit mass thereof one degree in temperature. Under this condition the specific heat of perfectly dry pure air is represented by the number 0·1688, or approximately 0·17.

The ratio of these two specific heats for dry air is $\frac{\cdot 238}{\cdot 17} = 1{\cdot}4$, and this ratio is practically the same for the other gases which cannot be readily condensed into liquids. It may also be considered as approximately true, in regard to both these ways of estimating the specific heats of gases *which cannot be readily liquefied*, that:—

(1) The specific heat of a definite gas is the same at all temperatures and pressures.

(2) The specific heats of different gases are inversely as their densities, when the latter are compared at the same temperature

and pressure. Or, the thermal capacities of equal volumes of different gases are equal at the same temperature and pressure.

Specific Heats of Steam.—As stated in the footnote to Table II., Lecture VII., on the "Properties of Dry Saturated Steam," the specific heat of superheated steam is usually taken at Regnault's estimate of 0·48. His experiments consisted in determining the total heat necessary to raise water from 32° F. or 0° C. to temperatures of about 120° C., and to 220° C. *under the constant pressure of the atmosphere*, then taking the differences of these two experiments as being the heat necessary to raise water from 120° C. to 220° C. This involves the assumption that steam of 20° C. (or 36° F.) above the boiling point is in the condition of steam gas. Later researches indicate that the specific heat of steam for a small amount of superheat is greater than for the higher superheats now adopted with steam engines.

The following values are given by Prof. Sir J. A. Ewing, F.R.S., in his text-book upon *Steam Engines and other Heat Engines* (Cambridge University Press) of the mean specific heat of superheated steam at constant pressure extending from the temperature of saturation t up to the temperature t', to which superheating is carried; the figures are obtained from Mollier's researches:—

Temperature of Superheat t' °C.	Temperature of Saturation t° C.				
	80.	120.	160.	180.	200.
100	·49	...	...	...	...
150	·49	·51	...	...	...
200	·49	·51	·54	·57	...
250	·48	·50	·53	·56	·59
300	·48	·50	·52	·54	·57
350	·48	·49	·51	·53	·56
400	·48	·49	·51	·52	·56
450	·48	·49	·51	·52	·54

LECTURE IV.—QUESTIONS.

1. What do you mean by the quantity of heat in a body, and how is it measured?

2. What is the unit of heat adopted in Great Britain? How many units of heat are imparted to a cubic foot of water (62·5 lbs.), on raising it from 60° to 212° F., also to 1 lb. of copper? *Ans.* 9,500, and 14·44.

3. Define and show the difference between the terms "capacity for heat" and "specific heat" of a substance. Suppose a substance was given to you to find its specific heat, how would you conduct the experiment? Give an arithmetical example.

4. If 1 lb. of platinum is plunged into 1 lb. of water at 50° F., and the resultant temperature of the water is 112° F., what was the original temperature of the platinum? *Ans.* 2,025·5° F.

5. If 2 lbs. of copper at 500° F. are plunged into 4 lbs. of water at 60° F., what will be the resulting temperature? *Ans.* 80° F.

6. Define "specific heat." Deduce a formula for determining the relation between the masses, specific heats, &c., when two substances are mixed together. A piece of platinum, weighing 1 lb., is suspended in the hot gases of a furnace whose temperature has to be ascertained. After being heated to the temperature of the furnace it is taken out and plunged into 2 lbs. of water at 49° F. The resulting temperature of the mixture is found to be 100° F. Determine the temperature of the furnace, having given specific heat of platinum = 0·034. *Ans.* 3,100° F.

7. Sketch and describe the principle and action of Thomson's coal calorimeter. Explain clearly, why the "water equivalent" of each item therein which is subjected to heat from the burnt specimen of coal must be accounted for if accurate results are to be obtained by this instrument. Show how these are arrived at and how the total "water equivalent" is computed.

8. The total "water equivalent" of a Thomson's coal calorimeter is 10 lbs., the weight of the coal specimen is 0·01 lb., and the maximum rise in temperature of the water, &c., is 10° F. What is the heat value of the specimen in B.T.U. per lb. of coal and in calories per kilogramme? Calculate how many lbs. of water every lb. of this coal would convert into steam at and from 212° F., if the combustion was perfect and if all the heat therefrom entered the water.

9. Sketch and describe concisely the construction and action of the Rosenhain-Thomson coal calorimeter. If the "water equivalent" in this case be 4 kilogrammes, weight of specimen 2 grammes, apparent rise in temperature of water 3·9° C., and the radiation correction 0·1° C.; what is the calorific value of the coal in C.G.S. calories and in B.T.U.? What weight of steam would this coal raise at and from 100° C.? *Ans.*, 14·9 lbs.; 14,400 B.T.U., or 8,000 C.G.S. calories.

10. Define the two ways of reckoning the specific heat of gases. Is the specific heat of a gas supposed to be the same at all temperatures and pressures? How does the specific heats of different gases vary with their densities? What do you know about the specific heats of wet, saturated, and superheated steam?

11. Sketch and describe Junkers' calorimeter, and explain how it is used for ascertaining the calorific values of gases, oils, or other combustibles.

12. Explain and give an example of how the calorific values of combustibles may be obtained from their chemical analysis.

13. How do we determine approximately the calorific value and the quantity of air required for the complete combustion of any combustible gas of which we know the chemical composition? What is your notion of the construction of a contrivance which would enable us to measure the calorific value? A coal contains 84 per cent. of carbon, 6 per cent. of hydrogen, 1 per cent. of oxygen. What is its calorific value? Take the calorific value of carbon as 14,500 and of hydrogen 4·28 times that of carbon. How much water at 60° F. will 1 lb. of this fuel convert into steam at 212° F.?

14. Given the following analyses of different samples of coal. Calculate, by aid of the formulæ in this lecture, their respective calorific values in calories and B.T.U.:—

Samples.	C.	H.	S.	Ash.	O + N.	Answers in Calories.
B, . in °/₀,	81·02	3·23	0·64	9·50	5·61	7,527
C, . in °/₀,	87·79	4·09	0·59	3·14	4·39	8,425
D, . in °/₀,	84·07	4·51	0·685	5·69	5·045	8,241
E, . in °/₀,	78·29	4·76	1·48	4·90	10·57	7,638

15. What are the ultimate constituents of a steam coal upon which the value of the fuel as a heat-producer depends? Describe the important chemical actions which take place during the combustion of coal, and obtain an expression for the *calorific value* of the fuel, and for the amount of air required theoretically and in practice for the complete combustion of a coal containing given proportions of carbon, hydrogen, and oxygen; hence determine how many lbs. of water at 62° F. could be theoretically evaporated into steam at 212° F. by the complete combustion of 1 lb. of a coal containing 84 per cent. of carbon, 5 per cent. of hydrogen, and 1 per cent. of oxygen, and what would be the minimum weight of atmospheric air that would be necessary to completely burn each lb. of such a coal?

16. A pound of fuel contains:—Carbon, 0·886 lb.; hydrogen, 0·041 lb.; and oxygen, 0·028 lb. What is its calorific value without deducting for the latent heat of the steam produced? If, in a *perfect* boiler the gaseous products weigh 12 lbs., their average specific heat being 0·238, and the boiler steam is at 341° F. while the boiler-room is at 60° F., what percentage of the whole heat is necessarily carried away? If the feed is at 60° F., how many lbs. of steam would be produced by a perfect boiler? If a common boiler at the same pressure produces 9 lbs. of steam per lb. of fuel, what is its efficiency?

17. In a boiler trial, a continuous collection is made of samples of the furnace gases as they leave the boiler, and a volumetric analysis of the samples collected gives the following figures:—CO_2 = 10·35 per cent.; O = 8·10 per cent.; N = 81·55 per cent. The coal used during the trial has 87·3 per cent. of carbon, 3·7 per cent. of hydrogen, 1·4 per cent. of oxygen, 2·3 per cent. of nitrogen, and the rest is ash. Find how many pounds of air have been admitted to the furnace per pound of coal burnt. Also find, given that the air temperature during the trial was 61° F., and the temperature of the escaping furnace gases 753° F., the loss in thermal units in the waste gases per pound of coal burnt. The specific heat of CO_2 = 0·217, of O = 0·218, and of N = 0·244.

LECTURE V.

CONTENTS.—Transfer or Diffusion of Heat — Radiation — Conduction — Convection — The Ebullition and Circulation of Water in Steam Boilers — Questions.

Transfer or Diffusion of Heat.—It was explained in the last lecture, that equality of temperature between two bodies exists, when there is no tendency to a transfer of heat from either to the other. We saw also that, when their temperatures differed in the slightest degree, there is a tendency to an equality of temperature, by a transfer of heat from the hotter to the colder, and that this tendency is greater, the greater the difference of temperature between the bodies.

Rankine states that the rate at which the transfer of heat takes place between two bodies, at unequal temperatures, depends—

"*First.* On the tendency to transfer heat, increasing as some function of the two temperatures and their difference.

"*Secondly.* On the areas of those parts of the surfaces of the bodies through which the transfer of heat takes place. In most of the cases which occur in practice, those areas are equal, and then the rate of transfer of heat is directly proportional to their common extent.

"*Thirdly.* On the nature of the material of each of the bodies, and the condition of their surfaces.

"*Fourthly.* On the nature and thickness of the intervening substances, if any. Increase of that thickness diminishes the rate of transfer of heat.

"The transfer of heat takes place by three processes, called respectively, *radiation*, *conduction*, and *convection*.

"Radiation of heat takes place between bodies at all distances apart, in the same manner and according to the same laws with the radiation of light."

Radiation.—To illustrate the radiation of heat from one body to another, take a common poker, heat it to redness in the fire, and hold one hand a few inches from the heated end, as shown in the figure.

The hand experiences the sensation called heat, owing to the transfer of the same in straight lines from the hot poker, as it were by radial vibrating rays of heat energy.

Another common, but interesting illustration, is that of making a convex lens of ice, by pressing a heated concave scale-pan of a balance on a block of ice, and holding this lens between the sun and your coat at the proper distance, so as to

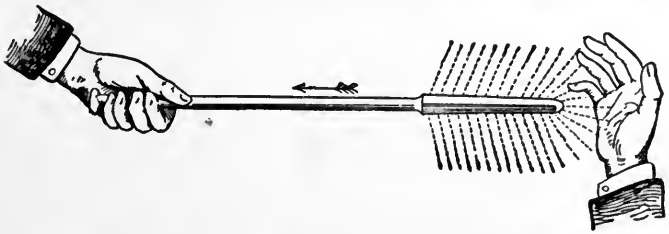

focus the heat rays on the same. The lens of ice as well as the air will be scarcely affected by the heat rays passing through them, while the coat will soon be burned.

An even still more interesting and striking experiment, due to Professor Tyndall, is that of focussing the heat rays from the sun or a strong electric arc light on the interior of a block of ice.

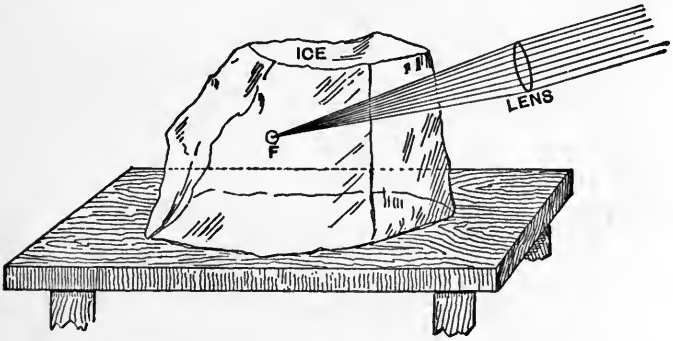

The heat rays pass through the mass of ice without apparently affecting it, except at the point where they meet; here the ice very soon becomes melted.

The phenomenon of radiation consists, therefore, in the transmission of energy from one body to another by propagation through the intervening medium, in such a way that the progress of the radiation may be traced, after it has left the first body and before it reaches the second, travelling with a certain velocity and leaving the medium behind it in the condition in which it

found it. It is only when the radiation is stopped that the effects of heat are observed.

Radiant heat is propagated with a speed practically the same as that of light; for example, after a total eclipse of the sun, the heat rays reappear simultaneously with those of light, travelling somewhere about 186,000 miles per second. In free space, or in air of uniform density, light moves in straight lines, so does radiant heat, whether from the sun or from a terrestrial source; in fact, radiant heat and light may be regarded as identical and inseparable. Speaking generally, the rate of radiation of heat by the hotter of a pair of bodies, and of its absorption by the colder, are increased by darkness and roughness of the surfaces of the bodies, and diminished by smoothness and polish. The best radiators of heat are likewise the best absorbers of heat, and the poorest reflectors. For example, it will be seen from the following table, that the radiating and absorbing power of soot is a maximum or 100, while its reflecting power is nil—a fact of considerable importance in connection with the generating of steam in boilers. Again, cylinder covers are highly polished; why?—to prevent radiation of heat therefrom.

COMPARATIVE RADIATING, OR ABSCRBENT, AND REFLECTING POWERS OF SUBSTANCES.

SUBSTANCE.	POWERS.	
	Radiating or Absorbing.	Reflecting.
Lampblack or soot,	100	0
Water,	100	0
Cast iron, polished,	25	75
Wrought ,,	23	77
Steel ,,	17	83
Brass, cast, dead polish,	11	89
,, ,, bright,	7	93
Copper, hammered or cast,	7	93
Silver, polished bright,	3	97

Conduction.—*Conduction is the transfer of heat through substances, or from one substance to another when in contact, due to difference of temperature.* It may be conveniently divided into *internal* and *external* conduction, according as the transfer of heat takes place, between the parts of one continuous body, or through the surface in contact of a pair of distinct bodies, although to a large extent external conduction or surface con-

ductivity is an action of the same kind as internal conduction, for the conduction takes place in the surrounding medium. For example, take the heated poker (figure on p. 61), the end held in the left hand becomes gradually heated by the transfer of heat, from molecule to molecule of iron, along the poker in the direction of the arrow, while the hand is heated by the transfer of heat through the surface in contact therewith.

A body which conducts heat quickly, is called a good conductor of heat; if it conducts heat slowly, it is called a bad conductor, or, if *very* slowly, a non-conductor of heat. For example, hold a copper rod in the hand, and place it in the fire in the same way as we did the iron poker, the sensation of heat is felt by the hand much sooner than in the case of the poker, whereas, if we do the same with a piece of wood, of the same length and cross-section as the poker, or the bar of copper, it will be entirely burnt away at the end placed in the fire, before any appreciable heat is conducted to the hand.

A common class experiment to illustrate the different conducting powers of bodies is that shown by the following figure, where small balls are attached by wax at regular intervals to two rods or bars, *e.g.*, copper and iron, and heat applied to their inner ends simultaneously, and equally, as shown.

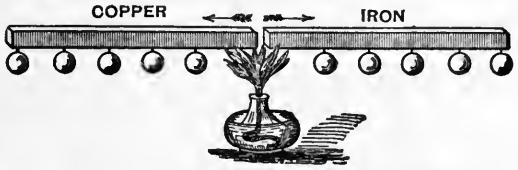

The balls attached to the copper bar fall off, by the melting of the wax, much sooner than those hanging from the iron one, thus proving conclusively that copper is a better conductor of heat than iron, although their capacities for heat are about the same.

Thermal conductivity must be measured (other things being equal) by the quantity of heat which passes; therefore the rate at which conduction (whether internal or external) goes on, is proportional to the cross area of the section, or the surface through which it takes place. It may be expressed numerically in so many units of heat per square foot, per minute, or per hour. For example, engineers speak of the evaporating power of a boiler, as so many pounds of water raised into steam at a certain pressure per square foot of grate surface per hour, or plus per square foot of the additional heating surfaces, although in reality it depends on many things besides mere conduction of the plates.

To compare plates of different materials, we must take them

all of the same thickness and superficial area, and subject them all on the one side to a certain temperature, and on the other side to the same number of degrees more or less.

DEFINITION.—*The thermal conductivity of a body at any temperature is the number of units of heat which pass, per unit of time, per unit of surface, through an infinite plate (or layer) of the substance, of unit thickness, when its sides are kept at temperatures respectively half a degree above and half a degree below that temperature* (TAIT).

Although the above definition is perfect, in as far as it lays down theoretically a thoroughly systematic way in which the relative conducting powers of different substances may be compared, it is found practically impossible to realise experimentally such simple conditions.

The methods chiefly employed for measuring thermal conductivity depend ultimately upon observations of the temperature of the body at different parts of its mass.

The temperature effects of a given quantity of heat are inversely as the capacity for heat of the body; hence, what is directly deduced from such experiments is not the thermal conductivity as just defined, but *its ratio* to the capacity for heat of the body.* Thus, these experiments require in addition, the

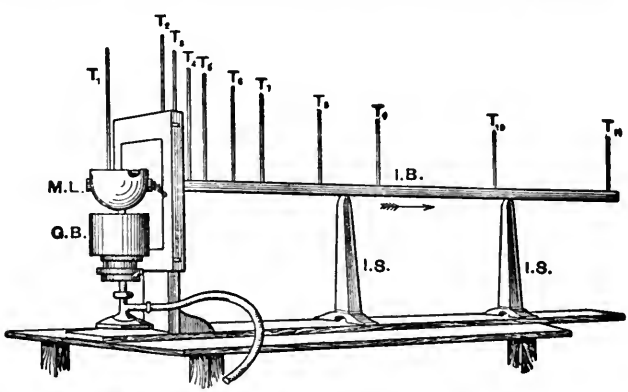

FORBES' EXPERIMENT ON CONDUCTIVITY.

I B for Iron bar.
I S ,, Insulating supports.
$T_1, T_2 \ldots T_{11}$,, Thermometers.
M L for Melted lead.
G B ,, Gas burner (Argand).

* This is termed *Thermometric Conductivity* by Maxwell and DIFFUSIVITY by Sir William Thomson (see tables at end of Conduction).

determination of the specific gravity and of the specific heat of the body.

Principal Forbes' well-known experiments on the conductivity of iron * are the most trustworthy, and will illustrate what has been written and show the student how experiments might be carried out on other metals.

A long bar, I B (in Forbes' experiment, 8 feet by 1¼ inch square), fixed on non-conducting or insulating supports, I S, has one end inserted into a pot of melted lead, M L, or solder, kept at a constant temperature by the Argand gas burner, G B. The bar has small holes drilled in it, into which the bulbs of the various accurate thermometers, T_2, T_3 . . . T_{11}, are introduced, a little mercury being poured into the holes so as to form good contact between the bulbs of the thermometers and the bar. The bar is first brought to a uniform temperature, by being left in the laboratory all night without the application of heat. The end is then inserted into the bath of melted lead, and the rise in temperature noted by each of the thermometers, those nearest to the bath beginning to rise first, and then the next, and so on to the last, until finally each of them arrives at a fixed temperature, with a gradual fall between each, graphically represented in the figure by the length of the thermometer stems. The quantity of heat which now passes per minute across any particular transverse section of the bar is constant, and is equal to the product of the cross area, the conductivity, and the fall of temperature at that section. Hence, the quantity of heat passing is expressed by a definite multiple of the unknown conductivity. But that heat does not raise the temperature of the bar beyond the section in question, for the temperature has become stationary, owing to just as much heat passing into the air by cooling as flows into the bar from the leaden bath. To find this rate of cooling, a short bar of the same cross-section and material as the long one, with a thermometer stuck into it, is highly heated and allowed to cool, the rate of cooling being noted by taking frequent readings *at exactly equal intervals of time*—say every half-minute. The heat lost per minute per unit of length, at each temperature, within the range employed, is thus obtained, and a calculation made of what the long bar lost at any particular cross-section.

Principal Forbes found by his experiments that the conductivity of iron for heat, like its conductivity for electricity, diminishes with a rise of temperature. This similar effect on the two forms of energy, heat and electricity, does not appear

Trans. Roy. Soc. Edin., 1861-2.

however to be common to the other metals experimented upon by Professor Tait; but, as he remarks, "the whole subject, as far as experimental details are concerned, is still in a very crude state."

The value of k in the following expression gives the *thermal conductivity* of a substance at a given temperature in accordance with the definition:—

$$Q = k A \frac{t_2 - t_1}{x} . T,$$

Where Q denotes the Quantity of heat that flows in time, T.
A ,, ,, Cross area, or the area of each of the opposite faces of the plate.
x ,, ,, Thickness of the substance.
t_1, t_2 ,, ,, Temperatures on each side of the plate.

From which we see, as has been already remarked, that the quantity of heat which flows by conduction through any substance is directly proportional to the area, and to the difference of temperature between its faces, and inversely proportional to the thickness.

In most experiments the value of the *thermal conductivity* constant, k, is given in accordance with the centimetre, gramme, second, or C.G.S. system of units, and not in the more familiar English foot-pound-minute system. The engineering student will find the following table, taken from the best source—viz., Sir William Thomson's article on "Heat" in the *Encyclopædia Britannica*, 1880 (where the values for the constants, k, c, and $\frac{k}{c}$, are all in C.G.S. units), of considerable interest. From these results, we see that the thermal conductivity of copper is 500 times that of water, and 20,000 times that of air, while iron is 80 times that of water, and 3,500 times that of air. These are important facts to bear in memory, for it shows us that the transmission of heat from the radiant burning coal or charcoal in our furnaces or domestic fire-places on one side of a boiler-plate, kettle,* or frying-pan, to hot water, steam, or melted fat on

*The late Mr. Foulis, M.Inst.C.E., General Manager of The Glasgow Corporation Gas Works, has found, in connection with his numerous experiments on water-heating apparatus for houses and railway carriages worked by gas flames, that thin cast-iron transmits heat more rapidly and effectually to water than copper or other smooth metals of the same thickness and area. This is probably due to the numerous small rough points on the surface of the cast-iron next to the water taking up the heat vibrations and communicating them to the liquid more thoroughly than the much smoother surface of copper or wrought-iron—*A. J.*

DIFFUSIVITIES (THERMAL, MATERIAL, AND ELECTRIC).

Substance.	Thermal Conductivity. k.	Thermal Capacity of Unit Bulk. c.	Diffusivity.* k/c.	Authority.
Copper,	0·91	0·845	1·077	...
Iron,	0·16	0·875	0·185	...
Air, Oxygen, Nitrogen, Carbonic oxide,	0·0000049	0·000307	0·16	Clausius and Maxwell, according to kinetic theory.
Carbonic acid,	0·000038	0·000428	0·088 8	
Hydrogen,	0·00034	0·000307	1·12	
Underground strata (rough average),	0·005	0·5	0·01	Forbes and W. Thomson.
Wood,	0·0005	0·39	0·001 3	...
Water,	0·002	1·00	0·002 2	J.T. Bottomley.

* What Clerk Maxwell calls Thermometric Conductivity.

the other side, goes on as if the thermal conductivity of the metal were infinite, or, in other words, the resistance to the transmission of heat through the metal is as nothing compared to the resistance which it meets with from the liquid or gas.

It is important that the engineer should appreciate the relative conducting powers of the different metals that he has to deal with.

It is very difficult to obtain reliable figures for the conductivity of different metals. The following table of relative conductivities given in Preston's *Theory of Heat* is the most reliable within our knowledge :—

Metal.	Relative Conductivity.
Silver,	100
Copper,	73·6
Brass,	23·6
Tin,	14·5
Iron,	11·9
Steel,	11·6
Lead,	8·5
Platinum,	6·3

As it is frequently of importance to engineers to know the relative conducting powers of bad conductors for purposes of lagging boilers, steam pipes, and cylinders, we give the following table of values obtained by J. J. Coleman, F.C.S. (the inventor of the well-known Bell-Coleman freezing machine).

In considering the question of preventing loss of heat or heat insulation, as it may be called, we have to remember that conduction is only one of the factors; convection and radiation also come into play, and loss of heat will be less with a polished surface than with a dull black one. The vacuum flask is one of the best heat-insulating devices in every-day use; it is equally good for keeping hot things hot or cold things cold.

RELATIVE CONDUCTING POWERS FOR HEAT.

Silicate cotton,	100	Charcoal,	140
Hair felt,	117	Sawdust,	163
Cotton wool,	122	Gas-works breeze,	230
Sheep's wool,	136	Wood and air space,*	280
Infusorial earth,	136		

Convection.—When the application of heat to a fluid causes it to expand or to contract, it is thereby rendered rarer or denser than the neighbouring parts of the fluid; and if the fluid is at the same time acted on by gravity, it tends to form an upward or downward current of the heated fluid; this is accompanied with a current from the more remote parts of the fluid in the opposite direction. This action is rendered very apparent by the following simple experiment:—

Take a flask partially filled with water, mix a few grains of bran with it, and apply a lighted spirit-lamp to the bottom of the flask. In a few minutes the water will be seen to circulate in the direction shown by the arrows in figure. The water nearest the flame is rendered lighter, and, therefore, rises upwards, while the denser water falls under the action of gravity, to be in turn heated and raised. The actual transfer of heat throughout the water takes place by conduction, but the diffusion is much assisted by the motion of the fluid, or convection currents, as they are termed.

* Wood and air space, although the best heat conductor in the list, is often used as a non-conductor lagging for boilers, etc., on account of its cheapness and ease of application, but it is not a safe lagging for marine boilers, for it has been known to take fire. Charcoal, if only 1½ inches thick, is not suitable for boiler lagging, for in one case known to the writer a temperature of about 180° F. was observed on the surface when coated to that depth. This lagging was removed, but it might have done very well if put on thicker, say 3 inches. Silicate cotton, although the best non-conductor or heat insulator in the list, is dear and friable. A number of proprietary preparations are on the market which combine the advantage of non-conducting qualities with consistency, which enables them to be laid on while the boiler is cold.

The following experiment is also very instructive :—Take a test tube filled with water (centre Fig. A), and apply a spirit lamp near the surface of the water. You may hold it there for ten minutes or more, and the water at the bottom of the tube is scarcely perceptibly warmer than at first. Now apply the lamp to the bottom of the tube (right hand Fig. B) ; in a few minutes the water begins to boil. Why this difference ? The convection currents set up have assisted the naturally bad conducting power of the water by bringing, in turn, every portion of it into close proximity with the source of heat (see Fig., p. 70).

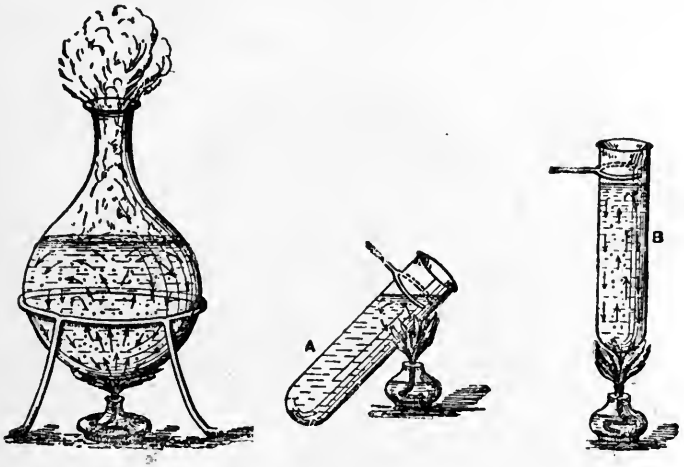

It is for the reasons just mentioned, that the fire-place in a boiler is placed near the bottom instead of near the surface of the water, and it is of great moment not only to give a free and easy path for convection currents in boilers, but to stimulate them by such appliances as hydro-kineters. The better the circulation of the water in a boiler, the more rapidly will it be heated and the steam generated. In many boilers (such as those used on board steamers) the internal construction is so mixed up with tubes and stays, that the water has great difficulty in passing from out-of-the-way corners to the more highly heated parts over the flues ; and, if circulation is not assisted, the convection currents "short circuit," as it were (to use an electrical term), and thus leave the more remote portions in comparative chill. For a similar purpose, large boiler flues are provided with " baffling plates," to compel the hot gases

to take a circuitous course, in order that eddies may be formed and for the further object of promoting a better mixture of air with the inflammable gases.

The art of promoting a good draught in a furnace, or of properly ventilating a building or a ship, depends upon promoting and guiding the convection currents in the proper direction, avoiding sharp bends and contractions. The draught produced by a chimney depends directly upon the difference of the weights of the columns of air (of the cross section and height of chimney), which descend to feed the fires and rise through the chimney. Hence the draught depends upon the height and the cross-sectional area of chimney, or difference of temperature between the gases at the bottom and top of chimney.

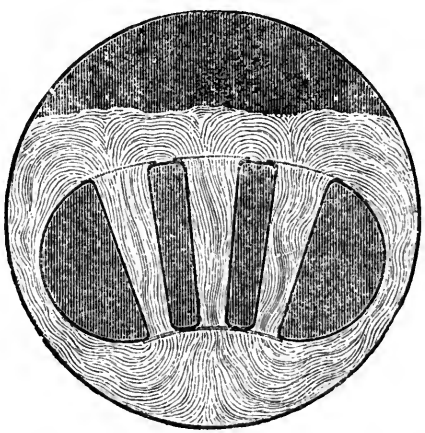

CROSS SECTION THROUGH THE COMBINED OVAL FLUE OF THE GALLOWAY BOILER, SHOWING THE SUPPOSED CIRCULATION OF THE WATER DUE TO THE CONICAL TUBES.

The Ebullition and Circulation of Water in Water-Tube Steam Boilers.—The following eleven figures will give students a very good idea of the circulation of water through the tubes and evolution of a water-tube boiler. These figures are taken from a lecture delivered at Cornell University by Mr. George H. Babcock, with the kind permission of Messrs. Babcock & Wilcox.

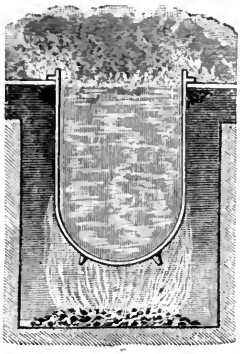

INTERFERENCE OF CONVECTION CURRENTS.

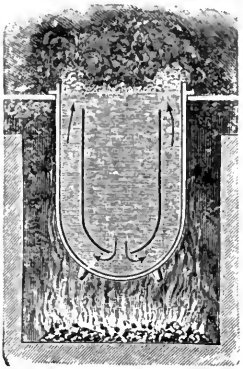

PREVENTING INTERFERENCE BY DIVIDING CONVECTION CURRENTS.

GEYSER-LIKE ACTION.

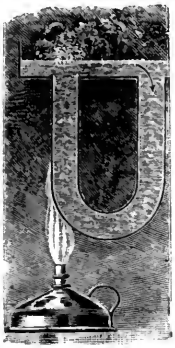

CIRCULATION THROUGH A U-TUBE.

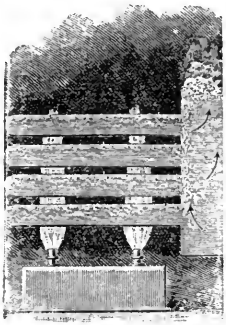

IMPERFECT CIRCULATION WITH HORIZONTAL TUBES.

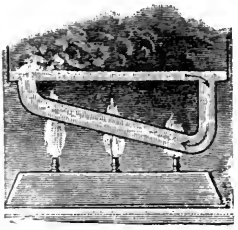

INCLINED HEATING SURFACE CAUSES BETTER CIRCULATION.

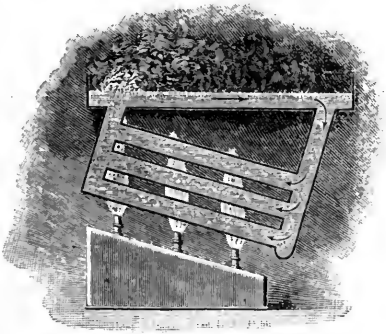

INCREASED AND INCLINED HEATING SURFACE CAUSES STILL BETTER CIRCULATION

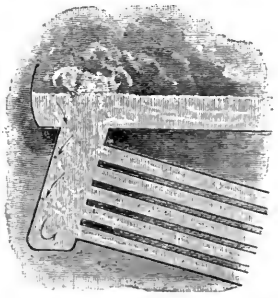

DISADVANTAGES OF LARGE UPTAKE BY PERMITTING CONTRA-DOWN CURRENTS.

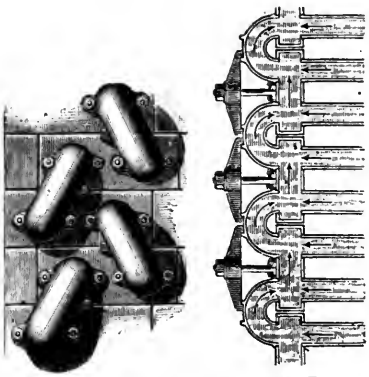

DISADVANTAGES OF PLACING RETURN BENDS OPPOSITE THE ENDS OF THE TUBES.

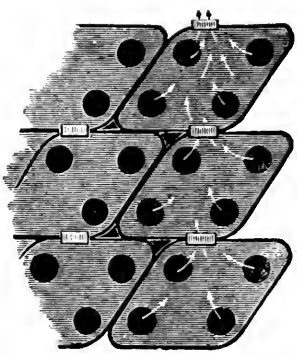

DISADVANTAGES OF DIFFERENT CROSS SECTIONS IN THE FLOW OF CURRENTS.

LECTURE V.—QUESTIONS.

1. What is meant by capacity for heat or thermal capacity? The specific heat of mercury being ·033, how much, at the temperature of 240° F., will be sufficient to raise 12 lbs. of water from 50° to 58° F.? *Ans.* 15·98.

2. What will be the relative capacities for heat of the same volumes of air, carbonic oxide, steam, and hydrogen at the same pressures if their densities are as 14·4, 14, 7, and 1 respectively? (Prove answer by arithmetic.) *Ans.* All equal, because the capacity for heat of equal volumes is inversely as the density.

3. What do you mean by conduction and convection, as applied to heat?

4. Describe an experiment by which you would show that water is an extremely bad conductor of heat. For what reason should heat be applied from below when it is required to heat a large mass of water rapidly?

5. What is the object of facilitating the circulation of water in boilers? State and illustrate two ways by which the circulation of the water in a boiler increases the efficiency or ratio of heat in steam to heat applied to heating surfaces

6. What is the effect on the circulation of the water by having horizontal tubes stopped at one end, or return bends opposite the tubes in the water-tube boiler? Also, why is it necessary to guard against having the uptake too large at the upper end of the tubes in a water-tube boiler?

7. Trace the evolution of the water-tube boiler by neatly-drawn sketches and concise descriptions of each.

8. When draught is produced by a chimney, upon what things does the magnitude of the draught depend? In order to approximate to the temperature of the gases at the base of a chimney, a mass of iron weighing 8 lbs. was placed in them, and after remaining a considerable time was removed and submerged in 100 lbs. of water at 50° F., when it was found that the temperature of the water was raised to 55° F. Find the temperature of the gases, having given that the specific heat of iron is one-ninth. *Ans.* 617·5° F.

LECTURE VI.

CONTENTS.—Nature of Heat—Heat is not a Substance—Rumford, Davy, and Joule's Experiments—Conversion of Work into Heat—First Law of Thermo-dynamics—Joule's Mechanical Equivalent of Heat—Latest Equivalents for the B.T.U.—Questions.

UNTIL the end of last century, two rival theories had been entertained regarding the nature of heat. One, that heat consisted of a subtle elastic fluid, termed caloric, penetrating through the pores or interstices of matter, like water in a sponge; the other, that it was an internal commotion among the particles or molecules of matter.

The former of these theories, or hypotheses, that heat is matter, called the "materialistic doctrine of heat," taught by Professor Black of Glasgow University and others, was most conclusively overthrown by the celebrated experiments of Count Rumford and Davy. It is very remarkable, however, that fifty years elapsed before scientific men generally became converted to the conclusions to be drawn from them. It was not until Joule, during the period extending from 1840 to 1849, had supplied several fresh proofs that heat is not a material substance, but one form of energy, which may be applied to, or taken from bodies in various ways, and that the amount of energy, in whatever form applied or removed, may be estimated in mechanical units of work or foot-pounds, that what is now known as the *Kinetic theory of heat*, became generally accepted, and the science of thermo-dynamics placed on a firm basis.

Count Rumford's experiments on the production of heat by friction, were carried out in the following manner, and communicated to the Royal Society in 1798:—

In casting guns it was usual to leave a projecting cylindrical "head" of metal at the muzzle, so as to insure sound metal in the gun. The guns were cast in a vertical position with the muzzle end upwards, very much in the same way as large water or gas pipes are now made. The effect of adding the "head" to the casting, being to add pressure to the fluid metal in the lower parts, thus expelling air and gases towards the surface, and into the "head," which was cut off before boring out the gun.

Rumford obtained a casting for a six-pounder brass gun from the military arsenal at Munich, and surrounded the "head,"

H, by a wooden trough, W T, containing about 18 lbs. of water, W, at 60° Fah. The machinery which rotated the gun, G, was driven by two powerful horses. A blunt boring tool, B T, which was made of steel, 3·5 inches diameter, was forced

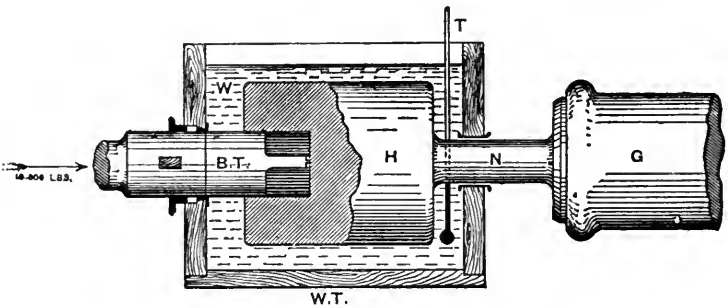

COUNT RUMFORD'S EXPERIMENT.

G	for Gun.	W T	for Wooden trough.
N	,, Neck.	W	,, Water.
H	,, Head.	T	,, Thermometer.
B T	,, Boring tool.		

against the head, H. This boring tool was held firmly in a rest, and pressed forward by means of a screw with an estimated pressure of 10,000 lbs. The result of this experiment was that, the heat generated by the friction between the blunt boring tool and the metal of the head, was partly conducted through the neck connecting the head with the gun, and partly absorbed by the water in the trough, so that the temperature of the water rose at the end of an hour to 107° F., in an hour and a-half to 142° F., in two hours to 178° F., and, finally, at the end of two and a-half hours the water boiled. Count Rumford said—"It would be difficult to describe the surprise and astonishment expressed in the countenances of the by-standers on seeing so large a quantity of water heated, and actually made to boil without any fire!" He adds—"By meditating on the results of these experiments, we are naturally brought to that great question which has so often been the subject of speculation, namely—What is heat? Is there any such thing as an igneous fluid? Is there anything that, with propriety, can be called caloric?" And, further—"It is hardly necessary to add that anything which an insulated body or system of bodies can continue to furnish without limitation, cannot possibly be a material substance; and

it appears to me to be extremely difficult, if not impossible, to form any distinct idea of anything capable of being excited, and communicated in the manner heat was excited, and communicated in these experiments except it be motion."

Davy's experiment on the melting of ice by friction, announced by him in 1799, in his first published work, entitled—*An Essay on Heat, Light, and Combinations of Light*, was regarded at the time as a complete refutation of the materialistic doctrine of heat.

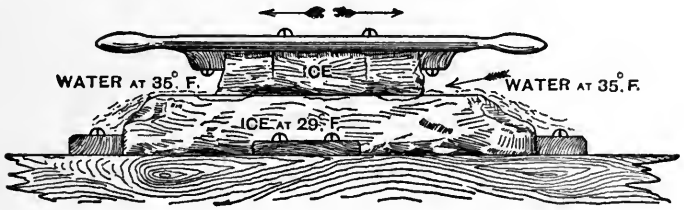

SIR HUMPHREY DAVY'S EXPERIMENT.

In an atmosphere at a temperature of 29° F., he rubbed together two small slabs of ice with the result (as shown in the fig.) that the ice was melted at the surfaces of contact, producing water at a temperature of 35° F. Now, as we saw in Lecture IV., a mass of water contains an absolute quantity of heat greater than an equal mass of ice, and it is, therefore, impossible to account for the presence of the increased temperature on the assumption that heat is a material substance. Davy said—"The immediate cause of the phenomenon of heat is motion, and the laws of its communication are precisely the same as the communication of the laws of motion."

Maxwell, in his *Theory of Heat*, p. 306, says—"The molecules of all bodies are in a state of continual agitation. The hotter the body is, the more violently are its molecules agitated."

Joule's experiments, carried out between 1840 and 1849, recalled the attention of scientists to Rumford and Davy's doctrine regarding the nature of heat, and gave us the means of estimating with exactness the quantity of work required to generate a certain quantity of heat.

We shall describe only two of Dr. Joule's famous experiments.

Dr. Joule filled a copper tube with a fusible metal or alloy, F M (such as that used by the printers in making stereotype castings of types), which fuses at a low temperature, and

revolved the tube rapidly between the poles, N, S, of a strong electro-magnet, E M. The result of this was that the temperature of the alloy rose in a few minutes to the melting point, and the alloy could be poured from the copper tube. What agency was at work to fuse the metal? There was no friction between the revolving tube and any other part of the mechanism, for the tube rotated quite clear of the poles in the space between them; neither was it due to any friction from the spindle carrying the copper tube, for, if the battery or dynamo was disconnected (and thus no magnetism evoked) the tube might be revolved at the same speed as before, without any observable rise in temperature in the alloy. One circumstance was, however, made very apparent, viz., that it required much less effort to revolve the tube in the latter case than in the former, and herein lies the key to the whole secret. A certain proportion of the power devoted to revolving the tube between the magnetised poles is expended in creating electric currents in the copper tube, and in the metal contained therein. These currents agitate and vibrate the molecules of the metal so very rapidly amongst themselves, that heat results from the forces at work overcoming the inter-molecular friction.

To prove that electric currents are so generated, we have only to cite the case of the now well-known Dynamo, where the copper

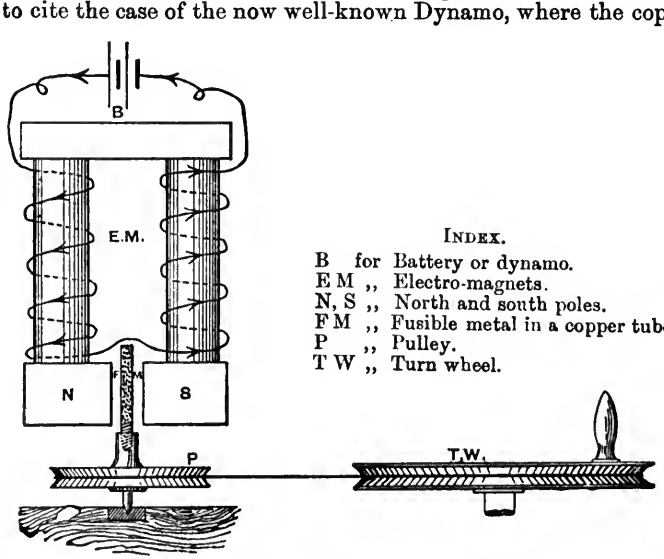

JOULE'S MAGNETO-ELECTRIC EXPERIMENT.

wires forming the armature, when revolved between the powerful magnetic poles, have strong currents excited in them; and to show that such currents are capable of producing heat, we have only to pass them through a thin metal wire or an incandescent lamp, with the result that the wire is heated to a white heat, or even fused, and the carbon filament made to glow with a brilliant incandescence.

We have in this experiment of Dr. Joule's a beautiful example of the double conversion of energy, viz., (1) mechanical energy into electrical energy, and (2) electrical energy into heat energy.

Joule's favourite experiment was the conversion of work into heat by the stirring of water. He arranged his apparatus in a manner similar to that shown in the figure.

A known weight, W, was allowed to fall through a known height, and in doing so to revolve vanes or paddles, R V, inside

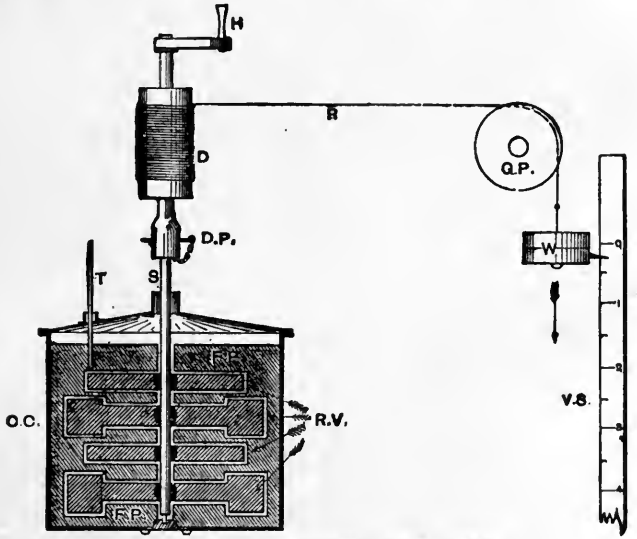

JOULE'S WATER-STIRRING EXPERIMENT.

V S	for Vertical scale in feet.	C C	for Copper cylinder.
W	,, Weight.	T	,, Thermometer.
R	,, Rope or twine.	R V	,, Revolving vanes or paddles (8 sets).
G P	,, Guide pulley.	F P	,, Fixed plates (4 sets).
D	,, Drum.	D P	,, Disconnecting pin.
H	,, Handle.		
S	,, Spindle.		

a copper cylinder, C C, containing a known weight of water; thus churning the water against the fixed plates or stationary screens, F P. The effect of this churning was to raise the temperature of the water, by imparting to it a certain quantity of heat, depending on the product of the weight into the space through which it fell, or the foot-pounds of work expended. We need not enter into the many details of Dr. Joule s carefully conducted experiments, whereby he eliminated from his results the effect of friction in the guide pulley, G P, as well as the effects of radiation and conduction of heat to or from the apparatus during the time of the experiment, etc. It will suffice to give his final result and an example.

The British Association in 1870 requested Joule to reinvestigate the subject for the purpose of giving greater accuracy to the determinations by his fluid friction method, with the final result of proving that 772·43 *foot-pounds* (*at the latitude of Manchester*) *are equal to the quantity of heat required to warm from* 60° *to* 61° *Fah. a pound of water weighed in vacuum.* This is called "Joule's Equivalent," and is denoted by the letter J; later experiments give the value 778, so that 1 *British thermal unit* = 778 *ft.-lbs.* Reduced to the centimetre gramme second or (C.G.S.) system, it is equivalent to about 42 million "ergs" or units of work for one gramme of water raised in temperature from 0° to 1° C.

For instance, suppose that, with Joule's apparatus we had a weight of 77·8 lbs., and allowed it to fall through a height of 10 feet, and in doing so, the mechanical work (778 ft.-lbs.) would be converted into heat by churning 1 lb. of water at 60° F., we should find (if all extraneous losses were avoided) that the water had risen in temperature to 61° F., when the weight passed the 10th foot; or, if we take 1 lb. of water at 60° F., and raise its temperature 1° F., by any method whatever, the quantity of heat imparted to it (viz., 1 thermal unit), if converted into mechanical energy by a perfect heat engine, would perform 778 ft.-lbs. of work, or raise 778 lbs. 1 foot.

First Law of Thermo-dynamics.—*Heat and work are mutually convertible, and Joule s equivalent is the rate of exchange.*

The importance of this mutual relation between *heat* and *work* cannot be too strongly impressed on the student at the very outset of his studying steam and the steam engine. In this lecture it has been shown that the expenditure of so many *units of work* produces under the circumstances noted an exact and unvarying equivalent of so many *units of heat;* and we shall see in future lectures how the expenditure of so many *units of heat* produces an equivalent in *units of work.*

A familiar illustration of the foregoing principle of the mutual convertibility of heat and work is that of the Locomotive Engine. In the furnace we have the production of heat by the combustion of coal. A proportion of this heat is imparted to the water in the boiler thus raising steam. The steam on being admitted to the cylinders parts with a portion of its heat in the act of doing the work of propelling the pistons, and thus moving the train. Again, when the train is nearing a station the steam is shut off, and the brakes applied. Then the stored work is converted into heat, which may be observed by sparks issuing at the brakes and by feeling the increased temperature of the brakes, wheels, and rails.

EXAMPLE I.—Suppose a locomotive burns 6 lbs. of coal per horse-power hour, and that every pound of coal burned in the furnace gives up to the water in the boiler 10,000 British units of heat, we have—

$$6 \text{ lbs.} \times 10{,}000\,u = 60{,}000 \text{ units of heat per H.P. hour.}$$

But $$1 \text{ H.P.} = 33{,}000 \text{ ft.-lbs. per minute, or}$$
$$= 33{,}000 \times 60 \text{ ft.} = 1{,}980{,}000 \text{ ft.-lbs. per hour,}$$

and $$778 \text{ ft.-lbs.} = 1 \text{ unit of heat.}$$

$$\therefore \quad \frac{1{,}980{,}000}{778} = 2{,}550 \text{ units of heat converted into work every hour.}$$

Consequently— $$60{,}000\,u : 2{,}550\,u :: 100 : x = 4{\cdot}25,$$

Or the locomotive only converts 4·25 per cent. of the total heat generated in the furnace into its equivalent of work in the cylinder.

EXAMPLE II.—Suppose that the energy of the train when the brakes are put on is equal to 16,500,000 ft.-lbs.

Then, $16{,}500{,}000 \div 778 = 21{,}200$ units of heat, or an amount of heat is generated at the brakes, wheels, and rails, etc., which would raise 212 lbs. of water 100° F.

Note.—We shall see later that, although a certain amount of heat is equivalent to a given amount of work, we cannot in a heat engine convert all the heat into work; that is why the highest possible theoretical efficiency of a heat engine is less than 50 per cent.

This question is dealt with fully in Vol. II.

LECTURE VI.—QUESTIONS.

1. Give free-hand sketches with index of parts, and a description in *your own* words of Rumford's, Davy's, and Joule's experiments.

2. State in your own words what you consider heat to be, and give Joule's mechanical equivalent for one British thermal unit.

3. How has the work done in raising the temperature of a pound of water through one degree been ascertained? A pound of coal gives out during combustion, 12,000 units of heat; how much work in foot-pounds could be done per pound of coal burned, if there were no waste? *Ans.* 9,264,000 ft.-lbs.

4. It is estimated that every pound of average steaming coal burned in the furnace of a boiler gives out 13,000 units of heat. It is found that a good compound engine and boiler requires 2 lbs. of coal per hour per indicated horse-power. What is the efficiency of the combined boiler and engine? *Ans.* 9·86 per cent.

5. Give another illustration of the first law of thermo-dynamics than that in the lecture, and work out an arithmetical example, and thus show that the transformation from mechanical work into heat is much more complete and efficient than from heat into work.

6. Define a unit of heat. A steam engine indicates 25 H.P., how many units of heat does it convert into useful work per minute? *Ans.* 1,068·65.

7. The following data are obtained during a gas engine trial:—I.H.P. = 42·6. Gas used per hour = 815 cubic feet. Cooling water used per hour = 320 gallons. Inlet temperature of jacket water = 61·5° F. Outlet temperature of jacket water = 125·7° F. Calorific value of 1 cubic foot of gas = 635 B.T.U. Make out as far as you can a heat account for this engine.

8. A man, working 8 hours a day for 300 days in the year, does work at the rate of one-tenth of a horse-power. One lb. of coal, having a calorific value of 15,000 thermal units, is burnt in a boiler having an efficiency of 70 per cent., which supplies steam to an engine having an efficiency of 15 per cent. Find how many years the man will have to work in order to give out as much useful work as 1 ton of coal used in the above plant. *Ans.* 5 years 9 months.

9. An oil engine of 2½ horse-power drives a motor car at a speed of 15 miles an hour. If the efficiency of the engine is 10 per cent., and the calorific value of the oil 20,000 thermal units, how much oil is consumed in a run of 100 miles? *Ans.* 2·25 gallons.

LECTURE VI.—A.M.INST.C.E. QUESTIONS.

1. Explain what is meant by the "mechanical equivalent" of heat. Describe briefly any one method which has been adopted to determine its value and state the result obtained. The consumption of coal in an engine is 1½ lbs. per I.H.P. per hour, and each pound of coal may be taken as supplying 11,000 thermal units; find what fraction of the heat-supply is usefully employed. *Ans.* ·155.

2. State the first law of thermodynamics, and give some account of any experiment with which you are acquainted by means of which its truth has been established. The consumption of coal in an engine is 2 lbs. per I.H.P. per hour, and each pound of coal may be taken as supplying 10,000 thermal units. Find what fraction of the heat is usefully employed. *Ans.* ·127.

3. Describe how the mechanical equivalent of heat may be experimentally determined. If all the heat in 1 lb. of carbon could be turned into useful work, find the number of pounds of carbon that would be required per H.P.-hour. *Ans.* ·176.

LECTURE VII.

CONTENTS.—Sensible and Latent Heats of Water and Steam—Temperature and Pressure of Steam—Regnault's Experiments—Tables I. and II. on Properties of Steam—Explanations of Sensible and Latent Heats, &c. —Mercurial Pressure and Vacuum Gauges—Bourdon's Pressure and Vacuum Gauges—Schäffer's Pressure Gauge and Thalpotasimeter—Questions.

Sensible and Latent Heats of Water and Steam.—Hitherto we have dealt with heat when imparted to or abstracted from bodies as indicated by a rise or fall of temperature in the body. It has been customary to call this condition *sensible heat;* but there are exceptional cases in which temperature does not vary in a mass of matter when heat is communicated to it, from, or taken from it, to, external matter. For instance, when the body is ice at the melting point, heat communicated to it does not raise its temperature above 32° F., or, if the body be water at the boiling point in the open air, heat slowly communicated to it, in however great a quantity, does not raise its temperature above 212° F., at the normal pressure of the atmosphere. This heat is termed *latent heat.*

A short account of Professor Black's well-known experiments carried out about 1762, will serve to illustrate the difference between what is termed the "sensible" and the "latent" heat of a substance.

BLACK'S EXPERIMENT ON LATENT HEAT OF WATER.

Black procured two glass flasks, in one of which he placed 5 ozs. of ice at 32° F.,* and in the other 5 ozs. of water at the same

* The ice was beginning to melt, and his estimate of the temperature at the surface was 33° F.

temperature. He suspended them within a short distance of each other in a room which remained at a uniform temperature of about 47° F. He observed that in *one* half-hour the water increased in temperature by 7° F., but that it took *twenty* half-hours for the whole of the ice in the other flask just to become melted, and he reasoned thus—that from the time required the amount of heat which had entered the ice must have been *twenty* times as much as that which entered the water. He, therefore, computed that the *latent heat* of water must be 7 × 20 (half-hours) = 140.

Another experiment of Black's was that of placing a lump of ice in an equal weight of water at 176° F., with the result that when the whole of the ice had melted, the temperature was no greater than that of water just ready to freeze. Therefore, assuming the final temperature of the mixture to have been 33° F., we have 176 − 33 = 143, as the amount of heat required to melt the ice, or *the latent heat of water*.

In this estimate he was very near the truth; for, even at the present day the mean results of some of the best experimenters appears to be, that 143 British thermal units of heat are absorbed, or become latent, in the conversion of 1 lb. of ice into water at the same temperature; and, consequently 143 B.T.U., are given out or let free in the conversion of 1 lb. of water at 32° F., into ice at the same temperature.*

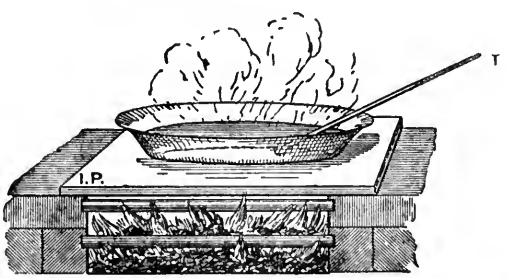

BLACK'S EXPERIMENT ON THE LATENT HEAT OF STEAM.

Black's third experiment consisted in placing a flat tin dish on a hot plate over a fire; into this plate he put a small quantity of water at 50° F., and observed that after 4 minutes the water

* The latent heat of water by the Centigrade scale is 79·4 for $\frac{143 \times 5}{9} =$ 79·4, say 79 units of heat required to convert 1 lb. of ice at 0° C., into 1 lb. of water at the same temperature.

began to boil, and in 20 minutes more it had all evaporated. Now, since the water increased by $(212° - 50°) = 162°$ in 4 minutes, he reasoned that it must have been receiving heat at the same rate throughout the experiment, or that, in 20 minutes it had absorbed five times as much as in the first 4 minutes without any apparent rise in temperature as indicated by the thermometer, or, $5 \times 162 = 810$—Black's estimate of the latent heat of steam.

In this last estimate Black was incorrect, as might be expected, from the rough nature of his experiment. It has since been found that the *latent heat of steam* at atmospheric pressure is 966·6. In other words, it requires 966·6 British thermal units of heat to convert 1 lb. of water at 212° F., into steam at the same temperature, or 1 lb. of steam at 212° F., gives out 966·6 B.T.U., in being condensed into water at the same temperature.*

The following definition of sensible and latent heat will now be quite clear:—

"Heat given to a substance, and warming it, is said to be *sensible* in the substance. Heat given to a substance, and *not* warming it, is said to become *latent*" (*Sir Wm. Thomson*).

Latent heat is the quantity of heat which must be communicated to unit mass of† a body in a given state, in order to convert it into another state without changing its temperature (*Maxwell*).

Temperature and Pressure of Steam.—When water is confined in a closed vessel, and heated, the pressure of the vapour contained therein continually increases. The precise temperature which corresponds to any particular pressure, has been made the subject of very careful inquiry by Regnault and others. Before quoting Regnault's results, we shall illustrate these phenomena by means of a simple apparatus, termed Marcet's boiler.

On applying heat from the Bunsen burner, B B, steam is generated from the water, W, and the temperature as it rises is noted by the thermometer, T. Simultaneously the column of mercury rises in the tube, and the height from the free surface of the mercury may be read off (roughly) on the graduated scale, G S. When the temperature has arrived at 233° F., the mercury will be observed to have risen about 15 inches, corresponding to

* The Latent Heat of Steam by the Centigrade scale, is, therefore, $\frac{966·6 \times 5}{9} = 537$; or, 537 times the quantity of heat absorbed in raising 1 lb. of water by 1° C.

† I have added the words (unit mass of) to Maxwell's definition, because it appears deficient without them. When we speak of 143 as the latent heat of water, and 966 as the latent heat of steam, it is understood that 143 and 966 units of heat are required respectively for every 1 lb. (or unit of mass) to change the state from solid to liquid, and from liquid to gaseous.—*A. J.*

a pressure of 7·4 lbs. per sq. in. above atmosphere, or 22 lbs. per sq. in. absolute (*i.e.*, from zero pressure, or what would correspond to a perfect vacuum); and when the temperature arrives at 250° the mercury will have risen to about 30 ins., corresponding to 14·7 lbs. per sq. in. (1 atmosphere), or 29·4 lbs. absolute.

If our glass tube had been longer, and the supply of mercury in the bottom of the boiler sufficient, we might have gone on applying heat and registering still higher pressures with their corresponding temperatures, but the limited experiment has been sufficient to show roughly, that a rise in temperature cannot take place without a corresponding rise in pressure. Mercurial gauges, such as that in the Marcet's boiler, were much used to register the pressure of steam in steam boilers, before the introduction of the Bourdon gauge. (See our Elementary Manual, Lecture XI.)

INDEX.

B B for Bunsen burner.
M B ,, Marcet's boiler.
M ,, Mercury.
W ,, Water.
S S ,, Steam space.
T ,, Thermometer in S S.
G T ,, Glass tube, about 35 in. long.
G S ,, Graduated scale.
C ,, Cock.

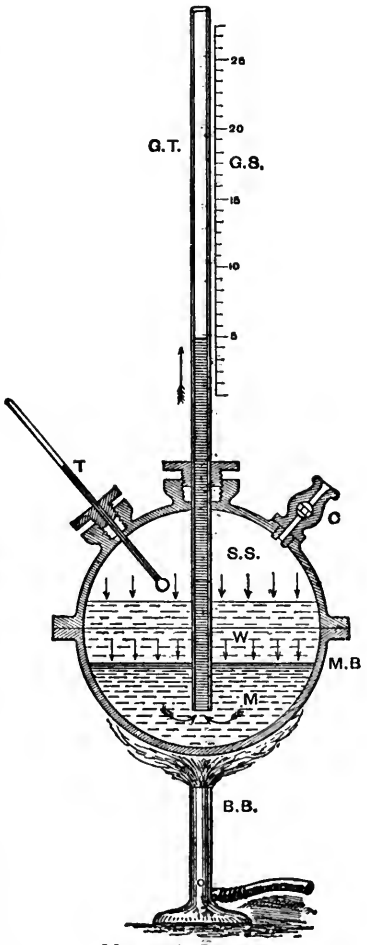

MARCET'S BOILER.

Regnault's Experiments.—Our knowledge of the properties of steam is chiefly derived from experiments made by Regnault at the Paris observatory for the French Government in 1847. They

the Paris observatory for the French Government in 1847. They were conducted with the greatest care, and involved immense labour. It is not necessary here to enter into any minute detail of the apparatus he used, but, generally speaking, it consisted of a boiler containing, when half full, about 33 gallons of water, a condenser of suitable dimensions to condense the steam as fast as it was formed, and an air chamber three times the size of the boiler provided with force pumps, by means of which any desired pressure could be produced at pleasure. Pressures were measured by means of a column of mercury open to the atmosphere—an arrangement admitting of greater accuracy than any other method, but involving the manipulation of a column of mercury some 50 feet in height, when registering the very high pressure to which he went, viz., over 400 lbs. on the square inch. The air chamber and condenser enabled any desired pressure to be maintained for any length of time. For his more accurate measurements of temperature he used an air thermometer.

Numerous formulæ have been devised for connecting algebraically the relation subsisting between the temperature and the pressure of *saturated steam.* They are, however, all only approximate, and are very complicated; in practice it is best not to attempt to work by formula, but to use the tables given on pp. 86-89.

As a matter of interest we give Rankine's formula, which agrees very closely with Regnault's experimental results; it should be remembered that this formula was not found by reasoning, but was chosen so as to fit the results of the experiments.

The formula gives the absolute pressure p in lbs. per sq. in., and is of the form:

$$\log p = A - \frac{B}{\tau} - \frac{C}{\tau^2},$$

where A, B, and C are constants, and τ, the absolute temperature of the boiling point $= t + 460$ (see Lecture XIII.).

The inverse formula for finding τ, when you know p, is

$$\tau = 1 \div \left\{ \sqrt{\left(\frac{A - \log p}{C} + \frac{B^2}{4\,C^2} \right)} - \frac{B}{2\,C} \right\}.$$

Where

A	Log. B	Log. C	$\frac{B}{2C}$	$\frac{B^2}{4C^2}$
6·1007	3·43642	5·59873	0·003441	0·00001184

Students should plot out a curve from the following table, representing graphically the relation between pressure and temperature. To do so, set off a scale of temperatures on a horizontal line, and on a vertical line starting from the same point plot the corresponding pressures *to the same scale.* Draw vertical lines from each of the former points, and horizontal lines from each of the latter. Connecting the points of intersection, we have a curve, which shows at a glance how the pressures increase more rapidly than the temperatures. See next page.

TABLE I.—PROPERTIES OF SATURATED STEAM FROM 32° TO 212° F.

Temperature.	Pressure.		Temperature.	Pressure.	
	Inches of Mercury.	Lbs. per Square Inch, Absolute.		Inches of Mercury.	Lbs. per Square Inch, Absolute.
Fahrenheit	Inches.	Lbs.	Fahrenheit	Inches.	Lbs.
32°	·181	·089	120°	3·430	1·685
35	·204	·100	125	3·933	1·932
40	·248	·122	130	4·509	2·215
45	·299	·147	135	5·174	2·542
50	·362	·178	140	5·860	2·879
55	·426	·214	145	6·662	3·273
60	·517	·254	150	7·548	3·708
65	·619	·304	155	8·535	4·193
70	·733	·360	160	9·630	4·731
75	·869	·427	165	10·843	5·327
80	1·024	·503	170	12·183	5·985
85	1·205	·592	175	13·654	6·708
90	1·410	·693	180	15·291	7·511
95	1·647	·809	185	17·044	8·375
100	1·917	·942	190	19·001	9·335
105	2·229	1·095	195	21·139	10·385
110	2·579	1·267	200	23·461	11·526
115	2·976	1·462	205	25·994	12·770
			210	28·753	14·126
			212	29·922	14·700

CURVE OF PRESSURES & TEMPERATURES
(From accompanying table)

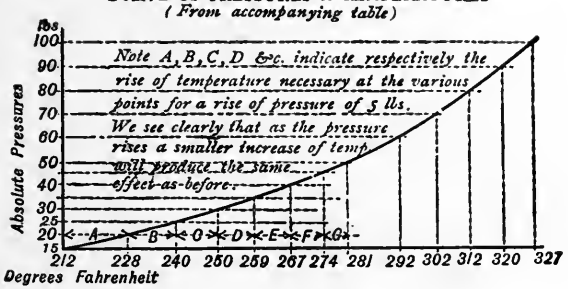

CURVE OF VOLUMES & PRESSURES
(From accompanying table)

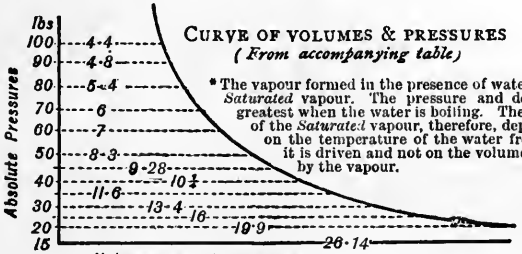

* The vapour formed in the presence of water is called *Saturated* vapour. The pressure and density are greatest when the water is boiling. The pressure of the *Saturated* vapour, therefore, depends only on the temperature of the water from which it is driven and not on the volume occupied by the vapour.

REMARKS ON TABLE II.

* *Saturated Steam* is steam in contact with the water from which it is generated. Its physical condition is such, that it is ready on the smallest increase of pressure, or decrease of temperature, to yield some portion as liquid. For a given pressure there is one temperature and one density.

Absolute Pressures are pressures reckoned from a perfect vacuum as zero. Ordinary steam pressure, as measured by steam gauges, is converted into absolute pressure by adding 15 lbs. *N.B.*—In all questions relative to the expansion of steam (Boyle's law, &c.) absolute pressures are to be used.

Temperature.—The second column gives the temperature at which water boils under the given pressure, and the temperature of the steam produced. It also gives (nearly) the units of heat required to raise 1 lb. of water from 32° to boiling point under this pressure *when* 32 *is subtracted.*

Example.—1 lb. water at 120° raised to boiling point under 50 lbs. pressure. The units of heat required = 281 − 120 = 161 units.

Total Heat, or sum of Sensible and Latent Heat.—This was believed by Watt to be a constant quantity, but elaborate and careful experiments by Regnault have shown that it increases along with the temperature When it is preferred to calculate by formula instead of using the table, we may take

$$H = 1{,}082 + \cdot 305\, t.$$

Latent Heat gets less at higher temperatures and pressures.

Relative Volume is the volume of steam generated under a given pressure compared with the volume of the water from which it is produced.

TABLE II.—Properties of Dry Saturated Steam.

Pressure in Lbs. per Sq. In. above an Abs. Vacuum.	Temperature in Degrees Fahrenheit.	Total Heat in Heat Units from Water at 32°.	Heat in Liquid from 32° in Units.	Heat of Vaporisation, or Latent Heat in Heat Units.	Density or Weight of Cubic Foot in Lbs.	Volume of 1 Lb. in Cubic Feet.	Special Factor of Equivalent Evaporation at and from 212° F.	Heat Equivalent of the External Work done during Evaporation in B.T. Units.	Pressure in Lbs. per Sq. In. above an Abs. Vacuum.
p	$t°$	H	S	L	w	V_S	E	H_E*	p
1	101·99	1113·1	70·0	1043·0	0·00299	334·5	0·9661	61·90	1
2	126·27	1120·5	94·4	1026·1	0·00576	173·6	0·9738	64·23	2
3	141·62	1125·1	109·8	1015·3	0·00844	118·5	0·9786	66·56	3
4	153·09	1128·6	121·4	1007·2	0·01107	90·33	0·9822	66·86	4
5	162·34	1131·5	130·7	1000·8	0·01366	73·21	0·9852	67·74	5
6	170·14	1133·8	138·6	995·2	0·01622	61·65	0·9876	68·44	6
7	176·90	1135·9	145·4	990·5	0·01874	53·39	0·9897	69·11	7
8	182·92	1137·7	151·5	986·2	0·02125	47·06	0·9916	69·66	8
9	188·33	1139·4	156·9	982·5	0·02374	42·12	0·9934	70·15	9
10	193·25	1140·9	161·9	979·0	0·02621	38·15	0·9949	70·57	10
†14·7	212·00	1146·0	180·0	966·0	0·03800	26·36	1·0000	72·00	†14·7
15	213·03	1146·9	181·8	965·1	0·03826	26·14	1·0003	72·51	15
20	227·95	1151·5	196·9	954·6	0·05023	19·91	1·0051	73·67	20
25	240·04	1155·1	209·1	946·0	0·06199	16·13	1·0099	74·57	25
30	250·27	1158·3	219·4	938·9	0·07360	13·59	1·0129	75·41	30
35	259·19	1161·0	228·4	932·6	0·08508	11·75	1·0157	75·90	35
40	267·13	1163·4	236·4	927·0	0·09644	10·37	1·0182	76·70	40
45	274·29	1165·6	243·6	922·0	0·1077	9·285	1·0205	77·20	45
50	280·85	1167·6	250·2	917·4	0·1188	8·418	1·0225	77·76	50
55	286·89	1169·4	256·3	913·1	0·1299	7·698	1·0245	78·21	55
60	292·51	1171·2	261·9	909·3	0·1409	7·097	1·0263	78·65	60
65	297·77	1172·7	267·2	905·5	0·1519	6·583	1·0280	79·02	65
70	302·71	1174·3	272·2	902·1	0 1628	6·143	1·0295	79·39	70
75	307·38	1175·7	276·9	898·8	0·1736	5·760	1·0309	79·75	75
80	311·80	1177·0	281·4	895·6	0·1843	5·426	1·0323	80·12	80
85	316·02	1178·3	285·8	892·5	0·1951	5·126	1·0337	80·39	85

p	t°	H	S	L	w	V_S	E	H_E*	p
90	320·04	1179·6	290·0	889·6	0·2058	4·859	1·0350	80·67	90
95	323·89	1180·7	294·0	886·7	0·2165	4·619	1·0362	80·95	95
100	327·58	1181·9	297·9	884·0	0·2271	4·403	1·0374	81·17	100
105	331·13	1182·9	301·6	881·3	0·2378	4·205	1·0385	81·40	105
110	334·56	1184·0	305·2	878·8	0·2484	4·026	1·0396	81·64	110
115	337·86	1185·0	308·7	876·3	0·2589	3·862	1·0406	81·87	115
120	341·05	1186·0	312·0	874·0	0·2695	3·711	1·0416	82·08	120
125	344·13	1186·9	315·2	871·7	0·2800	3·571	1·0426	82·24	125
130	347·12	1187·8	318·4	869·4	0·2904	3·444	1·0435	82·47	130
140	352 85	1189·5	324·4	865·1	0·3113	3·212	1·0453	82·81	140
150	358·26	1191·2	330·0	861·2	0·3321	3·011	1·0470	83·16	150
160	363·40	1192·8	335·4	857·4	0·3530	2·833	1·0486	83·43	160
170	368·29	1194·3	340·5	853·8	0·3737	2·676	1·0502	83·70	170
180	372·97	1195·7	345·4	850·3	0·3945	2·535	1·0517	84·00	180
190	377·44	1197·1	350·1	847·0	0·4153	2·408	1·0531	84·14	190
200	381·73	1198·4	354·6	843·8	0·4359	2·294	1·0545	84·31	200
225	391·79	1201·4	365·1	836·3	0·4876	2·051	1·0576	84·76	225
250	400·99	1204·2	374·7	829·5	0·5393	1·854	1·0605	85·06	250
275	409·50	1206·8	383·6	823·2	0·5913	1·691	1·0632	85·25	275
300	417·42	1209·3	391·9	817·4	0·644	1·553	1·0657	85·35	300
325	424·82	1211·5	399·6	811·9	0·696	1·437	1·0680	85·49	325
350	431·90	1213·7	406·9	806·8	0·748	1·337	1·0703	85·59	350
375	438·40	1215·7	414·2	801·5	0·800	1·250	1·0724	85·65	375
400	445·15	1217·7	421·4	796·3	0·853	1·172	1·0745	85·61	400
500	466·57	1224·2	444·3	779·9	1·065	0·939	1·0812	85·43	500

* $H_E = P V_E / J$, where P = pressure of steam per square foot, J = Joule's equivalent (778 for 1 B.T.U.), and V_E = the extended volume of steam at pressure, p. Or, $V_E = (V_S - V_w)$ = (the vol. of 1 lb. of steam – the vol. of 1 lb. of water) at the pressures, p, in this Table, as explained in Lecture XI., where the vol. of 1 lb. of water = ·016 cubic foot.

† The figures for this 14·7 lbs. line are the nearest round numbers for easy calculation.

Note.—The specific heat of dry saturated steam at constant pressure, or the heat in B.T.U. required to raise 1 lb. of steam through 1° Fah., is equal to ·48. It is usually taken as being constant at all pressures and temperatures.

Explanation of Sensible and Latent Heats by the Kinetic Theory of Heat.—According to the kinetic theory, heat is a rapid vibratory motion of the ultimate particles of matter, and temperature is the outward manifestation of this motion. An increase or a decrease in the temperature of a body means an increase or a decrease of molecular kinetic energy. Hence, by "sensible" heat is meant that heat which is effective in changing the molecular kinetic energy of the body. The sensible heat given to 1 lb. of water between the temperatures 32° F. and 212° F., is 180 B. T. U., and the whole of this heat is employed in giving a more rapid vibratory motion to the molecules of the water.* The amount of work done in increasing the kinetic energy of the molecules of the water during this change of temperature may be mentally pictured in this way. The sensible heat is equivalent to $180 \times 778 = 140{,}000$ ft.-lbs. of mechanical work, and corresponds to the work done in raising a weight of very nearly 63 tons through a vertical height of 1 foot; or, it is equivalent to the work done in projecting a 5 lb. shot from a gun with a velocity of 1,340 ft. per second! The whole of this work, be it remembered, has been done within the mass of 1 lb. of water between the freezing and boiling points. If, then, by any contrivance we convert the whole of the heat given out during the cooling of 1 lb. of water from its boiling to its freezing point, we should be able to do mechanical work to the extent of 140,000 ft.-lbs.

We have shown, that during the conversion of a solid into a liquid, or a liquid into a gas, an amount of heat disappears without in any way affecting a thermometer placed in the mixture; until, the change of state of the whole mass has been completed. Thus, in converting 1 lb. of ice at 32° F. into water, 143 B. T. U. disappear before a change of temperature takes place. In the same way, 966·6 B. T. U. disappear during the conversion of 1 lb. of water at 212° F. into steam at the same temperature. The question may then be asked, what becomes of this heat? Evidently no part of it is employed in increasing the kinetic energy of the molecules of the body, otherwise this would be indicated by an increase of temperature. The older physicists, believing that heat was a substance—a highly elastic, imponderable and subtle fluid, called *caloric*—accounted for the above phenomenon by saying that this "caloric" became *latent* or hidden in some out-of-the-way holes or pores of the body. But we now know that heat is not a substance, and we cannot conceive of any such

* We shall see in Lecture XI. that rather less than 180 B. T. U. are employed in increasing of molecular kinetic energy; but the difference is so small that we may safely neglect it.

cavities or pores in matter wherein this "caloric" could possibly conceal itself in the manner suggested. Further, this disappearance of heat never occurs except when there is a change of state of the body. To clearly understand what actually takes place we require to give a brief explanation of the fundamental differences of the three states of matter as presented to our senses. According to the theory of the *molecular constitution of matter*, the distinctive character of a solid is the fixedness of the molecules relatively to each other. The molecules have a rapid tremulous motion about their mean positions, but are otherwise so firmly bound to their neighbours that work has to be done against the molecular attractions before they can be given greater freedom of movement or separated from each other. Hence, considerable effort is required to separate one portion of a solid from the remainder of the mass. Whenever the molecular attractions are sufficiently overcome, that the molecules glide freely over each other and move about throughout the whole mass, we have all the characteristics of a liquid. The greater the mobility of the molecules the more perfect is the liquid. Hence, the difference between a solid and a liquid is the ease with which the parts of the latter can be separated from each other, and the readiness with which the whole assumes the form of the containing vessel. With gases, on the other hand, the mobility of the molecules is very much greater than in the case of liquids. Here the molecular forces are repulsive, and these cause the molecules to separate from each other as far as the sides of the containing vessel will permit. Thus, a portion of gas, however small, when allowed to enter a vessel, however large, soon diffuses itself equally throughout the whole vessel, and this is true whether there are other gases or not in the vessel along with it.

We are now in a position to understand what becomes of the so-called *latent* heat. In converting a solid into a liquid, or a liquid into a gas, work has to be done in effecting certain molecular actions, as in overcoming the molecular attractions characteristic of solid substances, or bringing into play those molecular repulsions characteristic of the gaseous state. Hence, during those transient states of matter, the so-called latent heat disappears as heat, but reappears as the result of molecular mechanical work.

As before, we may give a mental picture of the vast amount of work done within the mass of 1 lb. of water during those physical changes.

In converting 1 lb. of ice at 32° F. into water at the same temperature, 143 B. T. U. (or, $143 \times 778 = 111{,}300$ ft.-lbs. of work) have been expended against the molecular attractions.

This corresponds to the work done in raising a weight of about 49½ tons through a vertical height of 1 foot; or the work done in projecting a 4 lb. shot from a gun with a velocity of about 1,330 feet per second!

In converting 1 lb. of water at 212° F. into steam at the same temperature, 966·6 B.T.U. (or, 966·6 × 778 = 752,000 ft.-lbs. of work) are expended in bringing about this physical change. This corresponds to the work done in raising a weight of more than 335 tons through a vertical height of 1 foot; or the work done in projecting an 18 lb. shot from a gun with a velocity of more than 1,600 feet per second!

Conversely, when 1 lb. of steam at atmospheric pressure (212° F.) is condensed into water at the same temperature, the work done by the colliding or "clashing" of the molecules corresponds to 752,000 ft.-lbs. or 966·6 B.T.U.*

If, then, an engine could convert the whole of the heat given out during the reduction of steam at 212° F. into water at the same temperature, mechanical work to the extent of 752,000 ft.-lbs. would be done per lb. of steam condensed. We shall afterwards see that only a very small fraction of this work can be made use of in practice.

* We shall see in Lecture XI. that the whole of the 966·6 B.T.U. are not employed in molecular work; for about 73 B.T.U. go to perform work *external* to the substance.

Pressure Gauges. — Instruments for indicating the intensity of the pressure of a fluid contained in a closed vessel, are called "pressure gauges," or "vacuum gauges," according as they register how much the pressure is above or below that of the atmosphere.

The Mercurial Pressure Gauge, as seen by the first figure, consists of a bent, U, glass tube, containing mercury, from, O, round the bend of the tube to, O. One end is connected directly to the closed vessel, or say to a steam boiler, while the other end is connected to a cup, to prevent the mercury being lost when the pressure rises higher than the range of the tube. This cup is open to the air, and consequently the pressure of the atmosphere acts on that side of the mercurial column. A vertical scale is fixed immediately behind the vertical limb connected to the boiler or closed vessel, and it is graduated in any convenient manner—say, for lbs. per square inch of pressure. As the pressure increases, the mercury in this limb is depressed, and rises correspondingly in the other limb. When the pressure in the closed vessel equals that of the atmosphere, both ends of the mercury should stand at 0. The pressure as shown by the right hand scale is 39 lbs., and by the left one as fully 2¾ atmospheres. Nothing could be simpler or more accurate than this arrangement, for, as we saw in the case of the Marcet's boiler, a vertical column of mercury produces a definite pressure of about 1 lb. per square inch for every 2 inches in height. In practice, however, the inside of the glass tube gets coated with a dirty film, owing to the oxidation of the mercury, which prevents the attendant observing the exact position of the depressed end of the mercurial column.

Such a pressure gauge is, of course, inadmissible on board a ship or on a locomotive, owing to the jerking motion;

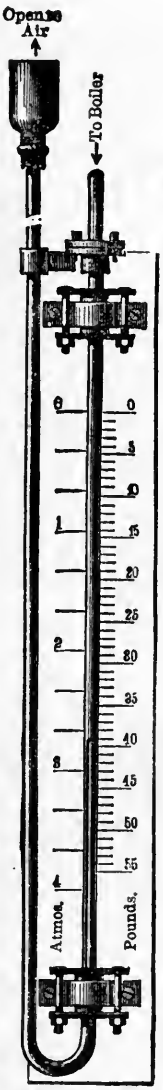

PRESSURE GAUGE.

VACUUM GAUGE.

and further, the length of the tube would have to be very great for the pressures now carried in high-pressure steam boilers (about 300 inches, or 25 feet for 150 lbs. on the square inch). For these reasons its use has been discarded in ordinary practice; but, as an exact and standard instrument for scientific purposes, and for testing and calibrating the working pressure gauges (which we are about to describe), it is indispensable. In all the best works where ordinary pressure gauges are made and tested, a long graduated vertical mercury column or gauge is supplied, with which these may be compared; and there, the inside of the glass is occasionally rubbed clean by a little cotton-wool fastened to the end of a wire and dipped in sulphuric acid.

Mercurial Vacuum Gauge.—This gauge indicates directly the *absolute* pressure inside a vessel such as the condenser of a steam engine, the suction pipe to an air-pump, or the vacuum pan of a sugar-refinery. The simplest form is shown by the second figure on the previous page. It consists of a vertical glass tube a little over 30 inches in length, with its lower end open and dipping into mercury contained in an iron bottle, while its upper end is attached to a brass cock and pipe connected with the vessel or condenser. A scale is fixed behind the glass tube graduated on the right hand into inches, and on the left hand into millimetres, but it would be more convenient if this latter scale were divided so as to show the absolute or the back pressure in lbs. per square inch due to an imperfect vacuum. The more perfect the vacuum, the higher the mercury rises in the tube, due to the atmosphere pressing on the mercury through a small hole near the top of the iron bottle. Every 2 inches of rise corresponds to a diminution of about 1 lb. of back pressure per square inch.

It does seem absurd that we should thus continue to register pressures in three or four different ways.

1. In lbs. per square inch above the atmosphere—*e.g.*, in the case of the pressure of steam in a boiler by ordinary steam gauges.

2. In inches of mercury from atmospheric pressure downwards, towards a perfect vacuum, or in lbs. per square inch below atmospheric pressure—*e.g.*, in the case of ordinary vacuum gauges attached to condensers.

3. In lbs. per square inch reckoned from a perfect vacuum, or what are termed lbs. per square inch absolute—*e.g.*, in the case of the back pressure during exhaust of a condensing engine.

If we universally adopted the last of these methods, there would be no confusion, and only one way of reckoning pressures—viz., from absolute zero. Condenser vacuum pressures would then range from 0 to 15 lbs., and boiler pressures from 15 lbs. upwards.

Bourdon's Pressure and Vacuum Gauges.—Steam pressures in boilers or pipes are usually indicated by Bourdon's pressure gauges, and negative or vacuum pressures in condensers, &c., by Bourdon's vacuum gauges, or by instruments of somewhat similar design and construction.

The construction of Bourdon's pressure gauges is clearly shown by the figures on the opposite page. Figure C shows the internal mechanism of such a gauge in its earliest and simplest form. Figures A and B show a sectional elevation and plan and a front outside view of a modern high-pressure gauge as made by Messrs. Schäffer & Budenberg. The internal mechanism of this modern form of gauge differs from the older forms only in the arrangement of details, so as to give correct readings at high pressures. The action of the gauge is as follows:—The steam, water, or gas enters by the cock (shown with the gauge in figure B) to the curved metallic tube, T. This tube is made of hard brass or steel, and has its upper end hermetically sealed. The cross-section of this tube is of a flat oval form, as

A

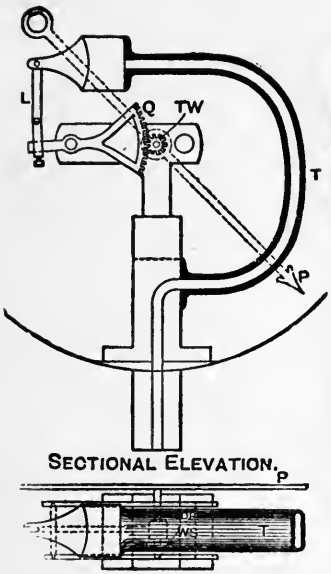

SECTIONAL ELEVATION.

PLAN.

B

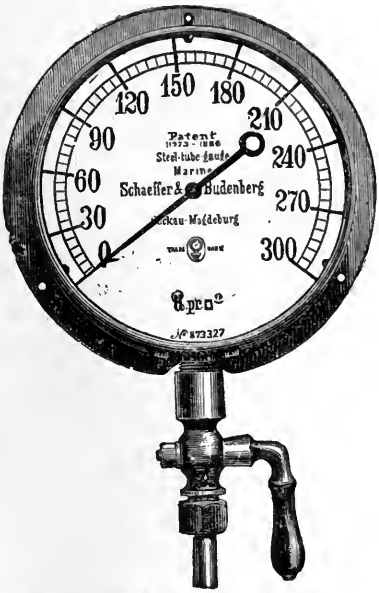

FRONT VIEW OF HIGH-PRESSURE GAUGE.

C

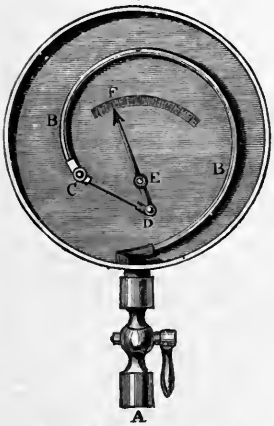

A

BACK VIEW OF EARLIEST FORM OF BOURDON GAUGE.

INDEX OF PARTS.

T	represents	Tube.
L	,,	Link.
Q	,,	Quadrant.
TW	,,	Toothed Wheel.
DP	,,	Distance Piece.
P	,,	Pointer.

D

Section of Tube

shown in figure D. It has its greatest breadth fixed perpendicularly to the direction in which the tube is curved. When the pointer is at zero (that is, when the pressure inside the tube is the same as that outside) the tube is in its normal state as regards shape and curvature. If, now, the pressure of the fluid contained in the tube be above the external or atmospheric pressure, the tube tends to become more and more circular in cross-section the greater the pressure within it, and the tube as a whole tends to straighten out, thereby pulling the link, L, upwards. This motion is transmitted to the quadrant, Q, and thence to the toothed wheel, T W, fixed on the same axis as the pointer, P, which latter moves over the scale.

Should the pressure within the tube be less than that of the surrounding atmosphere (as is the case when the instrument is measuring the vacuum of a condenser), then the cross-section of the tube becomes flatter than its normal or ordinary shape, and, consequently, the closed end of the tube curves inwards, thus moving the pointer, P, in the other direction.

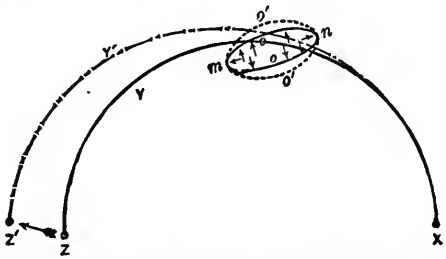

DIAGRAM SHOWING THE ACTION OF THE BOURDON TUBE UNDER PRESSURE.

The discovery of the peculiar action of the tube in a Bourdon gauge is exceedingly interesting. M. Bourdon was engaged trying to restore to its original circular section the worm-pipe of a still which had become flattened. He endeavoured to do so by pumping water into the pipe at a great pressure, knowing that the section of the pipe would conform to the shape consistent with greatest strength, which, of course, is the circular shape. During the experiment, however, it was observed that not only did the shape of the cross-section tend to change, but the tube as a whole tended to straighten out. The observation of these facts thus led M. Bourdon to usefully apply a bent oval tube in the form of a gauge for measuring fluid pressure.

The following is an explanation of the action which takes place:—Let X Y Z represent the curve of the tube in its normal state, Z, being the free or movable end. Let *m o n* represent the cross-section of the tube when the pressure inside is balanced by, or equal to, that outside. It is shown by higher geometry that when a flexible and inextensible surface is bent simultaneously in two directions at right angles to each other, that the product of the *curvatures*,* in these directions, *is a constant quantity*. Now

* The *curvature* of a line at any point is the reciprocal of the *radius of the curve* at that point. The *curvature* of a circle is constant and equal to $\frac{1}{r}$, where r is the radius of the circle.

the tube of a Bourdon's gauge is bent in such a manner—for it is bent in the direction of its length, and also at right angles to this direction. Let r_1, r_2 be the radii of these two curves, the latter being the curve of the cross-section. Then by the above theorem,

$$\frac{1}{r_1} \times \frac{1}{r_2} = \text{constant.}$$

From this equation it follows that when one factor of the term on the left-hand side increases the other factor must decrease, and conversely. Now this is really what happens. When the pressure of the fluid inside the tube is increased the cross-section tends to become rounder, like the dotted lines, *m o' n*, that is, the *radius of the curve*, r_2, becomes *less*. Consequently, the *curvature* is greater than before, so that the curvature, $\frac{1}{r_1}$, of the tube in the direction of its length is less than before, which means that the tube has straightened out into some position such as X Y' Z'. The pointer is thus moved to positions which have been marked by trial to correspond with the excess of pressure inside the tube above that outside. The reverse of this takes place when the pressure within the tube is less than that outside—*i.e.*, the curvature of the cross-section becomes less, whilst that of the tube becomes correspondingly greater.

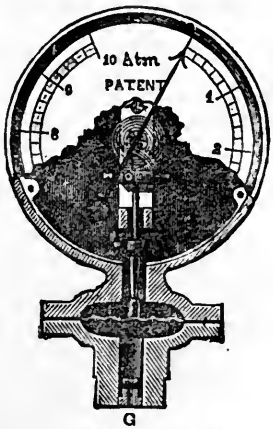

G
SCHÄFFER'S GAUGE.

Schäffer's Gauge. — Another form of gauge, which represents Schäffer's patent, is shown in the accompanying figure, the difference between it and the Bourdon patent being, that the former relies upon the natural elasticity of a concentrically corrugated steel plate placed across the hollow opening in the flange of the pipe, G, which communicates with the boiler or condenser. The centre of this corrugated plate is attached by a clip and rod to the toothed quadraut as shown. When the pressure is greater than that of the atmosphere, the corrugated plate is bulged upwards, and when it is less, it is bulged downwards. These motions, being proportional to the pressures per square inch, are correspondingly indicated on the graduated dial by the pointer.

Pressure Pyrometer.—In Lecture III., under the heading of Pyrometers, we referred to this instrument, which depends for its action upon the fact that the pressure of a gas, generated from a liquid with which it is in direct communication, corresponds to the temperature of the liquid. The name given to it by the makers is the **Thalpotasimeter**, and it is constructed, as may be seen from the following figures, of a metal stem, containing the liquid, and ending in a Bourdon or Schäffer gauge. The metal stem is shown fixed in the first case into a pipe, and in the second case into a flue, through which hot gases are passed. Their temperature inside the pipe or the flue is communicated to the

stem of the instrument, and therefore to the liquid within it. If water be placed within the stem, then the pressure (and consequently the

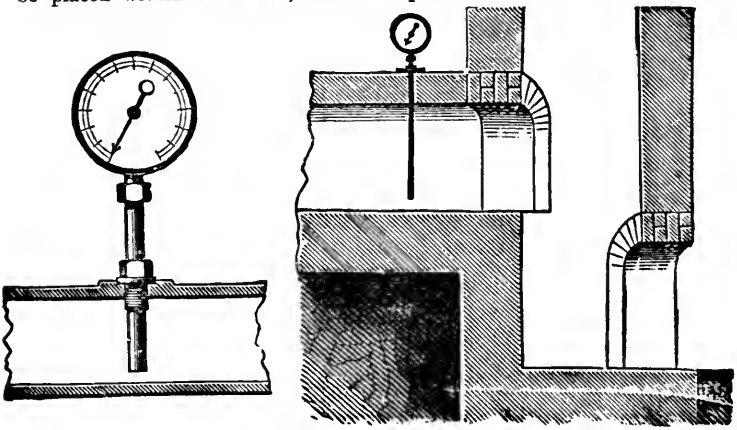

PRESSURE PYROMETERS OR THALPOTASIMETERS.

temperature) rises in accordance with Regnault's tables. Instruments filled with ether are made and graduated from 100° to 220° Fah.; those filled with water, from 212° to 680° Fah.; and those filled with mercury, up to 1,400° Fah.

Lecture VII.—Questions.

1. What is the distinction between sensible and latent heat?
2. Describe an experiment by which you could show that heat becomes latent when water is converted into steam.
3. What is meant by saying that the latent heat of steam is 966·6? Point out the sources of error in Black's experiment when he tried to find the latent heat of steam.
4. How would you ascertain the pressure of the vapour of water at a temperature above 212° F.? Describe some method of conducting the experiment.
5. When you speak of the "latent heat of steam," what property of steam do you refer to? State the numerical value of the latent heat of steam at 212° F. A pound of water at 212° F. is passed into 20 lbs. of water at 70° F., what is the final temperature? *Ans.* 76°·7.
6. From the table of Regnault's results, plot out a curve showing the rise in pressure of steam with increase of temperature.
7. How many pounds of ice at 32° F. will be converted into water at 40° F. by mixing it with 6 lbs. of water at 160° F.?

6 lbs. of water *gives* up $6\,(160° - 40°) = 720$ units.

1 lb. of ice *takes* up $143 + (40 - 32) = 151$,,

$\therefore\ 720 \div 151 = 4{\cdot}768$ lbs.

8. Into 1 cwt. of water at 45° F. is poured 20 lbs. of water at 160° F., and then 4 lbs. of ice at 32° F. are added. What is the final temperature when the ice has just melted?

Water	112	$(45° - 32°)$	=	+ 1456	units of heat from 32° F.
Water	20	$(160° - 32°)$	=	+ 2560	,, ,,
Ice	4	× 143	=	− 572	to convert 4 lbs. ice into water.
Total	136 lbs. mixture =			3444	units left.

$\therefore\ 3444 \div 136 = 25{\cdot}32$ above 32° or 57°·32 F.

9. If the heat which just melts 8 lbs. of ice at 32° F. were applied to 30 lbs. water at 60° F., to what temperature would the water rise?

$8 \times 143 = 1144$ units of heat required to melt the ice.

Now, 30 lbs. of water raised 1° F. = 30 units of heat,

$\therefore\ 1144 \div 30 = 38°{\cdot}13$ F. of rise from 60° F. or 98°·13 F.

10. There are mixed together 200 lbs. of water at 100° F., 3 lbs. steam at atmospheric pressure, and 15 lbs. of ice at 32° F. What is the resulting temperature when all the ice is just melted?

The 200 lbs.	water	has	+	13,600 u,	more than	water at 32° F.
,, 3 ,,	steam	,,	+	3,438	,,	,, ,,
,, 15 ,,	ice	,,	−	2,145	less	,, ,,
$\therefore$ 218 ,,	mixture	,,		14,893	more	,, ,,

And $14{,}893 \div 218 = 68°{\cdot}3$ F. above 32 = 100°·3 F.

11. Define the terms *latent heat, foot-pound, thermal unit.* Write down the number which expresses the latent heat of steam at 212° F., and explain how that number is arrived at.

12. When does heat become latent? What do you understand by the expression *latent heat of steam?* What unit is adopted for measuring and comparing quantities of heat? Write down the number expressing the latent heat of steam at 212° F.

13. What is the thermal unit employed in this country? State its measure in foot-pounds. How many thermal units are expended in converting one pound of water at 60° F. into one pound of steam at 212° F.? *Ans.* 1,118.

14. Distinguish between the sensible and latent heat of steam. How many thermal units must be added to 1 lb. of water at 32° F. to raise it to 212° F. and evaporate it into steam? How many of these units go to sensible and how many to latent heat? *Ans.* 1,146 B.T.U.; 180 B.T.U.; 966·6 B.T.U.

15. Write a brief essay explaining what you consider "sensible" and "latent" heat to be; and illustrate the same by means of one or two examples.

LECTURE VII.—A.M.INST.C.E. QUESTIONS.

1. In a certain engine trial it was found that temperature of boiler = 370° F.; feed-water used = 14 lbs. per I.H.P. per hour; temperature of feed = 115° F. Assuming the boiler to supply dry steam, find the expenditure of heat in thermal units per I.H.P. per minute, and compare it with the work done. *Ans.* 277·5 B.Th.U. per H.P. minute; thermal efficiency, ·154.

2. In a certain engine trial it was found that—Temperature of boiler = 350° F.; feed-water used = 15 lbs. per I.H.P.-hour; temperature of feed = 100° F. Assuming the boiler to supply dry steam, find the expenditure of heat in thermal units per I.H.P. per minute, and compare it with the work done. *Ans.* ·14.

3. If water is supplied at 60° F. and evaporated at 120 lbs. pressure per square inch (t = 341° F.), how many lbs. of water will be evaporated by 5,000 thermal units? Give full details of your working, and calculate each portion of the heat addition to the water separately. *Ans.* L = 877·4, S = 281, H = 1,158; 4·3 lbs. evaporated.

4. Calculate in British thermal units the external and internal heat per pound of saturated steam, which is supplied from a boiler working at a pressure of 100 lbs. per square inch (absolute).

Number of cubic feet per lb. of steam, . .	4·37
Total heat of evaporation from 32° F., . .	1,182 B.T.U.
Temperature of steam, ...	328° F.

Ans. 80·89 B.T.U. external; 805·4 B.T.U. internal.

LECTURE VIII.

CONTENTS.—The successive effects produced by the continuous application of Heat to a piece of very cold Ice until Dissociation takes place—The boiling point of a Liquid—Experiment of Water boiling at pressures less than one Atmosphere—Use of large Air Pumps in connection with Condensers—Total Heat of Evaporation.—Questions.

WE shall best understand the physical properties of steam and the results arrived at by Regnault, by considering, in the first place, the several changes which take place in water—from its solid condition, ice, until it becomes dissociated under the continuous application of heat.

These figures are purely imaginary and not to scale.

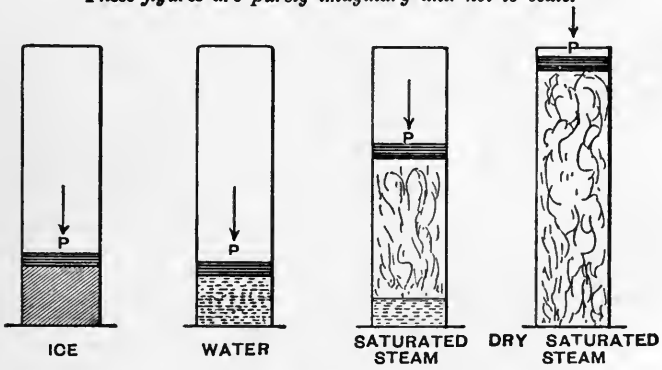

Referring to the figure, suppose that we put 1 lb. of very cold ice in the bottom of an open-mouthed cylinder, and place a piston on it, which, together with the pressure of the atmosphere, exerts a pressure of p lbs. on the square inch.

STAGE 1.—On the application of heat to the bottom of the cylinder, the ice is gradually heated until it arrives at 32° F.

STAGE 2.—The temperature now remains constant until all the ice melts and becomes converted into water. The bulk of the water being less than that of the ice from which it is formed, the piston descends a very little. As we have already noticed

in Lecture VII., 143 units of heat must be communicated to the 1 lb. of ice at 32° F. before it is all melted into water at 32° F.

STAGE 3.—Still applying heat, the water increases in temperature while the bulk diminishes, until 39° F. is reached (the maximum density point of water); thereafter, the volume gradually increases, but in a very slight degree, with the rise in temperature, until a little above 212° F. is reached, the limiting temperature of the water depending on the pressure, p, lbs. on the square inch (see Regnault's tables). Had the pressure on the piston been nothing more than that due to the normal pressure of the atmosphere, viz., 14·7 lbs., corresponding to a barometric height of 29·9 inches, then the water would have been converted into steam at a temperature of 212° F.

STAGE 4.—The temperature remains stationary at that limit value, and the formation of steam commences, the piston rising as more and more of the water is evaporated. So long as any water remains at the bottom of the cylinder, we are producing what is called *saturated steam*, or wet steam. This is the condition of steam usually supplied to engines from ordinary boilers having small steam space or no steam dome.

STAGE 5.—When all the water in the bottom of the cylinder has been evaporated, and *just* when all the water or aqueous particles held in suspension with the steam have been converted into steam, we obtain *dry steam*, or what is sometimes termed *dry saturated steam;* then 966·6 units of heat must have passed into the contents of the cylinder, for, as we have already noticed in Lecture VII., 966·6 units of heat must be communicated to the 1 lb. of water before it is all converted into steam at 212° F. The ratio of the weight of dry steam to the total weight of steam and water is termed the *dryness fraction*. If x be the weight of dry steam in 1 lb. of wet steam, then $(1 - x)$ is the weight of water held in suspension. When $\frac{9}{10}$ of the vapour is steam, then $\frac{1}{10}$ is water, or 10% of water is in suspension.

STAGE 6.—If more heat be added to the dry steam in the cylinder, the pressure, P, on the piston remaining the same, the temperature will again begin to increase, and we get what is termed *superheated steam*. The more it is heated, the more nearly do its properties approach to those of a perfect gas. If the top of the cylinder had been closed from the commencement of stage 3, the pressure would have risen with the temperature until the commencement of stage 6, in accordance with Regnault's tables, given at the end of last Lecture; but during stage 6 we communicate more heat to the steam than its pressure would indicate by the tables. Superheated steam up to 500° or even 600° F. is now used for engines. The various reasons for its

rapid adoption are given later on in Lecture XIV., &c. (see Index).

STAGE 7.—Steam cannot be heated indefinitely without a molecular change taking place, termed *dissociation*, when it separates into constituent gases—hydrogen and oxygen. This action is practically carried out in the process of making "water gas," by blowing dry steam over very hot plates before carbonising it, ready for illuminating purposes.

Thus the successive effects produced by the continuous application of heat to a piece of very cold ice are:—

1. Heating ice up to 32° F.
2. Melting ice, absorption of latent heat, 143 units per lb.
3. Heating water up to boiling point.
4. Formation of saturated steam, no increase of temperature.
5. Formation of dry steam, due to the complete absorption of the latent heat, or 966·6 units per lb. of water.
6. Superheated steam, increase of temperature above stage 3.
7. Dissociation or formation of hydrogen and oxygen.
8. Heating, no further alteration of the physical state.

Boiling Point.—Before treating of the "total heat of evaporation," we shall digress a little to consider what is meant by the boiling point, or the temperature of ebullition.

The boiling point of any liquid is that point on the temperature scale, when the pressure throughout its mass just overcomes the surrounding pressure. The temperature of the boiling point, therefore, depends directly on the *pressure* under which the liquid is evaporated, and the greater the pressure the higher the temperature at which it boils.

The boiling points of fresh water at different pressures are approximately as follows (compare this with Regnault's table in Lecture VII.):—

Under a pressure of	½	atmosphere,	123° Fah.
,,	¾	,,	150° ,,
,,	1	,,	179° ,,
,,	1	,,	212° ,,
,,	2	,,	249° ,,
,,	3	,,	273° ,,
,,	4	,,	291° ,,
,,	5	,,	306° ,,
,,	6	,,	319° ,,

It is thus clear that water will boil or give off steam far below, as well as far above, its normal boiling point, 212° F.

To illustrate this take a glass flask half full of water with a thermometer in it, heat it over a spirit lamp or Bunsen burner

until the water just begins to boil and the temperature, as registered by the thermometer, is 212° F. Now attach it, as shown, to an air-pump, A P, by a flexible india-rubber tube, and begin extracting the air. The water is observed to boil violently, although it may have cooled down to as low as 180° F. This plan of attaching it to the air-pump is much better than that of placing it under the glass-bell jar of the pump, as it permits the thermometer being easily seen after the moist steam has begun to rise.

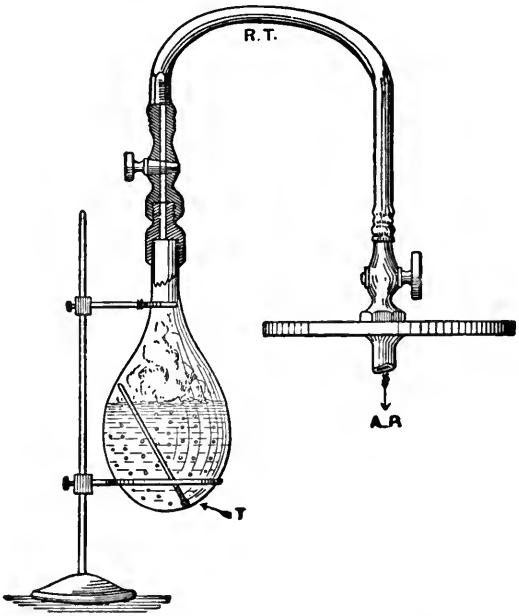

If an air-pump is not at hand, the following simple experiment will illustrate the fact equally well to a class:—After heating the water in the flask to 212° F., and letting it boil freely for a minute to expel the air, cork it up quickly and tightly, leaving a thermometer inside. Now pour cold water on the outside of the flask, the water will at once begin to boil, although the temperature may be now below 200° F. It ceases to boil, however, if you stop cooling it. Why? Because the pressure of the vapour generated equals that of the natural pressure of the water; but condense this vapour by a second application of cold

water, and again it begins to boil, even with the temperature below 180° F. A knowledge of these facts is most important to the engineer, for it shows him that in the condensers of large engines, he must provide air-pumps of sufficient capacity to carry off the steam vapour generated at even low temperatures. On one occasion an engineer friend of the author's, over-

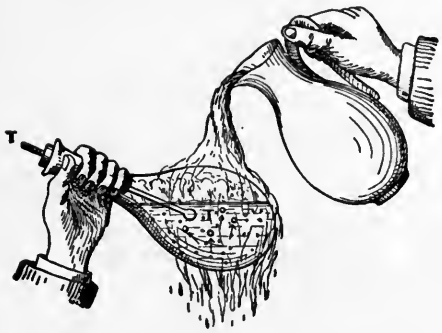

looking this point, put in a set of very small air-pumps to a pair of marine engines which he was constructing, under the impression (due to miscalculation) that all that was necessary was to lift the condensed water, and that marine engineers generally, were putting on air-pumps out of all proportion to the work to be done! He soon discovered his mistake, for, on the day of the trial trip, he could not keep up a vacuum above a few inches. In addition to the steam vapour which is generated at pressures below the atmospheric pressure, any air which may have come over with the steam at once expands on a reduction of pressure, and has to be sucked away at every stroke, otherwise it will spoil the vacuum. We shall refer to this point again when we come to treat of condensers and air-pumps.

The experiment of raising the boiling point by raising the pressure is easily done. Procure a flask, as in the former experiment, with a tight-fitting stop cock. Half fill the flask with water, heat it with the cock open until the water boils and all the air has been expelled, then shut the stop cock. The steam now generated rises in pressure and temperature. The increasing pressure raises the boiling point and thus stops the violent ebullition, unless heat is applied very rapidly. Allow the temperature to rise, say to 240° F., then slightly open the cock, ebullition is at once observed, although the pressure is equal to two atmospheres above a perfect vacuum.

LECTURE VIII.—QUESTIONS.

1. Describe in your own words the several effects which take place in succession on applying heat to a lump of ice enclosed in a cylinder. Distinguish between saturated steam, dry saturated steam, and superheated steam.

2. How much ice at 0° C. will be converted into water at 5° C. by mixing it with 10 lbs. of water at 80° C.? *Ans.* about 9 lbs.

3. The latent heats of 1 lb. of water and 1 lb. of steam are respectively 143 and 966·6 according to the Fah. scale; work out in full by proportion what they are according to the Cent. scale. *Ans.* 79·4 and 537.

4. How many British units of heat are required to raise 1 cubic foot of water (62·5 lbs.) from 15° C. to 100° C.? *Ans.* 9562.

5. What is the resulting temperature on mixing 20 cubic feet of water at 212° F. with 100 cubic feet at 10° C.? *Ans.* 77° F.

6. The diameter of a cylinder is 20 inches, steam is admitted at a pressure of 100 lbs. on the square inch; what is the total pressure in lbs.? *Ans.* 31,416 lbs.

7. Steam blows off at 60 lbs. pressure from a boiler by gauge, the barometer stands at 29 inches; what is the temperature of the water in the boiler? *Ans.* 307°·4 F.

8. Account for the use of larger air-pumps with condensing engines than would merely suffice to lift the weight of water in the condenser.

9. What is meant by the "dryness fraction," and how is it estimated?

10. How many units of heat would be absorbed in raising 18 lbs. of steam of atmospheric pressure from water at 65° F.? *Ans.* 20,000.

11. How much water at 55° F. could just be brought to the boiling point by the latent heat given up by 2 lbs. of steam at atmospheric pressure being condensed. *Ans.* $(966 \times 2) \div 157 = 12{\cdot}3$ lbs.

12. What are *saturated*, *superheated*, and *wet* steam respectively? Why is there a loss of efficiency in using wet steam? Define a thermal unit, and explain the method of measuring the latent heat of steam.

13. If one pound of Newcastle coal develops 12,000 units of heat by its complete combustion, how much water at 60° F. should be converted into steam at 212° F. by the consumption of 1 cwt. of such fuel, assuming that there is no loss of heat during the operation? *Ans.* 1,201·5 lbs.

LECTURE IX.

CONTENTS.—Total Heat of Evaporation—Quantity of Water required for Condensation of Steam, with Examples—Questions.

Total Heat of Evaporation.—The total heat of evaporation is the sum of the sensible and the latent heats of evaporation, and is approximately a constant quantity for pressures near the atmospheric pressure.

The heat required to elevate the temperature of 1 lb. of water from the freezing point, 32° F., to the temperature of evaporation, is called the *sensible heat*,* and the additional heat required to evaporate it is termed the *latent heat* (see Lecture VII.)

The total heat of evaporation for water is, therefore, the quantity of heat in thermal units necessary to raise 1 lb. of water from the freezing point, 32° F., to the particular temperature at which it is being evaporated, and to evaporate it at that temperature.

Let H stand for the Total heat of evaporation in B.T.U.
S „ „ Sensible heat „ „
L „ „ Latent heat „ „
Then, $H = S + L$.

Now, since we have defined a unit of heat to be the quantity of heat necessary to raise 1 lb. of water by 1° Fah., the amount of heat imparted to 1 lb. of water, in raising its temperature from 32° F. to 212° F., must be $(212 - 32) = 180$ such units.† Therefore the *sensible heat* of steam at 212° F., is said to be 180 units per lb. or 180. Again, we saw, Lecture VII., that the *latent* heat of steam at 212° F. was in round numbers 966 units per lb or 966.

* Of course, if the water is of higher temperature than 32° F. to start with, the heat required to be applied to it to bring it up to the point of evaporation is correspondingly less.

† We here neglect, for the sake of simplicity, the addition to our former definition of this unit (see Lecture IV.)—"water at its maximum density point," and, therefore, the very slight difference in the sensible heat caused by the increase of the specific heat of water as it rises in temperature. This difference simply amounts to that between 180 units and 180·9.

GRAPHICAL REPRESENTATION OF THE CHANGES FROM ICE INTO WATER, AND WATER INTO STEAM AT ATMOSPHERIC PRESSURE, DUE TO THE ABSORPTION OF HEAT, WITH THE CORRESPONDING TEMPERATURES AND VOLUMES.

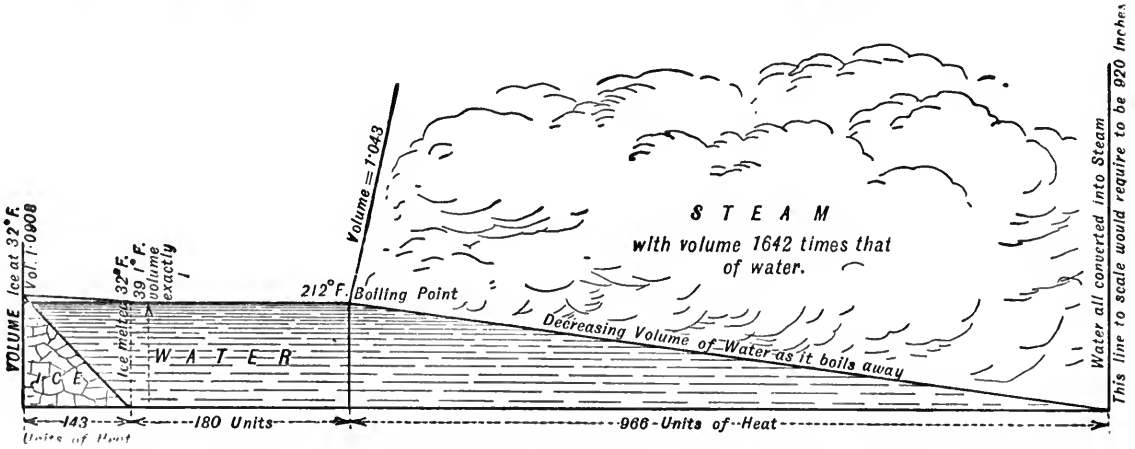

Explanation of Diagram.—Distances measured horizontally from the left indicate units of heat absorbed, while distances measured vertically indicate volumes. We commence with ice occupying a volume of 1·0908. The application of heat to the ice (which is supposed to be at 32° F.) immediately begins to melt it, and when 143 units per lb. have been absorbed, the whole of the ice is melted, and we have water occupying a volume 1·000127. The further application of heat causes the volume of this water first to decrease to 1 (at a temperature of 39°·1) and then again to increase to 1·043 at boiling point. After this, the application of each unit of heat causes $\frac{1}{966}$ part of the water to pass away as steam, and when 966 units per lb. have been absorbed the whole of the water has passed into steam, which now occupies a volume 1642 times that of the water from which it was produced.

Therefore the *total heat* of steam at that temperature must be—

$$\begin{aligned} H &= S + L \\ &= 180 + 966 \\ &= 1{,}146 \text{ Units of Heat.} \end{aligned}$$

If steam is generated at a higher temperature than 212° F., the sensible heat increases, and the latent heat decreases.

The following formula, deduced from Regnault's experiments, gives approximately the *latent heat* of steam produced at other temperatures Fah. :—

$$L = 966 - 0{\cdot}7\,(t^\circ - 212^\circ).$$

Where L, is the latent heat, and t°, the temperature of evaporation on Fahrenheit scale.

Consequently, the total heat of evaporation, at any temperature, t°, must be—

$$\begin{aligned} H &= S + L \\ &= (t^\circ - 32^\circ) + 966 - 0{\cdot}7\,(t^\circ - 212^\circ) \\ &= 1{,}082 + 0{\cdot}3\,t^\circ. \end{aligned}$$

For example.—Let us find from this equation the total heat of steam at 212° F. Then $t^\circ = 212^\circ$ and $\cdot 3 \times 212 = 63{\cdot}6$, which, added to $1{,}082 = 1{,}146$, the same as before and in Table II.

The relation between the above heat quantities may be still further studied by comparing the following *Heat Family Tree* with Table II. in Lecture VII. and Example I. in Lecture XI.: —

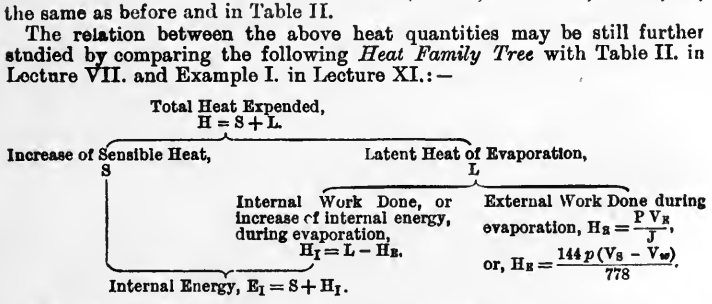
Total Heat Expended,
H = S + L.
Increase of Sensible Heat,
S
Latent Heat of Evaporation,
L
Internal Work Done, or increase of internal energy, during evaporation,
$H_I = L - H_E$.
External Work Done during evaporation, $H_E = \frac{P V_E}{J}$,
or, $H_E = \frac{144\,p\,(V_S - V_w)}{778}$.
Internal Energy, $E_I = S + H_I$.

For example, select from Table II. any pressure to test the above equations. Let $p = 100$ lbs. absolute, then we see from pp. 125, 126, that—

p	H	S	L	V_S	H_E
100	1,181·9	297·9	884	4·403	81·17

Here, $H = S + L = 297{\cdot}9 + 884 = 1{,}181{\cdot}9$ B.T.U.

And $H_E = \frac{144\,p\,(V_S - V_w)}{778} = \frac{144 \times 100\,(4{\cdot}403 - {\cdot}016)}{778} = 81{\cdot}17$ B.T.U.

$\therefore$ $H_I = L - H_E = 884 - 81{\cdot}17 = 802{\cdot}83$ B.T.U.

And $E_I = S + H_I = 297{\cdot}9 + 802{\cdot}83 = 1{,}100{\cdot}7$ B.T.U.

But $H = H_E + E_I = 81{\cdot}17 + 1{,}100{\cdot}73 = 1{,}181{\cdot}9$ B T.U., *as above.*

We see from Table II. that, notwithstanding the decrease in the latent heat, *the total heat of evaporation* slowly increases. This point will be found to be of great importance in considering the expansive properties of steam, and one that will explain some curious phenomena connected therewith.

Quantity of Water required for Condensation.—We are now in a position to obtain a formula for determining the minimum weight of condensing water which must be directly mixed with 1 lb. of steam, in order that the mixture may be reduced to water at a certain temperature, or the temperature of the hot well.

The following is theoretically true:—

The Loss of Heat from the Steam = the Gain of Heat by the Water.

Now, let 1 lb. of steam at a temperature t_1° be subjected to an injection of x lbs. of water at a temperature t_2°, and let the result be water at a temperature t_3°.

Let H = total heat reckoned from 32° F., in 1 lb. of steam at t_1°, then $H = 1{,}082 + 3\,t_1^\circ$ B.T.U. Hence the *loss* of heat from 1 lb. of steam $= 1 \times \{H - (t_3 - 32)\}$ B.T.U., and the *gain* of heat by x lbs. of water $= x\,(t_3 - t_2)$ B.T.U., and these are equal.

$$\therefore 1 \times \{H - (t_3 - 32)\} = x \times (t_3 - t_2),$$

$$\therefore x = \frac{H - t_3 + 32}{t_3 - t_2} \text{ lbs.},$$

$$= \frac{1{,}082 + \cdot 3\,t_1 - t_3 + 32}{t_3 - t_2} \text{ lbs.},$$

$$= \frac{1{,}114 + \cdot 3\,t_1 - t_3}{t_3 - t_2} \text{ lbs.}$$

If $t_1 = 212°$ F., then $x = \dfrac{1{,}114 + \cdot 3 \times 212 - t_3}{t_3 - t_2}$ lbs.,

$$= \frac{1{,}178 - t_3}{t_3 - t_2} \text{ lbs.}$$

We wish to impress upon the student the fact that these formulæ are only approximate expressions for experimental results which are best given in tables; when they are available the tables should be used.

An example or two will illustrate the above rule and fix the principle in the memory, as well as clearly show the difference between the mixing of two quantities of water, and a quantity of steam and water. These questions are more easily performed on the Cent. than on the Fah. scale, as we will see afterwards, owing to the inconvenience of having to always subtract 32 at every turn on the Fah. scale, to reduce the temperatures to the starting point of water.

EXAMPLE.—If 1 lb. of water at 212° F. be mixed with x lbs. of water at 60° F., what is the value of x when the resulting temperature is 100° F.?

The Loss of Heat from the Water at 212° *F.* = *the Gain of Heat by the Water at* 60° *F.*

$$\therefore\ 1 \times (212^\circ - 100^\circ) = x \times (100^\circ - 60^\circ),$$

$$\therefore\ 112 = 40\,x,$$

$$\therefore\ x = \frac{112}{40} = 2{\cdot}8 \text{ lbs.}$$

Again—If 1 lb. of steam at 212° F. be mixed with x lbs. of water at 60° F., what is the value of x when the resulting temperature is 100° F.?

The Loss of Heat from the Steam at 212° *F.* = *the Gain of Heat by the Water at* 60° F.

The 1 lb. of steam at 212° F. *loses* $1 \times \{1146 - (100^\circ - 32)\}$ B.T.U.

The x lbs. of water at 60° F. *gains* $x \times (100^\circ - 60^\circ)$ B.T.U.

$$\therefore\ 1 \times \{1146 - (100^\circ - 32^\circ)\} = x \times (100^\circ - 60^\circ).$$

$$\therefore\ 1078 = 40\,x,$$

$$\therefore\ x = \frac{1078}{40} = 26{\cdot}95 \text{ lbs.}$$

We thus see the great effect of the latent heat of steam. It only requires 2·8 lbs. of water at 60° to produce the same temperature result on *water* at 212°, that 26·95 lbs. of water can do on *steam* at the *same* temperature.

Lecture IX.—Questions.

1. If a pound of water at 212° F. be mixed with x pounds of water at 60°, what is the value of x when the resulting temperature is 120°? Again, if a pound of steam at 212° F. be mixed with y pounds of water at 60°, find y when the resulting temperature is 120°. Account for the difference between x and y. *Ans.* $x = 1{\cdot}53$ lbs.; $y = 17{\cdot}6$ lbs.

2. What is the latent heat of steam? If a quantity of steam weighing one pound, and at temperature of 212° F., is condensed in 100 lbs. of water at 60° F., what is the resulting temperature? *Ans.* 71·06°.

3. In a jet condenser the temperature of the condensing water is 60° F. and that of the entering steam is 193° F. Also the condenser remains at a temperature of 120°. Under these conditions find the weight of condensing water per pound of steam which enters the condenser. *Ans.* 17·53 lbs.

4. If there pass at the same time into the condenser, and from thence into the hot-well, 2 tons of water at 55° F. and 1·5 cwt. of steam at atmospheric pressure, what will be the resulting temperature? *Ans.* 95·6° F.

5. Hot-well 105° F., injection 53°, and steam at atmospheric pressure. Required number of pounds of steam condensed by 4 cubic feet of the injection water. *Ans.* 12·1 lbs.

6. Temperature of injection water 60° F., temperature of hot-well 100° F., latent heat of exhaust steam 1,016 units, its temperature being 140° F.; find the pounds of injection water required per pound of steam condensed. *Ans.* 26·4 lbs.

7. The cylinder of an engine is 74 inches in diameter, and the stroke is 5·5 feet; what is the capacity of the cylinder in cubic feet? How many pounds of water must be evaporated in order to fill the cylinder with steam at a pressure of 15 lbs. absolute (atmospheric pressure), it being given that steam of that pressure occupies 1,642 times the volume of the water from which it is generated? *Ans.* 164·3 cubic feet; 6·24 lbs.

8. An engine working without expansion has a piston of 144 square inches in area with a 12-inch stroke, and the number of double strokes per minute is 60. Steam is supplied at a temperature of 293° F. (the volume of 1 lb. of steam at 293° F. being 7 cubic feet), find units of heat required per minute for steam from water at 60° F. *Ans.* 19,570.

9. Define the term "*latent heat*," and distinguish between the heat expended in external work and that expended in internal work during evaporation. Find in foot-pounds the external work done in converting 1 lb. of water at 212° F. into steam at 212° F., having given volume of 1 lb. of water = ·016 cubic foot. Volume of 1 lb. of steam at 212° F. = 26·4 cubic feet. Pressure of steam at 212° F. = 14·7 lbs. per square inch. Find also the internal work done. *Ans.* 55,850 ft.-lbs.; 696,000 ft.-lbs.

10. A unit of heat is sometimes expressed in thermal units and sometimes in foot-pounds. Explain the meaning of this distinction. How many foot-pounds of work are done in converting one pound of water from a temperature of 104° F. into steam at 328° F. corresponding to an absolute pressure of 100 lbs. per square inch? If the volume of 1 lb. of steam, at the above temperature and pressure, be 4·33 cubic feet; find external work done during formation, and weight of steam used per hour per horse-power. *Ans.* 1,108 B.T.U. = 862,600 ft.-lbs.; 62,120 ft.-lbs.; 31·8 lbs.

LECTURE X.

CONTENTS.—Examples of the Quantity of Water required for Condensation of Steam with a Jet Condenser continued—Also with a Surface Condenser—Tube Surface required under different conditions.—Questions.

Now, let us try the same two questions given in the last Lecture, but on the Cent. scale, if for no other purpose than to observe the great advantage of using that scale.

Either referring to our comparative table of thermometer scales, or by calculation (Lecture III.), we observe that—

212° F. corresponds to 100° C.
60° F. „ 15°·5 C.
100° F. „ 37°·7 C.
and 1146 units on F. scale = 637 on C. scale.

∴ Taking the first example of 1 lb. of water at 100° C., mixed with x lbs. of water at 15°·5 C., the resulting temperature being 37°·7 C., &c.

The Loss of Heat from the Water at 100° *C. = the Gain of Heat by the Water at* 15°·5 *C.*

$$\therefore\ 1 \times (100^\circ - 37^\circ{\cdot}7) = x \times (37^\circ{\cdot}7 - 15^\circ{\cdot}5),$$

$$\therefore\ 62{\cdot}3 = 22{\cdot}2\,x,$$

$$\therefore\ x = \frac{62{\cdot}3}{22{\cdot}2} = 2{\cdot}8 \text{ lbs.}$$

Again, taking the second example of 1 lb. of steam at 100° C., mixed with x lbs. of water at 15°·5 C., the resulting temperature being as before 37°·7 C.

The Loss of Heat from the Steam at 100° *C. = the Gain of Heat by the Water at* 15°·5 *C.*

$$\therefore\ 1 \times (637 - 37^\circ{\cdot}7) = x \times (37^\circ{\cdot}7 - 15^\circ{\cdot}5),$$

$$\therefore\ 599{\cdot}3 = 22{\cdot}2\,x,$$

$$\therefore\ x = \frac{599{\cdot}3}{22{\cdot}2} = 26{\cdot}9 \text{ lbs.}$$

If we had taken round numbers on the Cent. scale, as we did on the Fah. the advantage would have been still more apparent. We give another example on the subject of our last lecture more in accordance with what takes place in actual practice. The points we have hitherto considered were meant to lead up to this one. We shall again refer to this question of the

quantity of water required for condensation when we come to compare the relative efficiencies of jet and surface condensers.

EXAMPLE.—A vacuum gauge placed in the exhaust pipe of a low-pressure cylinder indicates 26 inches, while the mercurial barometer stands at 30 inches. The temperature of the hot-well is 100° F., what is the minimum weight of injection water at 60° F. that will produce this result per pound of steam entering the condenser ?

Let 30 in. by barometer correspond to 15 lbs. per square inch absolute ; then,

$$30 \text{ in. } : 26 \text{ in. } :: 15 : y$$

$$y = \frac{15 \times 26}{30} = 13 \text{ lbs. per square inch.}$$

Therefore, a 26-inch vacuum corresponds to a pressure in the exhaust pipe of $(15 - 13) = 2$ lbs. per square inch absolute. Now, this pressure corresponds closely to a temperature of 126° F. $= t_1$ (see p. 86).

The Loss of Heat from the Steam at 126° *F.*
$=$ *the Gain of Heat by the Water at* 60° *F.*

The 1 lb. of steam at 126° F. *loses* $1 \times \{1082 + \cdot 3t_1 - (100° - 32°)\}$,
$= 1052$ B.T.U.

The x lbs. of water at 60° F. *gains* $x \times (100° - 60°)$,
$= 40\,x$ B.T.U.

$$\therefore \quad 1052 = 40\,x,$$

$$\therefore \quad x = \frac{1052}{40} = 26{\cdot}3 \text{ lbs.}$$

It will thus be clear on comparing this result with the last example in Lecture IX., that almost the same weight of water is required per pound of steam, whether the steam exhausts at atmospheric pressure or not, for it is the 966 units of *latent heat* which the injection water has to contend with, more than the few units of *sensible heat* in the steam.

We observe that the hot well was 100° F. This gives off steam vapour corresponding (see Regnault's tables, Lecture VII.) to an absolute pressure of ·942 lb. on the square inch, or about equivalent to a 28-inch vacuum, supposing no air to be let free from the water. Of course, if air is set free, it will reduce the vacuum still further without a corresponding rise in temperature ; this suggests the advisability, explained later,

of freeing from air as far as possible all feed-water to a boiler, especially when working with surface condensers.

In practice the hot-well water in sea-going steamers is kept at between 110° and 120° F. In order to do this, the cubic capacity of the jet condenser should not be less than one-third that of the cylinders exhausting into it, and the weight of injection water (at a velocity of 30 feet per second) in temperate climates from 25 to 30 times that of the steam, or from 30 to 35 times in the tropics. In the Red Sea the temperature of the sea water near surface in the summer season often exceeds 85° F.

The jet condenser has now, however, been almost entirely superseded by the surface condenser, owing to its many important advantages, which will be fully detailed when we come to describe marine engines using high-pressure steam. Owing to the fact that the condensing water does not come into direct contact with the exhaust steam, the temperature of the former is not raised quite so much as with the jet condenser, in practice it is probably never raised much more than 40° F., so that a slightly larger quantity of it is required. The condensing water is forced by means of a circulating pump through a double or treble series of brass tubes about $\frac{3}{4}$ inch external diameter, and generally ·048 inch thick. Usually the water is sent first through the lower tier of tubes, and then through the upper, thereafter discharging freely through the ship's side into the sea, so that the exhaust steam impinges against the sides of the warmer or upper set of tubes.

Suppose the exhaust steam to enter the condenser at a mean absolute pressure of 3 lbs., corresponding to a temperature of 142° F. (t_1), and to be condensed into water at 120° F. (t_2); also, that the circulating water enters at 60° F. (t_3), and is discharged at 100° F. (t_4), how many pounds of circulating water will be required per pound of steam?

The Total Loss of Heat from Steam = the Total Gain by Water.

$$1 \text{ lb. } \{(1082{\cdot}4 + {\cdot}3t_1) - (t_2 - 32)\} = x \text{ lbs. } (t_4 - t_3).$$

$$1\{(1082{\cdot}4 + {\cdot}3 \times 142) - (120 - 32)\} = x(100 - 60)$$

$$1037 = 40x; \therefore x = 25{\cdot}9 \text{ lbs.}$$

So we see that with the least practicable loss in heat of the steam and the highest desirable gain of heat by the water, not less than 26 lbs. of water are required with the surface condenser, whereas with the same temperature loss in steam and rise of water temperature from 60° to 120°, the theoretical quantity of water required with the jet condenser would only have been about 17 lbs. It is usual to allow about 40 times the weight of steam for general traders and 50 times for ships always in the tropics.

Size of Surface Condensers.—The foregoing calculations are simple

interesting and instructive exercises for the student. They do not tell him the size of condensers adopted in practice. When ordinary low-pressure condensing engines were used, it was customary to specify for so many sq. ft. of condenser surface per indicated horse-power, exhausting at such and such a pressure—*e.g.*, "with a terminal pressure of 6 lbs. absolute, use 1·5 sq. ft. per I.H.P." Now, however, since the introduction of compound and multiple expansion engines, such a "rule of thumb" does not hold good, for it is evident that the weight of steam used and to be condensed, varies considerably for a given horse-power with the initial pressure. For example, two different engines indicating the *same power* and having the *same terminal pressure* may use the one steam of 60 lbs., and the other of 200 lbs. initial pressure; consequently, the weight of steam to be condensed is much less in the second case than in the first, and, therefore, a less condenser surface would suffice for it. A common rule is that of specifying a certain condenser surface per sq. ft. of boiler heating surface, and the author finds that one eminent firm adopts an average of ·7 sq. ft. per sq ft. of boiler heating surface with natural draught. In order, however, to place this matter more thoroughly before the student a table marked "Surface Condensers" has been added to this lecture, from which it will be seen that from 22 examples the most natural rule seems to be *the ratio subsisting between the condenser surface, and the product of the capacity of low-pressure cylinder with the terminal pressure*, which gives a mean of 3·24. It is very seldom that engineers go to the trouble of measuring either the weight of circulating water or its rise in temperature.

MEAN OF TWENTY-TWO EXAMPLES OF SURFACE CONDENSERS.

Terminal Pressure in Lbs. per Square Inch.	Indicated Horse-Power.	Revolutions per Minute.	Volume of Low-Pressure Cylinder in Cubic Feet.	Capacity of Double-Acting Circulating Pump in Cubic Feet.	Condensing Surface in Square Feet.	$\frac{\text{Condensing Surface}}{\text{I.H.P.}}$.	Boiler Heating Surface in Square Feet.	$\frac{\text{Condensing Surface}}{\text{Capacity of L.P. Cylinder} \times \text{Terminal Pressure.}}$	$\frac{\text{Condensing Surface}}{\text{Heating Surface}}$.
10	517	83	36·37	·85	1,024	1·95	1,793	3·24	·553

LECTURE X.—A.M.INST.C.E. QUESTIONS.

1. Explain the terms "heat expended," "heat rejected," and state the relation which exists between these quantities and the work done by a heat engine. In a stationary condensing engine the condensation is effected by the injection of cold water into the condenser. The net quantity injected is 10 cubic feet per I.H.P. per hour, and the rise of temperature on entering the condenser is 30° F. Find what fraction of the whole heat expended (neglecting radiation and leakage) is usefully employed. *Ans.* ·12.

Lecture X.—Questions.

1. What quantity of water is required to obtain one cubic foot of steam at 212° F.? What quantity of heat exists in such steam without being sensible to the thermometer? How much water at 60° F. should you allow for the condensation of each cubic foot of steam at 212° F. during the working of an engine, hot-well 100° F.? *Ans.* 1·05 cb. in.; 36·7 units of heat; 1·02 lb.

2. The temperature of the hot well is maintained at 38° C., the temp. of the condensing water being 10° C. Find the amount of water for condensation per lb. of steam at atmospheric pressure. *Ans.* 21·4 lbs.

3. State the essential differences between jet and surface condensation of steam. Deduce a formula for determining the weight of condensing water required in a surface condenser, in order to condense steam at a given temperature into water at a given temperature. The vacuum gauge of a surface condenser indicates 22 inches while the mercurial barometer stands at 30 inches. The temperature of hot well = 110° F. The condensing water enters at 60° F. and is discharged at 90° F. The weight of steam passing through the condenser per minute = 80 lbs. Find weight of condensing water required per hour. *Ans.* 168,000 lbs. = 75 tons.

4. Suppose that in a jet and in a surface condenser the temperature of the exhaust steam is the same (say 150° F.), also the temperature of the hot-well water (say 120° F.), and the condensing water (say 60° F.). If the circulating water in the latter only rises 30° F., what are the relative amounts of water required per lb. of steam? *Ans.* 17·3 lbs. and 34·6, or as 1 to 2.

5. In a surface condenser the tubes are $\frac{3}{4}$ inch outside diameter, 6 feet long, and ·05 inch thick. How many such tubes will be required, and what will be the total cooling surface in square feet supposing the terminal pressure of exhaust to be 6 lbs., and the I.H.P. 1,000? Again, suppose the engine to require $\frac{1}{2}$ lb. of steam per I.H.P. per minute, and the conditions as to temperatures to be the same as in the last question, how many pounds or cubic feet of circulating water will have to pass through the condenser per minute? *Ans.* 1,273 tubes, 1,500 sq. ft., 17,320 lbs., 277 cub. ft.

6. In an engine trial the hot well discharge per minute was 29·7 lbs., the initial and final temperatures of the circulating water were 43·6° F. and 96·7° F. respectively, the temperature of the condenser steam was 123·7° F. and the temperature of the hot well was 113° F. Assuming the condenser steam to be just dry, find the number of lbs. of circulating water per minute. *Ans.* 560 lbs.

LECTURE XI.

CONTENTS.—Work Done during the Conversion of Water into Dry Steam—Definitions of Internal and External Work—Efficiency of Steam—Efficiency of High Pressure Steam—General Expressions for External and Internal Work during Evaporation—Example I.—Heat Rejected to Condenser—Example II.—Partial Evaporation—Example III.—Generation of Steam in a Closed Vessel—Factor of Evaporation—Examples IV. and V.—Steam Calorimeter or Dryness Fraction Indicator—Examples VI. and VII.—Questions.

Work Done during the Conversion of Water into Dry Steam.—We can now give a more definite account of the distribution of heat expended during the conversion of water into steam, and thus prepare the way for a more thorough understanding of the economical use of steam in a steam engine.

An ordinary steam engine consists essentially of—

1. A *boiler* wherein the steam at a given pressure is generated from water at a given temperature.

2. A *cylinder* containing a movable, steam-tight piston, of which the steam acts and does useful work.

3. Frequently, another part, called the *condenser*, is added. The function of the condenser is exactly the opposite of that of the boiler. For in it, the steam is converted back again into water after passing through the working cylinder. Engines having only the first two essential parts are called *non-condensing*, whilst those consisting of the three parts are called *condensing* engines. These three organs are usually quite distinct and separate from each other, the connections being made by pipes, valves, etc. For our present purposes it will be best to leave out of account all connections such as pipes and valves. We shall therefore suppose the boiler, working cylinder and condenser to be one and the same vessel. Also, we shall neglect all losses of heat, such as that due to radiation, conduction, etc. Further, we shall, in the meantime, consider the case of 1 lb. of water at an initial temperature of 32° F., raised into *dry* steam at 212° F. The pressure of the steam is, therefore, that due to atmospheric pressure—viz., about 14·7 lbs. per square inch.

Take a tall cylindrical vessel fitted with a weightless and perfectly frictionless piston, and place between the piston and the bottom of the vessel 1 lb. of water at 32° F. The cylinder being open at the top the pressure on the piston will be constantly that due to the atmosphere. For convenience, suppose the cross

sectional are of the area of the cylinder to be *one square foot* (or 144 square inches). Then

$$\textit{Total pressure on piston} = P = 144 \times 14{\cdot}7 = 2117 \text{ lbs.}$$

Since 62·5 lbs. of fresh water occupy a volume of 1 cubic foot,

$$\therefore \quad 1 \text{ lb.} \quad ,, \quad ,, \quad \text{occupies} \quad ,, \quad \frac{1}{62{\cdot}5} = {\cdot}016 \text{ cub. ft.}$$

The cross area of the cylinder being 1 square foot, it follows that the under surface of the piston will be ·016 foot above the base of the vessel.

By applying heat to the bottom of the vessel the temperature of the water will be ultimately raised to 212° F. The heat expended in this operation is (212 — 32) = 180 B.T.U. Now, the volume of the 1 lb. of water at the end of this operation is slightly greater than ·016 cubic foot, as shown by the graphic figure on p. 108. The piston has, therefore, been raised by a small amount, and consequently work has been done in overcoming the atmospheric resistance. We thus see that rather *less* than 180 B.T.U. are employed in increasing the molecular kinetic energy of the water. This increase in the volume of the water between 32° F. and 212° F. is so small (being only approximately ·016 × ·043 = ·000688 cubic foot that it may safely be neglected. The piston, therefore, remains stationary between those two temperatures.

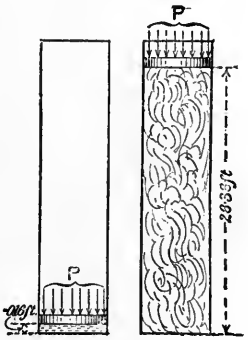

ILLUSTRATING EXTERNAL WORK DONE DURING EVAPORATION OF 1 LB. OF WATER FROM AND AT 212° F.

Continuing the application of heat to the water at 212° F., the same becomes evaporated and the piston rises rapidly, whilst the temperature remains constant. Suppose the source of heat to be withdrawn just when the last particle of the 1 lb. of water has been converted into dry steam. Then we know that 966·6 B.T.U. have been spent in bringing about this change. The piston will now be at a considerable height above the base of the vessel, and, consequently, a certain fraction of the *latent* heat will have been employed in doing work against atmospheric pressure. Referring to column V_s of the "Table of the Properties of Saturated Steam," Lecture VII., we notice that 1 lb. of *dry* steam at atmospheric pressure (temperature 212° F.) occupies a volume of

26·36 cubic feet. Hence the piston will now stand at a height of 26·36 feet above the base of the vessel. The vertical displacement of the piston is, therefore, 26·36 — ·016 = 26·35 feet approximately.

$\therefore$ *Work done in raising piston* = 2,117 × 26·35 ft.-lbs.
„ „ „ = 55,780 „
Or, expressed in heat units „ $= \frac{55,780}{778} = 71{\cdot}7$ B.T.U.

Thus, of the 966·6 B.T.U. of *latent* heat, 71·7 B.T.U. are employed in doing mechanical work *external* to the substance (water) which is undergoing a change of state; while the remainder (894·9 B.T.U.) is spent in bringing about *internal* changes.

DEFINITION.—*The energy spent in bringing about internal or molecular changes in a substance is called* **Internal Work,** *and that spent on bodies external to the substance is called* **External Work.**

The student must carefully distinguish between *internal* and *external* work. The former represents energy *in* the substance itself, whether in the form of molecular kinetic energy or that due to change of state; the latter represents energy which has *passed out of* the substance to external bodies.

The distribution of heat in converting 1 lb. of water at 32° F. into dry steam at 212° F., may be briefly stated thus—

1. *Raising temp. of water from* 32° *F. to* 212° *F.* = 180·0 B.T.U.
2. *Internal work during evaporation* . . = 894·9 „
3. *External work during evaporation* . . = 71·7 „

Total Heat Expended, . = **1146·6 B.T.U.**

These numbers are in the proportion—180 : 894·9 : 71·7 Or, dividing by the smallest number, 71·7, the proportion is 2·5 : 12·38 : 1. We shall make use of the terms of this proportion in setting out the diagrams of work in the case under consideration.

The student knows from his study of mechanics that mechanical work can be completely represented by an area or "*diagram of work.*" When the effort or pressure is constant throughout the displacement (as in the case of the rising piston just referred to), the *diagram of work* is a rectangle, whose height represents the constant pressure, and base the given displacement. If the pressure varies during the displacement (as in the case of steam or gas expanding behind the working piston of an engine), the

diagram of work will not be a rectangle, but a figure bounded by straight and curved lines. In this case, the *mean height* of the figure is a measure of the *mean pressure* exerted during the total displacement, and the length of the figure as before represents the total displacement.

Now, heat and work being mutually convertible, it follows that quantities of heat may just as conveniently be represented by areas as quantities of mechanical work. These quantities, however, differ in this respect. In the former there is nothing corresponding to the two factors, effort or pressure and displacement, as in the case of the latter. Hence the diagram for a quantity of heat may be any shape we please, so long as it contains as many units of area as there are units of heat to be represented. It is, however, convenient for our present purposes to represent quantities of heat by rectangular areas, and if we first draw an ordinary diagram for the *external* work done during evaporation, we may then construct the *internal* work diagrams on the same base, the heights of which need only be drawn in the proportions stated above. This should be clearly understood from what follows.

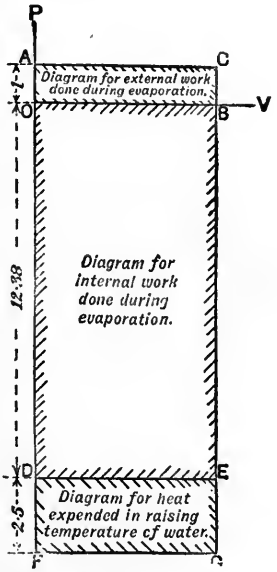

DIAGRAM SHOWING INTERNAL AND EXTERNAL WORK DONE IN CONVERTING WATER AT 32° F. INTO DRY STEAM AT 212° F.

We have seen that the expression for the external work is the product of the two factors—viz., *pressure* = 2,117 lbs., and *displacement* = 26·35 feet.

Or, *External work* = 2,117 × 26·35
= 55,780 ft.-lbs.

Draw two lines O P, O V at right angles to each other. Along O P set off O A, to any convenient scale, to represent the pressure of 2,117 lbs.; and along O V set off O B, to any convenient scale, to represent the displacement of 26·35 feet. Complete the rectangle O A C B. Then O A C B is the diagram representing the *external work* done during the evaporation of 1 lb. of water from and at 212° F. For its area is equal to O A × O B, which

is thus proportional to $2,117 \times 26{\cdot}35$, or 55,780, the number expressing the ft.-lbs. of external work done.

Now, we have seen that the *internal* work done during evaporation is 12·38 times the external work. Therefore, produce P O downwards, and cut off a part $O D = 12{\cdot}38 \times O A$, and complete the rectangle O B E D. Then the area, O B E D, represents to the same scale as in the previous case, the *internal* work done during the evaporation of the water.

Similarly, on O D produced, cut off $D F = 2{\cdot}5 \times O A$, and complete the rectangle D E G F. Then the area, D E G F, represents the work done in raising the temperature of the water from 32° F. to 212° F.

Efficiency of Steam.—By returning the whole of the steam to its initial conditions—viz., water at 32° F., with the piston ·016 feet above the base of the cylinder, and repeating the above cycle of operations (heating, evaporating, condensing and cooling) over and over again, the piston will have a vertical reciprocating motion corresponding to that of an ordinary steam-engine. The *maximum external work* done during each cycle will be represented by the small rectangular area O A C B, while the total heat expended will be represented by the much larger area, A C G F. From this we can deduce the expression for the efficiency of a non-expansive engine using steam at atmospheric pressure from feed water at 32° F. Thus—

$$\text{Efficiency} = \frac{\text{Heat converted into useful work}}{\text{Total heat expended}}.$$

$$\text{,,} = \frac{71{\cdot}7}{1146{\cdot}6} = {\cdot}0625, \text{ or } 6{\cdot}25 \text{ per cent.}$$

Hence, under circumstances more favourable than any occurring in practice, we see what a small percentage of the total heat expended can be usefully employed in the engine.

The efficiency just found is usually called the **Steam Efficiency,** to distinguish it from the efficiencies of the boiler and the mechanism of the engine. The *product* of the efficiencies of the boiler and the engine constitutes the efficiency of the whole combination.

By using feed water at a higher temperature than 32° F., the total heat expended per 1 lb. of water evaporated would be less than that found above, and, consequently, the steam efficiency would be slightly higher. Thus, in jet-condensing engines, the feed water has a temperature corresponding to that of the hot well; which, in the average, is about 110° F. Hence, taking

steam at atmospheric pressure (as before) raised from feed water at 110° F., we may calculate the steam efficiency as follows :—

Total heat expended = *Increase of Sensible heat* + *Latent heat.*
,, ,, = (212 − 110) + 966·6 = 1,068·6 B.T.U.
External work done = 71·7 B.T.U. (same as before).

$$\therefore \text{ Steam Efficiency} = \frac{71{\cdot}7}{1068{\cdot}6} = {\cdot}0671, \text{ or } 6{\cdot}71 \text{ per cent.}$$

This gives an increase of ·46 per cent. over the first case.

Efficiency of High-Pressure Steam.—Suppose we load the piston of the tall cylindrical vessel to such an extent that the pressure produced on the surface of the 1 lb. of water is, say, 100 lbs. per square inch absolute. From what has been already said, we know that steam will not begin to be formed (*i.e.*, the water will not boil) until the temperature is considerably higher than 212° F. The exact temperature at which evaporation commences can be found from the Table in Lecture VII. Referring to this Table we see in columns 1 and 2 that the boiling point of water subjected to a pressure of 100 lbs. per square inch is 327·58° F., say, 328° F. To make the problem before us more practical, suppose the temperature of the 1 lb. of water to be 110° F.

Applying heat to the bottom of the vessel the temperature of the water rises to 328° F., at which point it remains fixed until evaporation is complete. During evaporation the piston ascends as before, but not to the same height. Referring again to Table II., Lecture VII., we notice, in column V_s, that the volume of 1 lb. of dry steam at a pressure of 100 lbs. per square inch is 4·403 cubic feet. Hence, after complete evaporation, the piston will be at a height of 4·403 feet above the base of the vessel. The total pressure on the piston is P = 144 × 100 lbs.

$$\therefore \text{ External work, during evaporation per lb. of water, } H_E \begin{cases} = P \times V_E = P(V_S - V_w) \\ = (144 \times 100) \times (4{\cdot}403 - {\cdot}016) \text{ ft.-lbs} \\ = 63{,}170 \text{ ft.-lbs.} \end{cases}$$

$$\text{Or, } \quad H_E = \frac{63{,}170}{778} = 81{\cdot}2 \text{ B.T.U.}$$

Total heat expended = *Increase of Sensible heat* + *Latent heat.*
Increase of Sensible heat = 328 − 100 = 218 B.T.U.
Latent heat of steam at 328° F. = 966 − ·7 (328 − 212) = 884 B.T.U.
$\therefore$ Total heat expended = 218 + 884 = 1,102 B.T.U.

$$\therefore \text{ Steam efficiency} = \frac{81{\cdot}2}{1{,}102} = {\cdot}0736, \text{ or } 7{\cdot}36 \text{ per cent.}$$

Comparing these results with the corresponding ones for steam at atmospheric pressure, we notice that the external work in this case is only 9·5 B.T.U. more than in the former case. This corresponds to an increase of about 13·2 per cent. The increase in the steam efficiency, however, is but 7·36 — 6·71, or ·65 per cent.

The student may, therefore, naturally ask, wherein lies the advantage of using high-pressure steam? In answer to this question, we should first of all remind him that the engine under consideration is a *non-expansive* one. That is, the steam acts on the piston with its full pressure throughout the whole stroke. Consequently, high-pressure steam would not be adopted except as a means of increasing the power of such an engine without increasing its size. For, the use of high pressure necessitates the employment of stronger boilers and cylinders, as well as greater accuracy in construction. It is only where steam is used expansively that high pressures can be economically and efficiently adopted.

In drawing the above comparison between the performances of the two engines (the one using low-pressure and the other high-pressure steam) we have taken equal *weights* of steam. The results of the comparison would, however, be very different if we had taken equal *volumes*. Thus, it is quite clear that steam at 100 lbs. pressure, when used non-expansively in a cylinder of given volume, would perform $\frac{100}{15} = 6{\cdot}6$ times more work than steam at atmospheric pressure under like circumstances in the same cylinder. But, then, the *weights* of steam used in the two cases would be very nearly in the proportion 6·6 : 1, and the fuel consumed would be in the same proportion. Now, the object of the engineer is to obtain the greatest amount of work for the least possible consumption of fuel, and, consequently, the comparison between the performances of two engines should be made with respect to the weights of steam used for a given amount of work performed. Nevertheless, it is sometimes necessary to know the work done per cubic foot of steam used. This may be obtained by dividing the work done per lb. of steam by the volume of 1 lb. of steam at the given pressure. Thus—

$$\left.\begin{array}{r}\textit{Work done per cub. ft. of}\\ \textit{steam at atmos. pressure}\end{array}\right\} = \frac{\textit{External work during evaporation}}{\textit{Volume of 1 lb. of steam}}.$$

$$\text{,,} \qquad \text{,,} \qquad = \frac{55{,}780}{26{\cdot}36} = 2{,}116 \text{ ft.-lbs.}$$

General Expressions for External and Internal Work during Evaporation.—We shall now express the preceding results in general terms—

Let t_1 = Temperature of steam.
,, t_2 = Temperature of feed water.
,, L = Latent heat at temperature t_1.
,, p = Pressure of steam in lbs. per square inch.
,, V_s = Volume in cub. ft. of 1 lb. of *dry* steam at pressure p.*
,, V_w = ,, ,, ,, water = ·016 cub. ft.

Supposing the steam to be *dry*, then, we have—

1. **Total heat expended** = *Increase of Sensible heat + Latent heat.* (*See* LECTURE IX.)
,, ,, $= (t_1 - t_2) + L,$
,, ,, $= (t_1 - t_2) + 966 - \cdot 7\,(t_1 - 212)$ B.T.U.
,, ,, $= 1{,}115 + \cdot 3\,t_1 - t_2$ B.T.U.†

2. **External work done during evaporation** = *Pressure per sq. ft.* × *Increase of volume during evaporation.*
,, ,, $= 144\,p\,(V_s - V_w($ ft.-lbs.
Or ,, ,, $= \dfrac{144\,p\,(V_s - V_w)}{778}$ B.T.U.

3. **Internal work done during evaporation** = *Latent heat — External work.*
,, ,, $= 966 - \cdot 7(t_1 - 212) - \dfrac{144p(V_s - V_w)}{778}$ B.T.U.

The value of V_w in the expression for external work, is so small compared with that of V_s for all ordinary pressures, that we may safely neglect it in most calculations.

EXAMPLE I.—How many ft.-lbs. of work are done in converting 1 lb. of water from a temperature of 100° F. into dry steam at 281° F. (corresponding to an absolute pressure of 50 lbs. per square inch)? The volume of 1 lb. of dry steam at that temperature and pressure being 8·41 cubic feet; find external and internal work done during formation of steam, and weight of steam used per hour per horse-power.

* The volume of 1 lb. of dry steam at a given pressure is sometimes called the *Specific Volume* of steam at that pressure. We find, however, that students often make the mistake of confounding the term *Specific Volume* with that of "Relative Volume of Equal Weights of Steam and Water," and, therefore, we prefer not to use the former term.

† Instead of remembering this final result, students should deduce it, when required, from definitions as stated in italics above.

ANSWER.—Here, $t_1 = 281°$ F., $t_2 = 100°$ F., $p = 50$ lbs. per square inch, $V_s = 8{\cdot}41$ cubic feet.

1. *Total heat expended* = *Increase of sensible heat* + *Latent heat.*
   Increase of sensible heat = 281 − 100 = 181 B.T.U.
   Latent heat = 966 − ·7 (281 − 212) = 918 B.T.U.
   Total heat expended = 181 + 918 = **1,099 B.T.U.**
   ,, ,, = 1,099 × 778 = **855,000 ft.-lbs.**
2. **External work done during evaporation** = $144\ p\ V_s$.
   ,, ,, = 144 × 50 × 8·41 = **60,550 ft.-lbs.**
3. **Internal work done during evaporation** = { *Latent heat of evaporation — External work.*
   ,, ,, = 918 × 778 − 60,550 ft.-lbs.
   ,, ,, = **653,500 ft.-lbs.**

4. Let x = Weight of steam used per hour per horse-power,
   External work done per 1 lb. of steam formed = 60,550 ft.-lbs.
   ∴ ,, ,, x lbs. ,, ,, = $60{,}550\,x$ ft.-lbs
   Now, 1 horse-power corresponds to 33,000 × 60 = 1,980,000 ft.-lbs. per hour

∴ By the conditions of the question—

$$60{,}500\,x = 1{,}980{,}000$$

Or,
$$x = \frac{1{,}980{,}000}{60{,}550} = 32{\cdot}7 \text{ lbs.}$$

Heat Rejected to Condenser.—In the preceding examples it has been tacitly assumed that during the return motion of the piston within the cylinder, the condensation of the steam was effected under *zero* pressure—*i.e.*, condensation was so perfect that no *back pressure* was felt on the under surface of the piston. The piston, therefore, returned unloaded. The whole of the external work done during the upward motion of the piston was, therefore available for useful purposes. Had the condensation been incomplete, part of the work would have been employed in returning the piston against the back pressure due to the imperfect vacuum. Such perfect conditions as we have hitherto assumed cannot be attained in practice. Condensation is always more or less imperfect, and consequently we find that the back pressure *varies* from 2 to 5 lbs. per square inch in condensing engines, to 15 or 18 per square inch in non-condensing engines. A perfect vacuum cannot be attained in practice; for, water at all temperatures gives off vapour which naturally exerts a certain pressure. Thus, at a temperature of about 80° F. water vapour

exerts a pressure of about ·5 lb. per square inch, and at a temperature of 102° F. the vapour pressure is 1 lb. per square inch.

The subject presently before us is to determine the amount of heat rejected to the condensing water per lb. of steam passing through the engine. This, as may be inferred from the above remarks, depends upon the conditions under which condensation takes place. Consideration of the following three cases will give the student a clear idea of the distribution of heat in an ordinary steam engine :—

FIRST CASE.—*Suppose condensation to take place under the same pressure as the evaporation.*

Let p = Pressure of steam in lbs. per square inch absolute.
„ V_s = Volume of 1 lb. of dry steam at pressure p.
„ Q = Total heat expended per lb. from feed-water temperature to steam at pressure p.
„ R = Rejected heat to condenser.

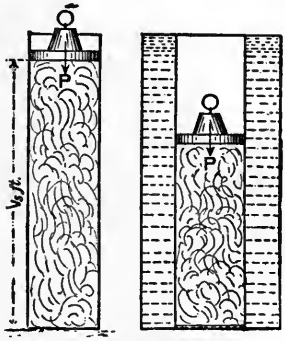

EXTERNAL WORK DONE DURING CONDENSATION OF STEAM UNDER THE SAME PRESSURE AS THE EVAPORATION TOOK PLACE.

As before, let the 1 lb. of water be heated under the movable piston of a tall cylindrical vessel whose cross-sectional area is 1 square foot. For our present purposes, however, it is best to neglect the atmospheric pressure on the upper surface of the piston, and to suppose the necessary pressure to be caused by a weight placed on the piston. The magnitude of this weight will be, $P = 144\,p$ lbs

After the water is completely evaporated, the piston will be at a height of V_s feet above the base of the vessel, and—

The external work done during evaporation = $P\,V_s$ ft.-lbs.

„ „ „ „ = $\frac{P\,V_s}{778}$ B.T.U.

Suppose we now convert the tall cylinder into a condenser by surrounding it with cold water. The weight P, still remaining on the piston, condensation will take place under the same conditions that evaporation took place—viz., under a pressure of p lbs. per square inch. Let the final temperature of the condensed steam be the same as the initial temperature of the water. Then,

during condensation, the heat rejected to the condensing water is clearly equal to the total heat expended, or Q units. For the heat rejected is derived from the following sources :—

1. That heat which is derived from the work done by the descending piston. Neglecting the very small volume V_w of 1 lb. of water, we see that the work thus converted into heat is $\frac{P.V_s}{778}$ B.T.U., which passes through the steam into the condensing water.

2. The heat formerly spent on *internal work* during evaporation is now yielded up to the condensing water.

3. The *sensible heat* given out during the cooling of the water to its initial temperature.

Hence, in a cycle of operations of this kind, no *available* external work is done. The external work done during the ascent of the piston is undone, or has to be restored during its descent, thus leaving no work available for useful purposes.

The results of this case may be stated thus :—

Heat Rejected to Condenser = Total Heat Expended.

Or, $$R = Q.$$

Second Case—*Suppose condensation to take place under zero pressure.*

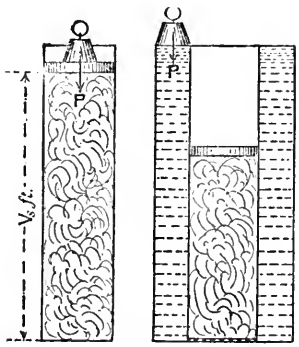

Condensation of Steam at Zero Pressure.

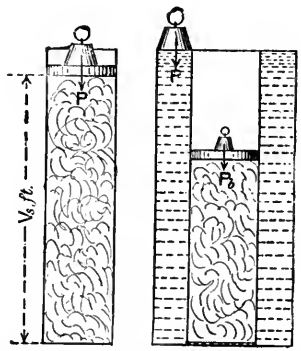

Condensation of Steam under a Back Pressure of p_b lbs. per square inch.

This corresponds to those cases previously considered, and also to the case of an engine whose condenser gives a perfect vacuum, or no back pressure.

To understand this case, suppose at the instant the condenser is applied to the cylinder full of dry steam that the weight P is

lifted off the piston. Then, clearly, no *external work* will be done by the descending piston during the condensation of the steam. Hence, in this case—

Heat rejected to condenser = Total heat expended — external work.

Or, $$R = Q - \frac{P V_s}{778}.$$

THIRD CASE.—*Suppose condensation to take place under a pressure of p_b lbs. per square inch absolute.*

This corresponds to those cases occurring in practice, where p_b is the *back pressure* on the piston due to the pressure of the vapour in the condenser.

At the instant when condensation is about to take place, imagine the weight P to be lifted off the piston and another but smaller weight ($P_b = 144\, p_b$ lbs.) to be put in its place. Then, during condensation, the piston descends under the load P_b lbs., and the work done during the descent is converted into heat, which passes away to the condensing water. The heat rejected to the condenser is, therefore, greater in this than in the former case by the amount $P_b V_s$ ft.-lbs., or $\frac{P_b V_s}{778}$ B.T.U.

$$\therefore \quad R = Q - \frac{P V_s}{778} + \frac{P_b V_s}{778} \text{ B.T.U.}$$

i.e., $$R = Q - \frac{(P - P_b) V_s}{778} \text{ B.T.U.}$$

Or, since $P = 144\, p$, and $P_b = 144\, p_b$,

$$R = Q - \frac{144}{778}(p - p_b) V_s \text{ B.T.U.}$$

The foregoing results could have been obtained at once from the *Principle of the Conservation of Energy*, thus—

$$\text{Total heat expended} = \begin{cases} \text{Heat converted into useful work} \\ \quad + \text{heat rejected to condenser.} \end{cases}$$

But, *Total heat expended* = Q units.

Heat converted into useful work $= \frac{(P - P_b)V_s}{778} = \frac{144}{778}(p - p_b)V_s$ *units.*

Heat rejected to condenser = R units.

$$\therefore \quad Q = \frac{144}{778}(p - p_b) V_s + R \text{ (heat units).}$$

As already explained, the back pressure in condensing engines varies from 2 lbs. to 5 lbs. per square inch. In non-condensing engines the steam, after performing work in the cylinder, exhausts

into the atmosphere, and the back pressure can, therefore, never be less than the atmospheric pressure, in fact it varies from 15 to 18 lbs. per square inch. In this case the atmosphere is the condenser, but the whole of the heat rejected to it is lost. The advantages of a good condenser are thus apparent. For, in addition to the reduction of the back pressure, part of the heat rejected to it is employed in raising the temperature of the feed water.

EXAMPLE II.—A non-expansive condensing steam engine is supplied with steam at a pressure of 45 lbs. per square inch by gauge. The vacuum gauge indicates a pressure of 2 lbs. per square inch in the condenser. Find (1) the amount of heat rejected to the condenser per lb. of steam used; (2) the steam efficiency; and (3) the weight of water used per hour per effective horse-power. Let the temperature of feed water = 100° F.

ANSWER. — The *absolute* pressure of the above steam is 45 + 15 = 60 lbs. per square inch. Referring to Table II., Lecture VII., we find the temperature of steam at 60 lbs. absolute to be 292·51° F., say, 293° F.; and the volume of 1 lb. of dry steam at the same pressure is $V_s = 7$ cubic feet.

$\therefore$ *Total heat expended per lb. of steam* = *Increase of Sensible heat + Latent heat.*

Or, $Q = (293-100)+966-\cdot7(293-212)$ B.T.U

$= 1{,}102$ B.T.U. (very nearly).

Heat converted into useful work per lb. of steam $= \frac{144}{778}(p - p_b)\,V_s$.

" " $= \frac{144}{778}(60 - 2) \times 7 = 75\cdot1$ B.T.U.

Now, $Q = \frac{144}{778}(p - p_b)\,V_s + R$,

$\therefore$ $R = 1{,}102 - 75\cdot1 = \mathbf{1{,}027\ B.T.U.}$

Steam Efficiency $= \frac{75\cdot1}{1{,}102} = \mathbf{\cdot0681}$, **or 6·81 per cent.**

Let x = weight of water used per hour per effective H.P. Then,

Useful work done per x lbs. of water used $= 144\,(p - p_b)\,V_s \times x$ ft.-lbs.

" " $= 144\,(60 - 2) \times 7 \times x = 58{,}460\,x$ ft.-lbs.

But, 1 *Horse-power* $= 33{,}000 \times 60 = 1{,}980{,}000$ ft.-lbs. per hour.

$\therefore$ $58{,}460\,x = 1{,}980{,}000$.

$\therefore$ $x = \frac{1{,}980{,}000}{58{,}460} = \mathbf{33\cdot8\ lbs.}$

Partial Evaporation.—Up till now, our calculations, etc., have been based on the assumption that the steam when formed contained no suspended moisture. In other words, the steam was assumed to be perfectly *dry*. The steam supplied to an engine from an ordinary boiler is seldom in this condition, for it is always more or less saturated with watery particles. Even if the steam be dry on leaving the boiler, it may enter the working cylinder in a very moist condition, due to loss of heat from various causes in its passage from the former to the latter. Again, large quantities of water sometimes pass along with the steam from the boiler to the cylinder, and go through the engine without yielding full return for the heat spent in raising its temperature to that of the accompanying steam. Such large quantities of water are called *priming*, in distinction to the smaller quantities which are mingled with the steam in the form of a fine spray and which we have termed *suspended moisture*. Priming is generally the result of either too small a steam space in the boiler or too rapid ebullition, or impurities in the water, or a combination of these defects. It may cause a great deal of trouble to the engineer in charge, and when excessive, it may result in a fractured cylinder-cover or necessitate the stoppage of the engine.

At present we are, however, not concerned with the effects of priming, and shall consequently confine our remarks to cases of partial evaporation in which the steam contains moisture held in suspension.

Take the case of 1 lb. of water at 212° F. converted into *wet* steam at the same temperature. Suppose the steam contains 10 per cent. of suspended moisture. Then only 90 per cent., or ·9 lb. of the water will be in the form of *dry* steam. Hence, instead of spending the 966·6 B.T.U. of latent heat, we only require $·9 \times 966·6 = 869·9$ B.T.U. to bring about this result. The fraction, ·9, is called the *dryness fraction* of the steam. If the 1 lb. of water had had an initial temperature less than 212° F., say, 100° F., then, the total heat expended would have been $(212 - 100) + ·9 \times 966·6 = 981·9$ B.T.U. Generally—

Let Q = Total heat expended per lb. of *wet* steam at temperature t_1° from water at temperature t_2°.

„ L = Latent heat per lb. of *dry* steam.

„ x = Dryness fraction, or *dry* steam in 1 lb. of wet steam.

Then, Q = *Increase of sensible heat + latent heat.*

But, *Increase of sensible heat* $= t_1 - t_2$ *heat units,*

And, *Latent heat per lb. of wet steam formed* $= x\,L$ *heat units.*

Therefore, $Q = (t_1 - t_2) + x\,L$ heat units.

We have now to show how the *external work* done during the formation of *wet* steam is found.

Let V_s = Volume of 1 lb. of *dry* steam at pressure p lbs. per sq. in.
,, V_{ws} = Volume of 1 lb. of *wet* steam at same pressure.
,, V_w = Volume of 1 lb. of water = ·016 cub. ft.
,, x = Dryness fraction (as before).

Then, V_{ws} = (*vol. of dry steam* + *vol. of water*) in 1 lb. of the mixture,
,, $= x\,V_s + (V_w - x\,V_w)$,

Or, $V_{ws} = V_s + (1 - x)\,V_w$
,, $= x\,(V_s - V_w) + V_w$

Supposing, then, the piston of the cylinder to be one square foot in area, we get—

Displacement of piston $= V_{ws} - V_w$ ft.

∴ External work per lb. of wet steam formed $= 144\,p\,(V_{ws} - V_w)$
,, ,, $= 144\,p\,x\,(V_s - V_w)$ work units.

Unless for very high perssures, V_w is very small compared with V_s and V_{ws}, and may, therefore, be neglected in the above formulæ.

EXAMPLE III. — A boiler supplies steam at a pressure of 90 lbs. absolute, which contains 10 per cent. of suspended moisture. The temperature of the feed water is 100° F. Find (1) volume per lb. of wet steam thus formed; (2) the external and internal work during evaporation; and (3) the total heat expended per lb. of steam used.

ANSWER.—Here, p = 90 lbs. abs., and temperature, corresponding to this pressure is

$$t_1 = 320°\text{ F.};\quad t_2 = 100°\text{ F.};\quad x = \frac{100 - 10}{100}.$$

Volume of 1 lb. of *dry* steam at pressure p is V_s = 4·86 cub. ft.

From above formulæ, we get—

1. Volume of 1 lb. of wet steam $= V_{ws} = x\,(V_s - V_w) + V_w$
$= ·9\,(4·86 - ·016) + ·016 =$ **4·37 cub. ft.**

2. External work done per lb. of wet steam $= 144\,p\,(V_{ws} - V_w)$
$= 144 \times 90\,(4·37 - ·016)$ ft.-lbs
$=$ **56,500 ft.-lbs.**

Or,

External work done per lb. of wet steam $= \frac{56{,}500}{778} = 76{\cdot}2$ **B.T.U.** *approximately.*

3. Internal work done during evaporation = *Latent heat per lb. of wet steam — external work.*

„ „ $= x\,\mathrm{L} - \frac{144\,p\,(\mathrm{V}_{ws} - \mathrm{V}_w)}{778}$ heat units.

„ „ $= {\cdot}9 \times \{966 - {\cdot}7\,(320 - 212)\} - 72{\cdot}6$ **B.T.U.**

„ „ $= 801{\cdot}4 - 72{\cdot}6 = 729$ **B.T.U.**

4. Total heat expended per lb. of wet steam formed = *Increase of sensible heat + latent heat.*

„ „ $= (t_1 - t_2) + x\,\mathrm{L}$.

„ „ $= (320 - 100) + 801{\cdot}4$

„ „ $= 1{,}021$ **B.T.U.** *approximately.*

Generation of Steam in a Closed Vessel.—Having thus considered the whole process of the generation of steam under constant pressure, we shall now explain, briefly, the differences between those cases and the generation of steam in a closed vessel. This will be of interest to the student since it corresponds to the case of getting up steam in a boiler.

Suppose that we have 1 lb. of water at a given temperature enclosed in a vessel of large capacity. Suppose, further, that the only pressure on the surface of the water is that due to the pressure of its own vapour.

By applying heat to the bottom of the vessel, the temperature of the water rises as before, steam is generated, and its pressure increases with its temperature. In previous cases, where the water was heated and evaporated under a loaded piston, no evaporation took place until the natural pressure within the mass of water was sufficiently great to overcome the superincumbent pressure. In the present case, however, the surrounding pressure is always in equilibrium with the pressure within the mass of water, and, consequently, evaporation goes on uninterrupted.

Suppose the capacity of the vessel to be 26·36 cubic feet (the volume occupied by 1 lb. of dry steam at atmospheric pressure). Then, when the temperature of the mass has risen to 212° F., the whole of the water will be converted into *dry* steam, and its pressure will be 14·7 lbs. per square inch absolute. Further application of heat causes superheating of the steam. Similarly, if the vessel had a capacity of 7 cubic feet (the volume occupied

by 1 lb. of dry steam at a pressure of 60 lbs. per square inch absolute), then complete evaporation would not occur until the temperature was 293° F., and the pressure of the 1 lb. of dry steam thus formed would be 60 lbs. per square inch absolute.

In getting up steam in an ordinary boiler, the pressure on the surface of the water at the commencement is usually equal to that of the atmosphere. On applying heat the temperature will rise, evaporation, or generation of steam, will not commence at once, but will be delayed until the temperature has risen to 212° F. after which the evaporation will proceed as described above.

We have seen that during evaporation under constant pressure, a fraction of the total heat expended is transformed into external work. But, by the nature of the present case, no such external work can be done, and this constitutes the essential difference between the two modes of forming steam. Now, it is quite impossible to conceive of any difference in the internal energy of 1 lb. of dry steam formed according to either method, so long as the pressures are equal. Hence we conclude, *that the total heat expended in evaporating water in a closed vessel is less, by the amount due to external work, than that spent in producing the same final result by evaporating under a constant pressure.*

It is true that during evaporation of the water in the closed vessel, work is being continually spent in compressing the steam already formed; this work, however, is done *within* the mass itself, and is but part of the *internal work*

Equivalent Evaporation from and at 212° F. and Factors of Evaporation.—In comparing the evaporative results of different boilers, it is still a common practice to measure and to state their efficiencies by the weights of their feed waters converted into steam per pound of fuel burned per hour in their furnaces. This rough-and-ready method is open to several objections:—

1. The fuel may not have the same calorific value in each case.
2. The stoking may be skilfully performed in one case and not in another.
3. The temperatures of the feed water may be different.
4. The pressures of the steam may be different in each case.
5. One boiler may be producing *dry saturated steam*, whilst another may be giving off more or less *wet steam* and a third *superheated steam.*

It is therefore necessary, in making such tests, to fix upon a *fairer standard of comparison*, and the one which has found most favour hitherto with engineers, is called the "*equivalent evaporation from and at 212° F.*" *per lb. of fuel consumed per hour.* And the *factor of evaporation* in this case is, the ratio of the weight of water which could be evaporated as dry steam from and at 212° F. to the weight of water which was actually heated up from the feed temperature to and evaporated at the pressure, temperature and dryness as steam in the boiler.

In Table II., symbol E, values are given for a special "Factor of Equivalent Evaporation at 212° F." for the various absolute pressures of

p lbs. per square inch, but these values are only applicable to a boiler feed water temperature of 212°, and simply mean that—

$$\left.\begin{array}{l}\text{The Factor of Equivalent Evaporation for Dry Saturated Steam in Table II.,}\end{array}\right\} \quad E = \frac{\text{Weight of water which could be evaporated from and at 212° F. under atmospheric pressure}}{\text{Weight of water actually heated from 212 F. to and evaporated at pressures } p \text{ or temp. } t_e^\circ}$$

Let us first of all consider the case of dry saturated steam, or what is only too often assumed to be steam in that condition.

Let E_f = Evaporation factor where feed water is at t_f°.

H = Total heat, as in Table II., from water at 32° F. to temperature of evaporation t_e°.

W_e = Weight of steam per hour per lb. of fuel, at pressure p and temperature of evaporation t_e°.

W_a = Weight of steam per hour for same B.T.U. as with W_e from and at 212° F.

Then, by the above definition of this *standard of comparison*,

$$\text{The Factor of Evaporation, } E_f = \frac{W_a}{W_e}.$$

But, every 1 lb. of water evaporated from and at 212° F. has only to receive the latent heat of steam, or 966 B.T.U.

And, every 1 lb. of water raised from the feed temperature t_f° to the temperature of evaporation t_e° corresponding to the pressure p receives $H - (t_f^\circ - 32^\circ)$ B.T.U.

Hence, $$W_a \times 966 = W_e [H - (t_f^\circ - 32^\circ)].$$

Or, $$E_f = \frac{W_a}{W_e} = \frac{H - (t_f^\circ - 32^\circ)}{966}.$$

And, this is what is meant by the "*Equivalent Evaporation from and at 212° F.*," as well as by the *Factor of Evaporation*.

EXAMPLE IV.—A boiler working at 100 lbs. absolute produces 10 lbs. of dry saturated steam per lb. of coal burned in its furnace, and when the temperature of the feed water is 100° F.; find the "equivalent evaporation from and at 212° F." and the "factor of evaporation." Referring to Table II. we see, that for p = 100 lbs., H = 1,181·9, and we are given t_f° = 100° F., and W_e = 10 lbs.

Hence, $$E_f = \frac{H - (t_f^\circ - 32^\circ)}{966} \qquad \text{and, } W_a = E_f \times W_e.$$

Or, $$E_f = \frac{1{,}181{\cdot}9 - (100 - 32)}{966};$$

$\therefore$ $$E_f = 1{\cdot}153; \qquad \text{and, } W_a = 1{\cdot}153 \times 10 = 11{\cdot}53 \text{ lbs.}$$

EXAMPLE V.—Suppose, that another boiler also working at 100 lbs. absolute produces 10 lbs. of *wet steam*, having 10 per cent. of moisture for every 1 lb. of coal burned, when the temperature of feed water is also 100° F., find its factor of evaporation and equivalent evaporation from and at 212° F.

Here, everything is the same as in the previous example except, that we have a dryness fraction, x = ·9, since 10 per cent. or $\frac{1}{10}$ of the steam is wet, as we saw before, when considering partial evaporation in this lecture.

Hence, H is not the total heat of evaporation from 32°, as found in Table II., but $H = S - (t_f^\circ - 32^\circ) + x L$; or the sensible heat plus latent heat per lb. of this wet steam.

Where, S = Sensible heat required to raise 1 lb. of water from 32° to t_s°,
or S = 297·9 B.T.U., from Table II.
And, L = Latent heat of dry steam at pressure p and temperature t_s° = 884, also from Table II.

Hence, $E_f = \frac{S - (t_f° - 32°) + x L}{966}$; and, $W_a = E_f \times W_s$.

Or, $E_f = \frac{297·9 - (100 - 32) + ·9 \times 884}{966}$;

$\therefore$ $E_f = 1·03$; and, $W_a = 1·03 \times 10 = 10·3$ lbs.

Note.—If an engineer under these circumstances had assumed, that this boiler was generating dry saturated steam (instead of testing the same carefully for wetness by an instrument such as we are about to describe, and finding 10 per cent. moisture) he would have over-rated the boiler as capable of producing 11·53 lbs. of dry steam from and at 212° F. instead of only 10·3 lbs. This over-estimate would have been nearly 12 per cent. too much. We shall deal with superheated steam in Lecture XV.

Steam Calorimeter* or Dryness Fraction Indicator.—Of late, many efforts have been made to devise, construct, and use an instrument which would enable the engineer to tell accurately and quickly the wetness of the steam he was using under different circumstances and from different kinds of boilers. Although many forms of such an instrument have been placed at the disposal of the engineer, yet there seems to be a belief that they do not indicate correctly under widely different conditions. However, we herewith illustrate, describe, and give an example obtained by means of the steam calorimeter originally designed by Mr. George H. Barrus, of Boston, U.S.A., and made in this country by M'Innes-Dobbie, of Glasgow. This instrument, if thoroughly lagged throughout, and skilfully used, does give useful results. Its construction and action will form a fitting termination to this Lecture, and the student should therefore study the same with due interest.

The following apparatus consists of two distinct parts, viz.:—

(1) The wet steam separator chamber, S C.
(2) The wire-drawing or throttling chamber, T C.

To enable the student to clearly understand the separate actions which take place in the two chambers, S C and T C, let us assume in the first instance that the throttling chamber is removed, and that the copper coil or cold water condensing pipe is transferred from the outlet pipe, O P, to the discharge branch, D B. Then, the percentage weight of moisture which the

* As will be seen from the definition of calorimetry, and its derivation given in Lecture IV., the term steam calorimeter is a misnomer; for, we do not measure the *quantity of heat* per lb. of steam, but simply attempt to ascertain the *dryness fraction*, or the wetness or percentage of moisture in a steam supply from a boiler to a plant by means of this instrument.

separating chamber would trap and detect will be found as follows:—

To find the dryness fraction of steam by means of the separating chamber alone.—Steam must be allowed to pass for a short time

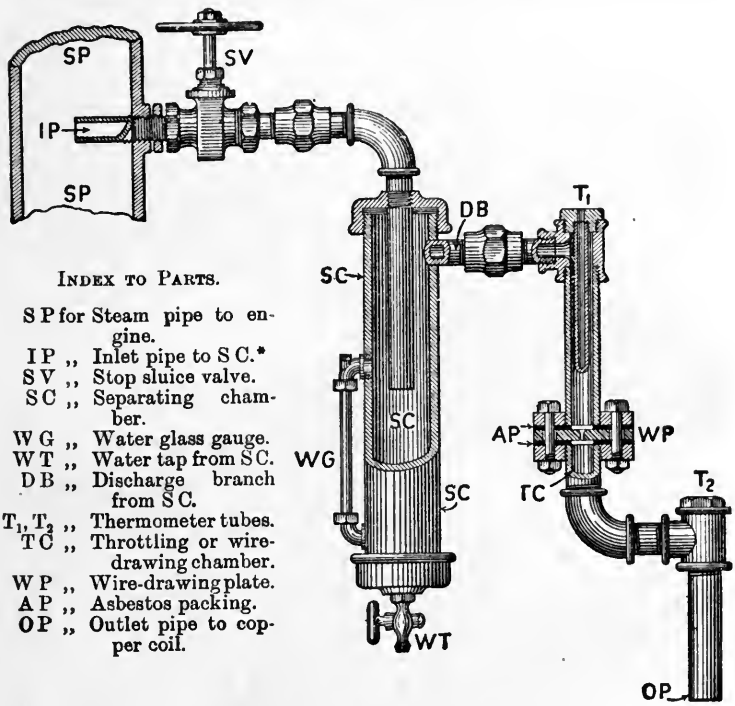

INDEX TO PARTS.

S P	for	Steam pipe to engine.
I P	,,	Inlet pipe to S C.*
S V	,,	Stop sluice valve.
S C	,,	Separating chamber.
W G	,,	Water glass gauge.
W T	,,	Water tap from S C.
D B	,,	Discharge branch from S C.
T_1, T_2	,,	Thermometer tubes.
T C	,,	Throttling or wire-drawing chamber.
W P	,,	Wire-drawing plate.
A P	,,	Asbestos packing.
O P	,,	Outlet pipe to copper coil.

THE BARRUS STEAM CALORIMETER.
Made by M'Innes-Dobbie, of Glasgow.

* Some engineers object to the calorimeter steam inlet pipe, I P, having its end closed, with only thin slits on its top side, as this wire draws the steam at that point. It might, thereby, convey to the calorimeter drier steam than was passing along the steam pipe, S P, to the engines. This error may be obviated by so perforating I P that the steam freely enters it through holes drilled on all sides; the combined area of these holes being greater than the cross-sectional area of the I P pipe. The main object of the particular form of inlet to I P, as well as the distance to which it is inserted into S P, is to obtain a fair average sample of the steam which does pass, under recognised conditions, from the boiler to the engine or other appliance where it is used.

through the separating chamber, S C, by opening S V and W T in order to warm it; otherwise a quantity of water would accumulate, due to initial condensation. Then close W T, and the steam, after passing through the separating chamber, will be condensed by means of the copper coil which is attached to D B, and immersed in cold water. This coil should have sufficient cooling surface to condense all the steam. The condensed steam thus formed is collected in a vessel as it drops from the outer end of the copper coil, and carefully weighed.

When the copper coil is used for condensing the steam, the "dryness fraction" is calculated thus :—

Let W_1 = Weight of dry steam condensed by the copper coil.
W_2 = Weight of water found in the separating chamber, or weight of trapped moisture obtained from W T.
x = "Dryness fraction" of steam.

Then,

Total weight of steam used = $W_1 + W_2$. Hence, $x = \frac{W_1}{W_1 + W_2}$.

EXAMPLE VI.—If $W_1 = 2{\cdot}1$ lbs., and $W_2 = {\cdot}37$ lb.,

The *dryness fraction*, $x = \frac{W_1}{W_1 + W_2} = \frac{2{\cdot}1}{2{\cdot}1 + {\cdot}37} = {\cdot}85$.

Or, ,, ,, $x = 85$ per cent. of apparently dry steam.

The amount of moisture found in the steam is therefore about 15 per cent. by this first chamber alone.

Second.—To find the dryness fraction of steam by means of the wire-drawing chamber alone.—When the amount of moisture present in the steam is not above 3 to 4 per cent., a throttling calorimeter may be used. In this form of calorimeter the steam passes from the main steam pipe, S P, at boiler pressure into the throttling chamber, T C, wherein it falls nearly to atmospheric pressure, and passes away by the exhaust outlet pipe, O P, at the bottom of the chamber. The temperature, t_1, of the steam as it comes from S P, is obtained by a thermometer placed in the tube, T_1. This temperature, t_1, enables us to ascertain from the tables in Lecture VII. and text of Lecture IX. the sensible heat, S_1, of the steam at that temperature, t_1. The temperature, t_2, of the steam in this chamber, T C, is taken by means of a thermometer placed in tube T_2, and this temperature is then compared with the normal temperature, t_3, of the steam due to its pressure, as found by an attached steam gauge at this place, and from the tables in Lecture VII.

The action of this wire-drawing part depends upon the fact,

that the total heat of steam at the higher pressure is greater than the total heat at the lower pressure. Hence, a quantity of heat is set free from the steam as it drops in pressure. It is this heat which goes, *first*, to evaporate and convert the suspended globules of water into steam; and, *second*, to superheat the steam at the lower pressure, if the excess of heat be sufficient to do so.

Let H_{T_1} = Total *heat* per pound of steam passing T_1 at the temperature t_1.
" H_{T_2} = Total heat per pound of steam passing T_2 due to its reduced pressure at temperature t_2.
" S_1 = Sensible heat per pound of steam at temperature t_1 from 32° F.
" S_2 = Sensible heat per pound of steam at temperature t_2 from 32° F.
" L_1 = Latent heat per pound of steam at temperature t_1.
" L_2 = " " " t_2.
" x = Dry steam per pound of steam generated, or the "dryness fraction."
" H_σ = Specific heat of steam which is taken as ·48 and constant.
" t_1 = Temperature of steam in main steam pipe, as measured at tube T_1.
" t_2 = Temperature of steam below W P through which it has been wire-drawn to a lower pressure, and measured at tube T_2.
" t_3 = Normal temperature of steam in T C due to its pressure by gauge.

But, $H_{T_1} = S_1 + x L_1$, and $H_{T_2} = S_2 + L_2$, when the moisture is just evaporated (from Lectures IX. and XI.).

If there be sufficient excess of heat to superheat the steam at T_2, then the heat required to do so $= H_\sigma (t_2 - t_3)$.

Therefore, $H_{T_1} = H_{T_2} + H_\sigma (t_2 - t_3)$.

Or, $S_1 + x L_1 = S_2 + L_2 + \cdot 48 (t_2 - t_3)$.

Hence, $$x = \frac{S_2 - S_1 + L_2 + \cdot 48 (t_2 - t_3)}{L_1}.$$

EXAMPLE VII.— Let $t_1 = 338°$ F., $t_2 = 250°$ F., and $t_3 = 216 \cdot 3°$ F. This last value is the temperature of saturated steam from table, Lecture VII., corresponding to an absolute pressure of 16 lbs. per square inch, or exhausting at, say, 1 lb. above atmospheric pressure.

Then, from Table I., Lecture VII., and reckoning from 32° F. as the zero of temperature, we get :—

$$H_{T_2} = 1{,}158 \text{ B.T.U.}, \quad L_1 = 876{\cdot}3 \text{ B.T.U.}, \quad S_1 = 308{\cdot}7 \text{ B.T.U.}$$

Then, $$x = \frac{S_2 + L_2 + {\cdot}48\,(t_2 - t_2 - S_1}{L_1}.$$

Or, $$x = \frac{1{,}158 + {\cdot}48\,(250 - 216{\cdot}3) - 308{\cdot}7}{876{\cdot}3},$$

i.e., $$x = \frac{849{\cdot}3 + 16{\cdot}17}{876{\cdot}3} = \frac{865{\cdot}5}{876{\cdot}3} = {\cdot}987.$$

Hence, $x = 98{\cdot}7$ **per cent.** Or, the weight of moisture computed from the formula is about 1·3 per cent.

When the steam is first passed through the separating chamber, S C, and then through the throttling or wire-drawing chamber, T C, on its way to the copper pipe condensing coil, as in the form of instrument just described and illustrated, then the total percentage of moisture in the steam as it comes from the steam pipe, S P, is obtained by *one* test, and the separate results from the separator chamber, S C, and throttling chamber, T C, have to be added, to give the total moisture found in the steam.

In the above example we found that the water collected from the separating chamber, S C, was = 15 per cent.
And, the water collected from the wire-drawing or throttling chamber, T C, was . . = 1·3 „
Hence, the total quantity of moisture present in the steam as it came from S P was . . = 16·3 „

LECTURE XI.—QUESTIONS.

1. How many foot-lbs. of work or units of heat are absorbed in converting 5 lbs. of water at 32° F. into *dry steam* at atmospheric pressure? Illustrate your answer by diagrams similar to that given in the Lecture, showing the internal and external work done on the water by the heat. *Ans.* 5,730 B.T.U.; 4,460,000 ft.-lbs.

2. Define the terms "Internal Work" and "External Work," with reference to the generation of steam. How is the efficiency of a steam engine expressed? Illustrate your answers by taking an example and working out the various quantities arithmetically.

3. A boiler generates dry steam at an absolnte pressure of 95 lbs. per square inch from feed water at 60° F. What percentage of heat will be saved by a feed-heater which raises the temperature of the feed water to 212° F.? *Ans.* 13·18 per cent.

4. A non-expansive engine uses steam at an absolute pressure of 60 lbs. per square inch, and makes 60 double strokes per minute. The area of the piston is 1 square foot, and the length of the stroke is 12 inches. Find (1) Weight of steam used per minute; and (2) Total heat expended per minute, the temperature of the feed water being as 60° F. *Ans.* (1) 17·1 lbs.; (2) 19,600 B.T.U.

5. A lb. of water at 60° F. is converted, at constant pressure, into dry steam at 75 lbs. per square inch absolute. Find (1) Total heat expended; (2) External work done during evaporation; (3) Internal work done during evaporation; (4) Work done in raising temperature of water. Construct a diagram showing graphically these various quantities of work. *Ans.* (1) 1,148 B.T.U.; (2) 79·8 B.T.U.; (3) 819 B.T.U.; (4) 247 B.T.U.

6. Suppose, in Question 5, that the 1 lb. of water had been converted into wet steam containing 10 per cent. of suspended moisture. Find (1) Internal work; (2) External work done during evaporation. *Ans.* (1) 737 B.T.U.; (2) 71·8.

7. A boiler supplies steam with 10 per cent. of suspended moisture, the evaporation taking place at 320° F. from feed water at 100° F. Find total heat expanded per 1 lb. of steam formed, and the weight of water which could be evaporated from and at 212° F. for the same expenditure of heat. *Ans.* 1,022 B.T.U.; 1·056 lbs.

8. An engine works non-expansively with condensation. The initial pressure of the steam is 25 lbs. by gauge, and the back pressure is 3 lbs. absolute. Temperature of feed water 104° F. Find (1) Effective work per lb. of steam used; (2) Weight of steam used per hour per H.P.; (3) Total heat expended per hour per H.P.; (4) Steam efficiency; and (5) Heat rejected to condenser per lb. of steam used. *Ans.* (1) 71 B.T.U.; (2) 35·8 lbs. nearly; (3) 39,100 B.T.U.; (4) 6·5 per cent.; (5) 1,020 B.T.U.

9. What do you understand by "saturated steam" and "specific volume" of steam? A locomotive has two cylinders each of 18 inches diameter, the crank-arm measures 13 inches, and the engine makes 200 revolutions per minute. If the initial *gauge* pressure of the steam is 160 lbs. per square inch and it is cut off at $\frac{1}{4}$ of the stroke, how many gallons of water would be required per hour for the supply of the boiler? Neglect all losses from condensation and leakage. 1 lb. of steam at 175 lbs. per square inch measures 2·9 cubic feet. *Ans.* 1,490 gallons.

10. The calorific value of a fuel is 15·5 in standard evaporation units. How much steam at 300° F. will such a fuel produce if the feed water is at

60° F., and if all the heat could be utilised? Why is it impossible to utilise all the heat even in the most perfect boiler? *Ans.* 13·1 lbs.

11. Describe a wire-drawing calorimeter for determining the wetness of the steam flowing along a steam pipe. What do you consider the chief difficulties in obtaining accurate results with such an appliance. In a test made with such an instrument the temperature of the wet steam was found to be 327·5° F., and after passing the wire-drawing orifice the temperature of the dried steam was 247·5° F. What was the wetness fraction for this steam?

12. An engine uses 12·3 lbs. of steam per hour per H.P. developed. This steam is supplied to it superheated 150° F., and at a pressure of 150 lbs. absolute, the saturation temperature for such pressure being 358° F., the boiler feed temperature is 125° F.: calculate—(*a*) How many thermal units per hour per H.P. have to be supplied to the steam by the boiler and superheater (the total heat in a pound of saturated steam from a feed temperature of 32° F. is = 1,082 + 0·3 t thermal units, $t°$ being the temperature of the steam, and the specific heat of steam at constant pressure may be taken as 0·48); (*b*) How many thermal units are converted per hour per H.P. into work; (*c*) The thermal efficiency of the engine. *Ans.* (*a*) 15,513 B.T.U.; (*b*) 2,540 B.T.U.; (*c*) 16·4 per cent.

13. A steam electric generator on three long trials, each with a different point of cut-off on steady load, is found to use the following amounts of steam per hour for the following amounts of power:—

Lbs. of steam per hour, .	4,020	6,650	10,800
Indicated horse-power. .	210	480	706
Kilowatts produced, . .	114	290	435

Find the indicated horse-power and the weight of steam used per hour when 330 kilowatts are being produced. Find in the four cases the amounts of steam used per Board of Trade unit (that is, per kilowatt hour).

14. An engine uses 4,000 lbs. of wet steam per hour at 170° C., there being 90 per cent. steam and 10 per cent. water. If the feed water was at 20°, how much heat is supplied? If the indicated horse-power is 140, how much heat energy is indicated per hour? If we imagine no heat to be radiated, and if the circulating water of the condenser is raised 10° C., how many lbs. of circulating water are being used per hour?

LECTURE XI.—A.M.INST.C.E. QUESTIONS.

1. What do you understand by the terms "internal work," "external work," and "total heat of evaporation" as applied to a vapour? What is the numerical value of each for the evaporation of 1 lb. of water supplied at a temperature of 60° F. and evaporated at 392° F.? *Ans.* H = 1,172 B.T.U.; external, 66,500 ft.-lbs.; internal, 577,000 ft.-lbs.

2. (*a*) What is the greatest evaporation per lb. of coal which you could obtain under standard conditions from an ideal boiler? Show how you arrive at your results. (*b*) State approximately the highest recorded results of which you are aware, obtained with three different types of boiler.

3. If you found that a simple steam engine supplied with steam at a pressure of 110 lbs. per square inch (temperature = 335° F.) and exhausting into the atmosphere had developed 10 I.H.P. for the expenditure of 250 lbs. of coal per hour, and that a compound condensing engine supplied with steam at 90 lbs. per square inch (320° F.) had developed 10 I.H.P. for the expenditure of 175 lbs. of coal, which engine would you consider the more perfect, and why? *Ans.* Ratio of efficiencies 1·43 : 1.

4. If steam is formed in a boiler at an absolute pressure of 165 lbs. per square inch (t = 366° F.), the feed-water being supplied at 60° F., into what parts may the heat supplied be divided, and what will be the numerical value of each per lb. of steam evaporated? *Ans.* H = 1,164 B.T.U.; S = 306 B.T.U.; L = 858 B.T.U.; H_E = 83 B.T.U.; H_I = 1,081 B.T.U.

5. Distinguish between the "internal work" and the "external work" done in changing the state of a fluid. If the heat expended in generating a pound of steam be 1,000 thermal units and the external work done be 60,000 foot-lbs., find how much internal work is done.

6. A water-lifter of the Pulsometer or injector type, in which the steam and water mix, is used to raise water through a height of 20 feet, the inlet temperature of the water is 60° F., and the outlet 72° F. The total heat of the steam from 32° F. is 1,160 B.T.U. per lb. Find the weight of steam used per useful H.P. hour. *Ans.* 1,050 lbs.

7. The total heat required to convert water at 32° F. into dry saturated steam at t° F. is 1,082 + 0·305t thermal units, and dry steam at 150 lbs. absolute pressure per square inch occupies 2·97 cubic feet per lb. and is at a temperature of 358° F. If, in a boiler, 5 lbs. of wet steam occupied 13 cubic feet at 150 lbs. per square inch absolute, find the dryness fraction; and, if the feed temperature is 60° F., find what weight of dry steam from and at 212° F. would take up the same number of heat-units as the 5 lbs. of wet steam. *Ans.* Dryness fraction, ·875; weight of dry steam, 5·45 lbs.

8. Define "internal heat of evaporation," "external work during evaporation," "latent heat," "sensible heat," and give the numerical values of each for 3 lbs. of water supplied to a boiler at 55° F. and evaporated at 309° F.

9. If the steam space of a boiler contains 7 lbs. of steam at 30 lbs. absolute pressure per square inch (t = 251° F.), and the pressure is raised to 170 lbs. absolute per square inch (t = 368° F.), the same volume as before being filled with steam, how many thermal units must have been added, leaving out of account the heat contained in the water in the boiler.

10. Give an expression for the total heat of evaporation of steam at a given pressure. A boiler evaporates 9·6 lbs. of water per lb. of coal at a pressure absolute of 150 lbs. per square inch, temperature 358° F.; if the feed temperature be 90° F., find the evaporation from and at 212° F.; if the coal has a calorific value of 15,500 B.T.U. per lb., find the boiler efficiency *Ans.* 70·1 per cent.

11. Distinguish between the heat which is expended in "internal" and that expended in "external" work during the expansion of a gas. Illustrate your answer by reference to different expansive processes, and graphically represent by sketches the two kinds of work.

12. How many British thermal units will a condensing marine engine use per I.H.P. per minute if the admission temperature is 380° F. and the exhaust temperature is 120° F.? Assume a reasonable thermal efficiency.

13. Having given an indicator diagram from a steam engine and full particulars as to the scale of the diagram and the dimensions of the engine, show how you would calculate the weight of steam present in the cylinder at any convenient point in the expansion process.

14. Calculate the number of British thermal units supplied per lb. of steam, starting from water at 70° F. and generated in a boiler at a pressure of 150 lbs. per square inch (temperature 358° F.) and afterwards superheated to a temperature of 500° F. You may assume the common value for the specific heat of superheated steam to be correct. *Ans.* 1,220 B.T.U.

15. The total steam used by an engine was 660 lbs. per hour when the I.H.P. was 20, and 2,100 lbs. per hour when the I.H.P. was 100. Assuming Willans's straight-line law to hold, find the consumption of steam per I.H.P. and per B.H.P. hour, when the engine indicates 25 H.P. and 80 H.P. respectively. You may assume that the power required to overcome the friction of the engine is 17 I.H.P. at all loads. This may be solved graphically by setting off the lines to scale in your answer-book, or it may be calculated. *Ans.* (1) 93·7 lbs. per B.H.P. hour, 30 lbs. per I.H.P. hour; (2) 26·03 lbs. per B.H.P. hour, 21·7 per I.H.P. hour.

16. A direct-acting steam-pump has steam supplied during the whole stroke; assuming that there are no cylinder losses and that the steam is exhausted at a pressure of 2 lbs. per square inch above the atmosphere, find the number of pounds of steam used per I.H.P. hour. Steam-pressure 80 lbs. per square inch (by gauge). Number of cubic feet of steam per lb. at the above-mentioned pressure 4·62. *Ans.* 38·6 lbs. per I.H.P. hour.

17. Calculate the number of thermal units required to produce 7·6 lbs. of wet steam at a pressure of 110 lbs. per square inch (temperature 335° F.) starting from water at a temperature of 40° F. Weight of moisture 9 per cent. *Ans.* 8,330 B.T.U.

18. If saturated steam be supplied at a temperature of 353° F. to a non-condensing unjacketed steam engine in which there are no cylinder losses, and in which all the conditions are steady, find the smallest percentage of water that it is possible to get in the exhaust when the engine is converting into mechanical work 60 thermal units per lb. of steam supplied. (*Note.*—The total heat of steam from 32° F. generated at a temperature t is $1{,}082 + 0{\cdot}305\,t$.)

19. The following results were obtained from a test of a gas engine Make out as complete a heat account as the data will allow:—

Indicated horse-power, ...	15·1
Cooling water—weight used per hour, . . .	910 lbs.
,, inlet temperature, . . .	59° F.
,, outlet temperature, . . .	145° F.
Cubic feet of gas used per hour, ...	318
Calorific value per cubic foot of gas, . . .	610 B.T.U.

—*Ans.* Heat supplied = 3,233 B.T.U.; heat converted into work = 641 B.T.U.; lost in cooling water, 1,304 B.T.U.; balance, 1,288 B.T.U.

LECTURE XII.

CONTENTS.—Pressure and Volume of a Gas—Boyle's Law—Pressure, Volume, and Density—Watt's Diagram of Work, with Examples—Questions.

Pressure and Volume.—We saw in Lecture VII., by the experiment with Marcet's boiler and from Regnault's tables, that the pressure of steam increased with the temperature; we now come to consider the relation which exists between *pressure and volume.*

To understand this we here state the *first law* in regard to the expansion of gases, viz., Boyle's, and then give a class experiment to prove it.

Boyle's Law.—The pressure of a portion of a (perfect) gas *at a constant temperature* varies inversely as the space it occupies.

Or, let p = pressure in lbs. per sq. in.
v = volume in cub. ft. per lb. weight.
Then $p\,v$ = constant.

To illustrate this law the following simple piece of apparatus may be used:—

It consists of a small metal box, B, to which are attached two glass tubes, G T, one a little more than 35″ long, and the other fully 10″. A stop-cock, S C, is screwed into the metal box, and the short tube is provided with a screw plug, S P. The whole is fixed to a board, on which there is a graduated scale of inches.

Mercury is poured into the long tube and the screw plug, S P, is taken out until the mercury rises in both tubes to the zero line. The screw plug is then replaced and encloses a column of air 10″ high in the short tube. Supposing the barometer to stand at 30″, we now continue pouring mercury into the long tube until the level of the mercury in it is 30″ above the

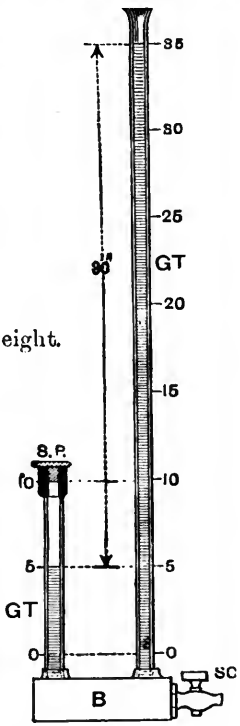

G T for Glass tubes.
B ,, Box (air tight)
S C ,, Stop-cock.
S P ,, Screw plug.

level of the mercury in the short tube. When this point, 35", is reached, the mercury in the short tube will be found to stand at 5". The air in the short tube has thus been subjected to an additional pressure of 30" of mercury, *i.e.*, to an additional pressure of one atmosphere; therefore, its pressure has been doubled. Before applying this pressure it occupied 10" of the tube; hence we see that its volume has been reduced by one-half by doubling the pressure on it, in accordance with the law just stated. It is important that the student should not overlook the fact, that this law is true, *only* when the temperature remains constant.

Since the pressure of an enclosed perfect gas kept at a constant temperature varies *inversely* as its volume, and since the density or weight per unit volume of the same, varies *inversely* as its volume, it follows that the pressure varies *directly* as the density.

This law is not perfectly fulfilled by any actual gas, but very nearly so by those gases, such as air, which cannot be condensed into liquids. When a gas is about to pass by condensation into a liquid (*e.g.*, steam on the point of being transformed into water), then the density increases more rapidly than the pressure.

Watt, however, assumed that Boyle's law held good in the case of steam, and he applied it in a most ingenious manner to prove the economy of the expansive working of steam in a cylinder, and to show that he could get a greater amount of work from the steam by cutting it off early in the stroke, and thus allowing it to force the piston forward during the remainder of the stroke, merely by expansion.

Watt's Diagram of Work.—Although, as we shall see later on, steam does not expand in strict accordance with Boyle's law (for the temperature of the steam falls the more it is expanded, unless external heat is applied to it, to make up for the loss due to the work got out of it), yet we shall gain a great insight into the action of steam in an engine cylinder, by first discussing "Watt's Diagram of Work done during Expansion," and then applying the corrections that have since been found necessary, in order to truthfully represent the actual state of matters.

The following figure will illustrate to the student the method adopted by Watt. The horizontal line, or abscissa, A B, indicates the length of the stroke, and is divided into 10 equal parts; the vertical line, or ordinate, A C, represents the pressure of steam used by Watt, say one atmosphere, and is also divided into 10, or decimal parts of an atmosphere of pressure. When the piston has travelled the distance, C D, *i.e.*, $\frac{2}{10}$ or $\frac{1}{5}$ of the stroke, the steam is cut off, and the remainder of the stroke is effected by

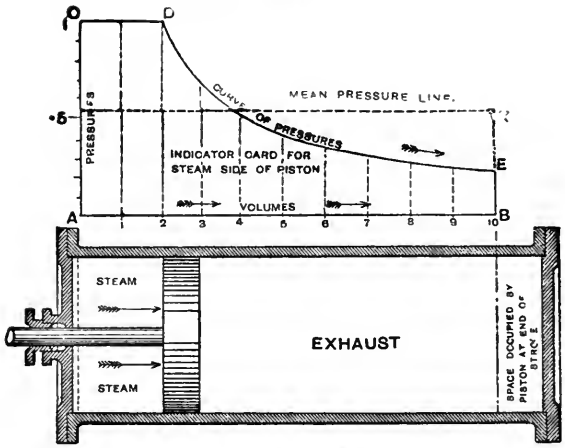

WATT'S DIAGRAM OF WORK.

the expansive action of the steam. The gradually falling curve, D E, marked "curve of pressures," is found by drawing verticals from each of the divisions of the stroke, 3, 4, ... 10, and marking them off in height corresponding to the pressures, p, at these points by the following formula, and joining their upper ends by a curved line:—

$$p\,v = \text{a constant, or } p = \frac{\text{constant}}{v}.$$

Where v = the volume swept out by the piston at the several points, and is, therefore, represented by the different distances, 2, 3, ... 10, from the commencement of the stroke.

For example—

At point of cut off
$p = 1$
$v = 2$
$\therefore$ Constant $= p\,v$
$= 1 \times 2$
$= 2$

				Atmosphere.
At point 1, p				1
,, 2, p				1
,, 3, p	$= \frac{\text{constant}}{v}$	$= \frac{2}{3}$	$=$	0·66
,, 4, p	$=$,,	$= \frac{2}{4}$	$=$	0·5
,, 5, p	$=$,,	$= \frac{2}{5}$	$=$	0·4
,, 6, p	$=$,,	$= \frac{2}{6}$	$=$	0·33
,, 7, p	$=$,,	$= \frac{2}{7}$	$=$	0·29
,, 8, p	$=$,,	$= \frac{2}{8}$	$=$	0·25
,, 9, p	$=$,,	$= \frac{2}{9}$	$=$	0·22
End of stroke, ,, 10, p	$=$,,	$= \frac{2}{10}$	$=$	0·2
Dividing by the Number of Parts, viz.,				10 | 4·85
We get roughly a Mean Pressure				= ·485*

*This mean pressure is less than the true mean as explained at next page and in Lecture XVII. In *actual* indicator diagrams, the pressures are found by measuring the *mid-ordinates* in the spaces A-1, 1-2, 2-3, ..., 9-10. This gives a closer approximation of the average pressure.

By adding the several pressures, and dividing them by the number of divisions taken—viz., 10—we get the average pressure throughout the stroke, = ·485 of an atmosphere, or nearly half an atmosphere. The economy of cutting off the steam before the end of the stroke will, therefore, be at once apparent, for we have obtained an average pressure equal to nearly half that which would have been obtained by carrying full steam pressure throughout the whole stroke, and have only used ½ of the quantity of steam.

Since work done is measured by force or pressure, multiplied by the distance through which the force or pressure acts, the area of the rectangle, A D (see upper part of previous Fig.), being equal to the pressure, A C, if reckoned in lbs., multiplied by the distance, A 2, or, C D in feet, measures to scale the work done upon the piston by the steam up to the point of cut-off in foot-pounds or units of work. In the same way, the area of the rest of the figure—viz., D E B 2, measures to scale the work done upon the piston by the steam while expanding in the cylinder, also in foot-pounds; for this area is equal to the mean pressure in lbs. between the points, D and E, multiplied by the distance, 2 B, in feet. Consequently, the area of the *whole* figure, A C D E B, measures to scale the *whole* work done by the steam in one stroke in foot-pounds. This area is equal to the calculated mean pressure throughout the stroke, multiplied by the whole stroke, A B, and expresses the result of Watt's diagram of work. Watt, in calculating the mean pressure throughout the stroke, assumed that the pressure at each of the points into which he divided the stroke commencing with number 1, remained constant until it arrived at the next in order, by which method he obtained a less value than the true mean, because he omitted to take into account the ordinate of pressure at the point, A, or the very commencement of the stroke. If we now take into account the first ordinate at A, as well as the last one at 10, we have the following eleven pressures:—1, 1, 1, ·6̇, ·5, ·4, ·3̇, ·29, ·25, ·2̇, and ·2; giving a total sum of 5·86, which sum being divided by the number of ordinates, viz., 11, gives us a mean of ·532 of an atmosphere instead of ·485, or nearly 8 lbs. pressure on the square inch, which is a nearer approximation to the true mean.

Let us take another example of Watt's diagram of work, taking the first as well as the last pressure ordinate into account, in order to get a nearer approximation to the true mean. Suppose we have an engine using steam of 100 lbs. pressure per square inch, and cutting off at ¼ of the stroke, to find the curve of expansion by Boyle's Law and the mean pressure.

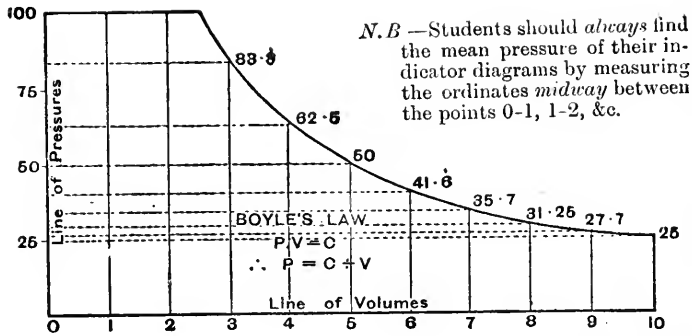

N.B.—Students should *always* find the mean pressure of their indicator diagrams by measuring the ordinates *midway* between the points 0-1, 1-2, &c.

As before—

Constant $= p\,v$

,, $= 100 \times \frac{1}{4}$

,, $= 25$

At 0, p	. . . . .				100	lbs.
At point 1, p	. . . . .				100	,,
,, 2, p	. . . . .				100	,,
,, 3, $p =$	$\frac{\text{constant}}{v}$	$=$	$\frac{25}{\cdot 3}$	$=$	83·3	,,
,, 4, $p =$	,,	$=$	$\frac{25}{\cdot 4}$	$=$	62·5	,,
,, 5, $p =$	,,	$=$	$\frac{25}{\cdot 5}$	$=$	50·0	.
,, 6, $p =$	,,	$=$	$\frac{25}{\cdot 6}$	$=$	41 7	,,
,, 7, $p =$	,,	$=$	$\frac{25}{\cdot 7}$	$=$	35·7	,,
,, 8, $p =$	,,	$=$	$\frac{25}{\cdot 8}$	$=$	31·2	,,
,, 9, $p =$	,,	$=$	$\frac{25}{\cdot 9}$	$=$	27·8	,,
,, 10, $p =$	,,	$=$	$\frac{25}{1}$	$=$	25·0	,

Dividing by the Number of Points, viz., 11 | 657·2

We get an approximate Mean Pressure = 59·7 lbs.

There are several rules for obtaining approximately the mean pressure from a diagram of work such as we have been discussing. The plan most commonly adopted by engineers (as we shall see at Lecture XVI.) in finding the mean pressure from actual indicator diagrams is, to measure by a suitable scale or rule the length of each of the ten ordinates, taken at the centre of each of the ten spaces into which the diagram is divided, add them together, and divide by their number. For instance, applying this rule to the last example, we should measure the length of the vertical lines midway between the points 0 and 1, 1 and 2, 2 and 3, ... 9 and 10, add these ten pressure ordinates

together, and divide the sum by 10, to get the mean pressure; and doing so (or calculating these pressures by pv = constant), we find them to be respectively, 100, 100, 100, 71·43, 55·5, 45·45, 38·46, 33·3, 29·41, and 26·31 lbs., giving a mean of 59·9 lbs., or slightly greater than that found above.

Simpson's Rule is as follows:—Divide the length of the figure into n equal parts, n being an even number, and draw ordinates through the points of division to touch the boundary lines. Add together the first and the last ordinates, call the sum A; add together the even ordinates 2, 4, 6, &c., call the sum B; add together the odd ordinates 3, 5, 7, &c., except the first and the last, and call the sum C; then $\frac{A+4B+2C}{3n}$ = mean ordinate or pressure. This quantity multiplied by the length, L, of the figure gives the area of the figure, or what we would call the area of work in this case.

Methods of Constructing the Curve of Pressures and Volumes by Boyle's Law.—We shall now show how to construct the curve for the relation between pressure and volume of a perfect gas expanding according to Boyle's law. This curve may be constructed in two different ways :—

1. By making use of the formula expressing Boyle's law—viz., pv = a constant, and thus calculating the pressure at various points during the expansion.

2. Or, we may adopt a purely graphical method for determining a series of points on the curve. The *curve of expansion* can then be drawn freehand or by aid of French curves, or by bending a thin flexible strip of wood until its lower edge passes through the several points. These two methods will be clearly understood from the solution of the following example.

EXAMPLE I.—Steam is admitted into the cylinder of an engine at a pressure of 30 lbs. by gauge, and is cut off at $\frac{1}{3}$ of the stroke. Draw to scale the diagram of work done during admission and expansion, assuming that the steam expands according to Boyle's law. From the diagram thus constructed, find the pressures at $\frac{3}{8}$, $\frac{5}{8}$, and $\frac{7}{8}$ of the stroke respectively.

ANSWER.—**First Method, by Calculation.**

Draw two axes O P, O V, at right angles to each other. Along O P, measure off a distance O A, to represent the initial absolute pressure of the steam.*

* The initial pressure as given by the question is 30 lbs. by gauge. The pressure as indicated by a steam gauge on a boiler or cylinder of an engine, has for its starting (or zero) point, the pressure of the atmosphere—viz., about 15 lbs. per square inch. We cannot, therefore, base our calculations respecting a law of nature on such an arbitrary and variable starting-point as this. Consequently, we must refer all our pressures to the *absolute zero* or perfect vacuum line before applying Boyle's law. The absolute zero is

Along O V, measure off a distance O B, to represent the volume of the stroke.*

Divide O B into any number of parts, equal or unequal in length, and at each point of division raise a perpendicular line of indefinite length. In the figure we have divided the

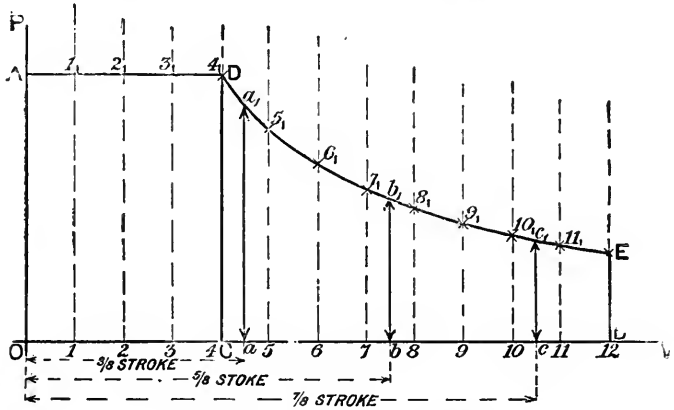

DIAGRAM OF WORK FOR EXAMPLE I.

stroke into 12 *equal* parts, for the following reasons: (1) the number 12 is a multiple of the denominator of the fraction $\frac{1}{3}$ (the fraction of the stroke at cut-off), so that one of the points of division may coincide with the point representing the cut-off; (2) the number of points on the curve will thus be sufficiently numerous or close together to enable us to draw a fairly accurate curve through them; and (3) we have taken the parts of equal length because the stroke will be divided into convenient and easily recognised fractions. We might have divided the stroke into *nine* or even *ten* equal parts, as is usually the case in practice, but, due to the reasons just assigned, we prefer the larger number for the present case.

Denote the pressures and volumes at the points 0, 1, 2, 3 . . . . 12, by the letters p_0, v_0, p_1, v_1, p_2, v_2, p_3, v_3, ... p_{12}, v_{12} respectively.

thus about 15 lbs. (more correctly 14·7 lbs.) per square inch below atmospheric pressure. Hence, the initial absolute pressure of steam = 30 + 15 = 45 lbs. per square inch. We have, therefore, to make O A represent this total pressure.

* Since the cross area of the cylinder is constant throughout the stroke, the line O B will also represent to scale the full stroke of the piston, and the distances O_1, O_2, O_3, &c., definite proportions of the stroke.

Further, let the whole volume of the piston's stroke be denoted by the number 12—*i.e.*, let $v_{12} = 12$. Then, $v_1 = 1$, $v_2 = 2$, and so on. The utility of this notation will be apparent from the following.

The point of cut off coincides with the point 4 ($\frac{1}{3} \times 12 = 4$), as shown by the figure. Now we know that

$p_4 = p_0 = 45$ lbs. absolute, and that $v_4 = 4$,
$\therefore$ by *Boyle's Law*, $pv =$ a constant
$\therefore$ **The Constant** $= p_4 v_4 = 45 \times 4 = 180$.

Calculate and tabulate the pressures at the various points during expansion, thus—

$$p_5 = \frac{const.}{v_5} = \frac{180}{5} = 36{\cdot}00 \text{ lbs. abs.}$$
$$p_6 = \frac{const.}{v_6} = \frac{180}{6} = 30{\cdot}00 \text{ " "}$$
$$p_7 = \frac{const.}{v_7} = \frac{180}{7} = 25{\cdot}71 \text{ " "}$$
$$p_8 = \frac{const.}{v_8} = \frac{180}{8} = 22{\cdot}50 \text{ " "}$$
$$p_9 = \frac{const.}{v_9} = \frac{180}{9} = 20{\cdot}00 \text{ " "}$$
$$p_{10} = \frac{const.}{v_{10}} = \frac{180}{10} = 18{\cdot}00 \text{ " "}$$
$$p_{11} = \frac{const.}{v_{11}} = \frac{180}{11} = 16{\cdot}36 \text{ " "}$$
$$p_{12} = \frac{const.}{v_{12}} = \frac{180}{12} = 15{\cdot}00 \text{ " "}$$

We now possess all the data for completing the diagram. Along the perpendiculars drawn through the points 4, 5, 6 . . . . 12, measure off distances 4, 4_1, 5, 5_1, 6, 6_1 . . . . 12, 12_1 respectively, to represent (according to the scale previously employed for the pressure O A) the pressures p_4, p_5 . . . . p_{12}, given above. Then 4_1, 5_1 6_1 . . . . 12_1, are points on the expansion curve. Join A with point 4_1, and through the points 4_1, 5_1, 6_1 . . . . 12_1, draw carefully by hand (or otherwise as previously directed) an unbroken continuous curve, D E. This is the expansion curve, and is known to mathematicians as a *Rectangular Hyperbola*. The area of the rectangle O A D C represents the work done to the point of cut off; the area of the figure C D E B represents the work done during expansion. The area

of the whole figure O A D E B represents to scale the complete diagram of work.

We are also asked by the question to find, from the diagram thus constructed, the pressures at $\frac{3}{8}$, $\frac{5}{8}$ and $\frac{7}{8}$ of the stroke.

Since the length of stroke has been denoted by the number 12, we, therefore, get—

$$\begin{aligned} \tfrac{3}{8} \text{ stroke} &= \tfrac{3}{8} \times 12 = 4{\cdot}5 \\ \tfrac{5}{8} \quad ,, \quad &= \tfrac{5}{8} \times 12 = 7{\cdot}5 \\ \tfrac{7}{8} \quad ,, \quad &= \tfrac{7}{8} \times 12 = 10{\cdot}5 \end{aligned}$$

These points are easily found, and are indicated on the right-hand part of the figure by the letters *a*, *b*, and *c* respectively. Drawing the *ordinates*, aa_1, bb_1, cc_1, and measuring their lengths, we get, according to the scale of pressures, the following results—

$$\begin{aligned} aa_1 &= 40{\cdot}00 \text{ lbs. abs.} \\ bb_1 &= 25{\cdot}00 \quad ,, \\ cc_1 &= 17{\cdot}14 \quad ,, \text{ *} \end{aligned}$$

Second Method: by Graphical Construction.—As before, draw two axes O P, O V, and measure off the distances O A, O B, to represent the initial pressure and the volume of stroke respectively. Let O C represent the volume swept through by the piston to the point of cut off. Complete the rectangles O A D C, O A F B. Divide C B into any number of equal or unequal parts, and at these several points of division raise perpendiculars to meet the line A F.†

To find points on the expansion curve, join the origin O, with the point 1′, on the line A F. This line cuts the perpendicular C D, in the point 1″. Through point 1″, draw the line 1″ 1_1, parallel to O V, and terminated by the perpendicular through point 1. *The point* 1_1, *is a point on the expansion curve.* Similarly, join O 2′. This line O 2′, cuts the perpendicular C D in the point 2″. Through 2″, draw the line $2''2_1$, parallel to O V, to meet the perpendicular 2, 2′, in point 2_1. *Then, point* 2_1, *is also a point on the expansion curve.* By proceeding in this way, as shown by the figure, we get the series of points 1_1, 2_1, 3_1 . . . .

* These are the exact values, as may be readily proved by calculation. When, however, the measurements are carefully made, and the curve neatly drawn, such results should not differ from the correct results by more than 2 or 3 per cent.

† An inspection of the curve D E (in the previous figure) shows that it is steeper near to the end D than it is towards the end E. Hence, if we use equidistant ordinates, a greater length of curve will lie between two consecutive points near the end D than towards the flatter portion of the curve at E. For this reason, it is advisable to have the points 1, 2, 3 . . . near to C, much closer together than those points towards the end B.

on the curve. The curve can then be drawn through the points thus found.

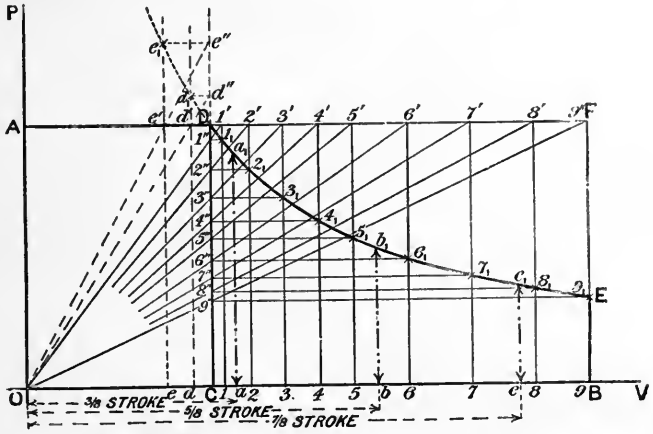

GRAPHIC CONSTRUCTION FOR FINDING POINTS ON EXPANSION CURVE.

The pressures at $\frac{3}{8}$, $\frac{5}{8}$, and $\frac{7}{8}$ of the stroke can then be found as before, by measuring the ordinates through the points a, b, and c respectively.

If the steam was *compressed*, according to Boyle's law, from an initial volume O C, the curve of compression would be a continuation of the curve E D, as shown in dotted line by the figure. The method of drawing the compression curve is identically the same as that described above for the expansion curve. It will be sufficient to show how to find one point on this compression curve.

Suppose we require to find the pressure when the volume is diminished to O d. Through d, draw the perpendicular $D\,D_1$, cutting A F, in the point d'. Join O d', and produce it to meet C D, produced in d''. Through d'', draw $d''d_1$, to meet $d\,d_1$, in d_1. *Then d_1 is a point on the compression curve.*

Proof of above Construction.—That the above construction is mathematically correct may be proved as follows:

Let O A = Initial pressure, p_1,
O B = Volume of stroke,
O C = Volume to cut off, v_1.

Let the pressure and corresponding volume at any other point H

of the stroke be represented by the letters p_h and v_h respectively. Complete the rectangles O A D C, O A F B. Find by the previous construction the point Q, on the expansion curve corresponding

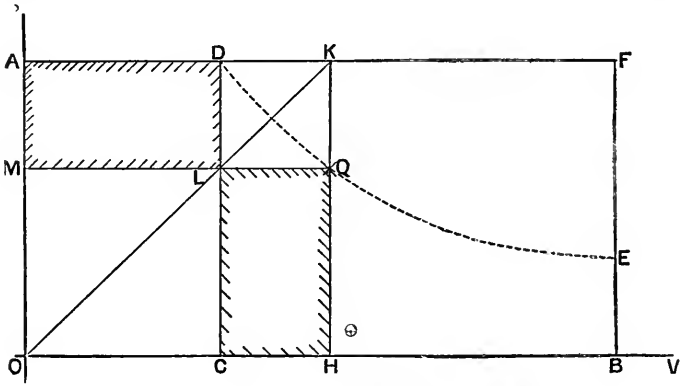

ILLUSTRATING PROOF FOR GEOMETRICAL CONSTRUCTION.

to volume O H. Produce Q L to meet O P in M. Then the area of the rectangle O A D C represents the product, $p_1 v_1 h$, *i.e.* the pressure × the volume at the point C. We have now to prove that—*area of rectangle* O M Q H = *area of rectangle* O A D C.

Since O A K H, is a parallelogram having parallelograms, O M L C, L D K Q, described on its diagonal O K, then the remaining parallelograms M A D L, and C L Q H (which make up the complete figure O A K H) are called *complementary parallelograms*. Now, by *Euclid*, *Book I. proposition* 43, it is proved that the areas of complementary parallelograms are equal. Hence the parallelogram C L Q H = the parallelogram M A D L. Add to each side of this equation the parallelogram O M L C, and we get—

$$\text{Area } O\ M\ Q\ H = \text{Area } O\ A\ D\ C$$

i.e. O M × O H = O A × O C

Or, $p_h \times v_h = p_c \times v_c$

Which proves that Q is a point on the expansion curve.

Simpler Proof.—The following is a still simpler proof. In the similar triangles O L C, and O K H, we get—

C L : C O = H K : H O (Euclid VI.–2.)

$\therefore$ C L × H O = H K × C O

But, C L = H Q, and H K = O A

$\therefore$ H Q × H O = O A × O C

$\therefore$ As before $p_h \times v_h = p_c \times v_c$

Lecture XII.—Questions.

1. State Boyle's law, and describe an experiment to show that the pressure of a gas varies inversely as the space it occupies.

2. Steam is admitted into a cylinder at atmospheric pressure, and is cut off at half stroke. Divide the stroke into 10 equal parts, and, supposing that the pressure at the beginning of each of these portions remains uniform until the piston reaches the next in order, find the pressure at each point as well as the mean pressure.

3. The cylinder of an engine is 25 inches long, and steam is admitted at 18 lbs. total pressure, the final pressure being 4 lbs. At what point of the stroke was the steam cut off? *Ans.* 5·5 inches.

4. Steam is admitted into a cylinder at a pressure of 25 lbs. on the square inch above the atmospheric pressure of 15 lbs. on the square inch, and is cut off at such a point that its pressure at the end of the stroke is 5 lbs. below that of the atmosphere. At what point of stroke was it cut off? Make a diagram, showing approximately the steam pressure on the piston throughout the stroke. *Ans.* ·25 of the stroke.

5. The cylinder of an engine is 25 ins. long. Steam is admitted at 18 lbs. actual pressure, and the final pressure is 4 lbs. Divide the stroke into 10 equal parts; find the steam pressure midway between each division space, and set out Watt's diagram of work done. Find also the mean pressure of the steam, by Watt's, by Simpson's, and by the usual rule.

6. The stroke of a piston is 4 feet 6 inches, the steam is cut off at 9 inches, and the pressure at the end of the stroke is 5 lbs. below that of the atmosphere. At what pressure above the atmosphere was steam let in? 45 lbs.

7. Steam is admitted into the cylinder of an engine at a pressure of 45 lbs. per square inch by gauge, and is cut off at one-third of the stroke. Find the pressure in pounds at half-stroke, and also at the end of the stroke. Show roughly, by a diagram, that additional work is obtained from a given quantity of steam—(1) by cutting off the supply from the boiler before the end of the stroke; (2) by condensing the steam instead of allowing it to escape into the air. *Ans.* 25 lbs.; 5 lbs. above atmosphere.

8. Explain the advantage of working steam expansively and with condensation. Steam is admitted into a cylinder at 30 lbs. above the atmosphere, which is taken at 15 lbs. per square inch, and is cut off at a certain point, and then expands to a pressure of 5 lbs. below the atmosphere. If the length of stroke be $4\frac{1}{2}$ feet, at what point is the steam cut off? *Ans.* 1 foot.

9. The temperature of a condenser is 100° F., and the corresponding pressure from Regnault's tables is ·942 lbs. The vacuum shows 26 inches by gauge, and the barometer stands at 29·9 inches; what part of the increase in back pressure is due to air in condenser? *Ans.* = ·03 lb.

10. The mean steam pressure on a piston being 26 lbs. to the square inch above atmospheric pressure, and the mean vacuum pressure 13·5 lbs. to the square inch, what is the total force exerted on a piston 63 inches in diameter? What would have been the force if the engine had exhausted at atmospheric pressure? *Ans.* 123,131 lbs.; 81,048 lbs.

LECTURE XIII.

CONTENTS.—Charles' Law of the Expansion of Gases—Absolute Zero of Temperature—Finding the Constant C for 1 lb. of Dry Air at 32° F. and at Atmospheric Pressure—Specific Heats of a Gas—Specific Heats of Superheated Steam—Expansion of a Gas doing External Work—Adiabatic Expansion—Heat Engines—Carnot's Principle—Entropy and Thermo-dynamics from an Engineer's Point of View—Questions.

Second Law of the Expansion of Gases.—This law, which was discovered by Charles, and is known as Charles' law, was first published by Dalton in 1801, and independently by Gay Lussac in 1802. It may be stated as follows :—

A gas, under constant pressure, expands by a definite fraction of its volume at 32° Fah., for a given increase of temperature. The amount of this increase of volume has been the subject of careful investigation by many experimenters, and the value assigned by Regnault is that the expansion of a gas between 32° Fah. and 212° Fah. is ·3665 of its volume at 32° Fah. We must also note the remarkable fact that the amount of expansion is the same for all gases. The laws of the expansion of gases are only approximately true for actual gases, but form the essential characteristics of a *perfect gas*. The variation from this second law is very slight in gases which can be liquefied only at temperatures very much below ordinary temperatures; every gas more nearly fulfils this law the more highly it is heated and rarefied. Air, when perfectly dry, deviates but slightly in its behaviour from that of a perfect gas, but when containing moisture, as it almost always does in practice, the deviation is considerable.

Absolute Temperature.—We have seen that a volume of gas falling in temperature from 212° Fah. to 32° Fah., contracts in the ratio of 1·3665 to 1. A curious question now arises—viz., At what temperature will the volume of the gas diminish to nothing? The gas in falling the 180° between boiling and freezing points on the Fahrenheit scale, decreases in volume ·3665 of its volume at freezing point, with what fall in temperature from 32° would it decrease to nothing?

Stating by proportion we have—

$$\cdot3665 : 1 :: 180 : x$$

$$\therefore \quad x = \frac{180}{\cdot3665} = 491\cdot1^\circ \text{ Fahrenheit.}$$

Or, let x = temperature from freezing point; then—

$$\frac{x}{x + 180} = \frac{1}{1\cdot3665};$$

$$\therefore \quad 1\cdot3665\, x = x + 180,$$

$$\cdot3665\, x = 180;$$

$$\therefore \quad x = \frac{180}{\cdot3665} = 491\cdot1^\circ \text{ F.}$$

That is, when the temperature has fallen 491·1° Fah. *below* freezing point, or 459·1° below the zero of Fahrenheit's scale, the gas will occupy no space at all, and all the heat will have been extracted from it. This number, — 459·1°, or practically — 460° Fah., is termed the *absolute zero of temperature*, and corresponds approximately to, — 273° Cent.

The diagram on next page will make this clear.

B Z is a line of temperatures, F being the freezing point and B the boiling point. We know that the ratio of the volume of the gas at F to the volume at B is $\frac{1}{1\cdot3665}$; therefore, if we draw at right angles to B Z, two lines, B A and F E, to represent the relative volumes of the gas at these points, then join A E, and produce it beyond E, we find that it cuts the line of temperatures, B Z, at a point, Z, 492° below freezing point, showing that at that point the volume of the gas has been reduced to nothing.

This absolute zero of temperature has been fixed solely by reasoning, and no temperature so low having ever been obtained, we can assert nothing as to the state of a gas when deprived of all its heat. In questions on thermodynamics and the expansion of gases, it is most convenient to measure temperatures, not from the arbitrary zero of the Fahrenheit scale, but from the absolute zero just found, so that, if t = temperature from Fahrenheit zero, r = absolute temperature Fah. Then $r = t + 460$.

Now, we know that if one quantity varies as a second quantity

when a third is constant, and also varies as the third when the second is constant, it will vary as their product when neither is constant. We may, therefore, express the laws of Boyle and Charles by the formula—*The product of the pressure and volume of any gas is proportional to the absolute temperature—i.e.*,

$$P\,V = 144\,p\,V = c\,r. \quad \text{Or, } c = \frac{P\,V}{r}.$$

Where P = lbs. per sq. ft.; V = vol. in cub. ft.; c = constant for the gas.

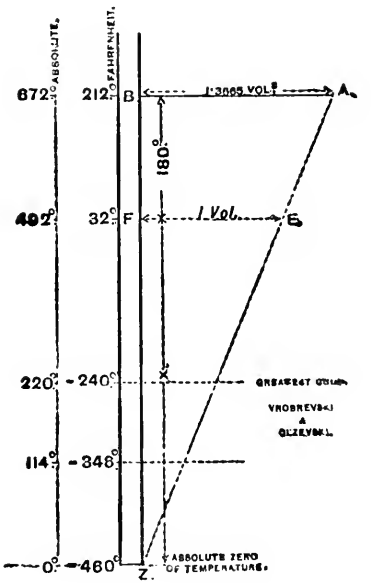

Finding the Constant C for 1 lb. of Dry Air at 32° F. and at Atmospheric Pressure.

Two laws govern the varying volume of a gas, according to whether the temperature or the pressure is kept constant.

The first law of the expansion of a gas is known as *Boyle's Law*, which states that the product of the pressure p (per square inch) and the volume v of a perfect gas is a constant quantity, when the temperature remains constant (see Lecture XII.).

Let P = pressure in lbs. per square foot = $p \times 144$.

V = volume of air in cubic feet = v (in Lecture XII.).

But, the volume of 1 lb. of air at a temperature of 32° F. and at atmospheric pressure (14·7 lbs. per square inch) is equal to 12·387 cubic feet, as derived from a measurement of the density of air by Regnault.

Then, from Boyle's Law, we get—

$$P V = C, \text{ or } C = 144\, p\, V = 144 \times 14{\cdot}7 \times 12{\cdot}387$$
$$= 26{,}220 \text{ ft.-lbs.}$$

Now, we know from the *Charles Law*, that, under constant pressure, equal volumes of different gases expand equally for the same increment of temperature. Also, that the volume changes proportionally to the absolute temperature. Hence, if P be kept constant, V will vary as the absolute temperature τ; so that, if V increases at the same rate as τ, any series of multiples of V will similarly increase. Therefore, if P be such a multiplier, we get—

$$P V \propto \tau; \text{ and } P V = c\, \tau.$$

This equation is strictly general, c being a coefficient or constant depending on the density of the gas. It is, however, a different constant from the C of Boyle's Law.

Taking the 1 lb. of air at 32° F., and at atmospheric pressure, we have—

$$P V = 26{,}220 \text{ foot-lbs.};$$

and $$\tau = 32 + 461 = 492° \text{ F. absolute.}$$

Then, $$P V = c \tau;$$

or, $$c = \frac{P V}{\tau} = \frac{26{,}220}{492} = 53{\cdot}2.$$

Therefore the constant c for air is 53·2.

Specific Heats of a Gas.—The specific heat is the amount of heat in thermal units required to raise unit weight of the gas through 1° F. (see p. 56, Lecture IV.). But, there are two methods of raising the temperature; consequently, the specific heat of a substance varies according to the conditions under which the substance is heated.

Assuming the gas enclosed in a well-lagged vertical cylinder having fitted in it a loose piston (see p. 101), we may, while supplying heat—

(1) allow the piston to rise freely,

or (2) keep the piston afixed.

In (1) we are heating the gas at *constant pressure*, and in (2) at *constant volume*. The first method requires a greater quantity of heat than the latter, because external work is there performed on the piston in addition to the increase in volume of the gas.

Regnault found the specific heat at *constant pressure* of any permanent gas, like air, to be—

$$C_p = \cdot 2375 \text{ thermal unit,}$$

and $$K_p = C_p \times 778 = \cdot 2375 \times 778 = 184{\cdot}8 \text{ ft.-lbs.}$$

He also found, that the specific heat of air at *constant volume*—

$$C_v = \cdot 1691 \text{ thermal unit,}$$

and $$K_v = C_v \times 778 = \cdot 1691 \times 778 = 131{\cdot}6 \text{ ft.-lbs.}$$

Now, the specific heat of a gas at constant pressure is the same at all temperatures. This is a most important law, which shows, that gases, unlike liquids, expand regularly for regular increments of heat.

Let us heat a gas under a constant pressure P, the volume being increased from V_1 to V_2, and the temperature rising from τ_1 to τ_2 absolute ; then—

$$\text{External work} = P(V_2 - V_1) = c(\tau_2 - \tau_1).$$

$$\text{Total heat expanded} = \text{specific heat} \times \text{rise in temp.} = K_p(\tau_2 - \tau_1)$$

$$\text{And, Internal work} = \text{total work} - \text{external work}$$

$$= K_p(\tau_2 - \tau_1) - c(\tau_2 - \tau_1).$$

But, when a gas is heated at constant volume, only internal work is done,

$$\therefore \quad K_v(\tau_2 - \tau_1) = K_p(\tau_2 - \tau_1) - c(\tau_2 - \tau_1)$$

Hence, $$c = (K_p - K_v).$$

This means that c is equal to the difference between the two specific heats expressed in foot-lbs.

NOTE.—The *internal work* is always K_v (final temperature — initial temperature), and may therefore be a positive or negative value, or nothing (see Lecture XI.).

The ratio of the specific heat at constant pressure K_p, *to the specific heat at constant volume*, K_v, enters into many thermodynamic equations, and is usually denoted by the Greek letter γ (gamma), thus—

$$\gamma = \frac{K_p}{K_v}.$$

It has been shown, that $c = (K_p - K_v)$;

and, that $\gamma = \frac{K_p}{K_v}$.

$\therefore$ $K_v(\gamma - 1) = c$.

Or, $K_v = \frac{c}{\gamma - 1}$.

Hence, for air, $\gamma = \frac{K_p}{K_v} = \frac{\cdot 2375}{\cdot 1691}$

$= 1{\cdot}4$ (see p. 56, Lecture IV.).

Specific Heats of Superheated Steam.—As dry steam (*several degrees above the saturation point**) is considered to be a perfect gas, it has been found, from experiments, that the specific heat at *constant pressure*—

$C_p = 0{\cdot}48$ thermal unit,

or $K_p = C_p \times 778 = \cdot 48 \times 778$

$= 373$ foot-lbs.

Hence, for steam, $P V_s = c_s \tau$;

and, for air, $P V_a = c_a \tau$.

Or, $\frac{V_s}{V_a} = \frac{c_s}{c_a}$.

Now, the ratio of the specific volumes $\frac{V_a}{V_s} = \cdot 622$. That is, the density of perfectly dry steam gas or superheated steam

* See table on p. 57.

should be ·622 times that of air at the same pressure and temperature when calculated from its chemical composition.

$$\therefore \quad \frac{c_s}{c_a} = \frac{1}{\cdot 622},$$

and
$$c_s = \frac{c_a}{\cdot 622} = \frac{53\cdot 18}{\cdot 622}$$
$$= 85\cdot 5.$$

Then, $$(K_p - K_v) = 85\cdot 5,$$

and
$$K_v = K_p - 85\cdot 5$$
$$= 373 - 85\cdot 5$$
$$= 287\cdot 5 \text{ ft.-lbs.}$$

$\therefore$ for superheated steam, $$\gamma = \frac{K_p}{K_v} = \frac{373}{287\cdot 5} = 1\cdot 3.$$

Expansion of a Gas doing External Work.—Hitherto we have been dealing with the expansion of a gas in accordance with Boyle's law, and we have drawn the curve of expansion in Watt's diagram of work. The necessary condition for the fulfilment of Boyle's law is, that the temperature remains constant, and the curve representing expansion under this condition is an hyperbola, and is known in connection with this subject as an "*isothermal curve*," *or curve of equal temperature.* Suppose we have an ideal engine, the cylinder of which is constructed of non-conducting material, so that no heat can enter or leave the working gas during its action, and that we introduce a mass of air at a certain pressure, volume, and temperature, and allow it to do work on the piston by its expansive power; although no heat can pass through the cylinder, yet we find that the temperature of the working gas falls considerably throughout the expansion. The explanation is easy. The gas in expanding converts a quantity of its heat into actual mechanical work, and the amount of work done by our ideal engine *must* be the exact mechanical equivalent of the heat lost by the gas in the cylinder. Therefore, when a gas expands doing external work, its temperature must fall (otherwise no work could be done), and the relation between pressure and volume will not be in accordance with Boyle's law, unless heat is supplied to the substance during expansion, in proportion to the amount of work done by the gas. This is a most important point, and is one of the claims for a steam jacket, such as that

used by Watt when working steam expansively; we shall, however, have occasion to refer to this application of the principle later on. If a gas expands without doing any external work its initial and final temperatures are the same.

Adiabatic Expansion.—*Expansion doing work without gain or loss of heat from an external source (as already referred to) is termed "adiabatic" expansion,* and the curve which represents the changes of pressure and volume throughout is termed an "adiabatic" curve, to distinguish it from the isothermal curve of expansion according to Boyle's law.

Suppose we have a volume, O A, of a gas at a pressure, A *p*, and expand it at a uniform temperature, and let the changes of pressure and volume be represented by the isothermal curve, *p c*. Then, if the gas be expanded adiabatically, the changes

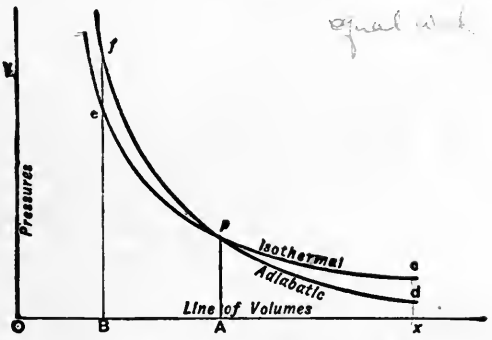

ISOTHERMAL AND ADIABATIC CURVES.

of pressure and volume will be represented by the adiabatic curve, *p d*, and it is evident that this curve must fall below the isothermal since the gas has done work. If, however, we compress the gas from the volume O A to the volume O B, we are now doing work upon it, and the equivalent of the work done upon the gas is imparted to it in the form of an additional quantity of heat. If the compression takes place at uniform temperature this additional heat must escape, and the changes of pressure and volume will be represented by the isothermal curve, *p e*. If, however, the compression takes place under the condition that no heat can escape, then the changes of pressure and volume will be represented by the adiabatic curve, *p f*, and

this curve rises above the isothermal. For, the effect is the same as if the gas had first been compressed at constant temperature and then a certain quantity of heat had been taken up by it while its volume was kept constant. Thus, we see that the adiabatic curves are more inclined to the line of volumes than the isothermals, and, therefore, to diminish the volume of a gas by a given amount, requires a greater increase of pressure when the gas is prevented from losing heat, than when it is kept at a constant temperature. We infer from this, that even in a conducting cylinder, if the compression takes place very suddenly, before the heat has time to escape, a greater pressure will be required to compress it than if the action were gradual. For a complete study of this part of the subject we would refer the student to Volume II.

Heat Engines.—We propose now to discuss an ideal or imaginary engine, for the conversion of heat into mechanical work, and shall calculate the work done by the engine.

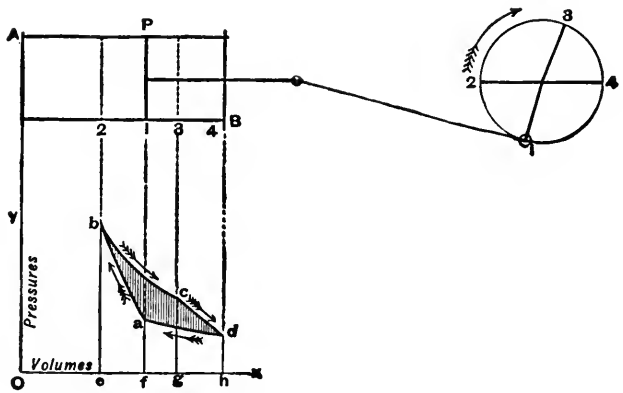

IMAGINARY HEAT ENGINE.

Let A B be the working cylinder of the heat engine, having a volume of a perfect gas, say air between the cover, A, and the piston, P. The cylinder must be constructed of non-conducting material, so as to allow of adiabatic expansion, but yet it must be capable of transmitting heat to and from the working substance at certain intervals of the stroke. We see, therefore, that these special conditions of working are contradictory, but,

as the engine is purely imaginary, we shall suppose that this difficulty has been overcome.

Starting then with the piston in position, 1, we have a volume of gas, Of (see diagram below cylinder), at a pressure, fa, and absolute temperature, τ_1. As the crank moves from position 1 to position 2 (upper diagram), the air is compressed, and, since no heat can escape, the relation between pressure and volume is represented by the adiabatic curve, $a\,b$ (lower fig.) When the piston has reached point 2, the absolute temperature of the working substance has risen to τ_2. During the movement of the piston from point 1, to point 2, work has been spent upon the working substance, and this we may call *negative* work. The working substance now forces the crank further round and begins to expand. The effect of this would be to make the temperature fall, but throughout the expansion from 2 to 3, heat is supplied to the working substance in sufficient quantity to maintain the temperature uniform, and the relation between volume and pressure is represented by the isothermal curve, $b\,c$. During this process the substance is doing work, and this we reckon as *positive*. In order to maintain this isothermal curve a quantity of heat, H, has been taken up by the working substance. When the piston arrives at point 3, the supply of heat to the working substance is stopped, and the expansion continues without gain of heat, therefore the temperature falls. The relation between the pressure and volume at this part of the stroke, is represented by the adiabatic curve, $c\,d$. When the temperature has fallen to τ_1 (the temperature from which we started) the piston will have arrived at the end of its stroke, and the work having been done *by* the substance will be reckoned *positive*. The crank is now in position 4, and on passing that point causes the piston to move back and to compress the air in the cylinder. This compression would cause a rise of temperature, but the additional heat imparted to the substance is abstracted during the compression, and the relation between pressure and volume is exhibited by the isothermal curve, $d\,a$. Since, before beginning the return stroke the working substance had the same temperature as that from which we started, therefore, when the piston arrives at point 1, the working substance has returned exactly to its original state as regards volume, pressure, and temperature. During this latter portion of the stroke work has been spent upon the substance, and must, therefore, be considered *negative*, and simultaneously a quantity of heat (say h) has been abstracted from the working substance.

Such a series of operations as this, by which the working

substance, after undergoing successive states of pressure, volume, and temperature, is finally brought back in all respects to its original state, is termed a *cycle* of operations. When the changes of state can be passed through in *either* direction, the cycle is said to be *reversible*. In the diagram of the expansion of the gas, the figure, *a b c d*, represents the cycle, for, while we started with a pressure, *a f*, volume, O*f*, and temperature, τ_1, we arrived at the close of our operations with the same pressure, volume, and temperature. The working substance is performing work on the piston while it moves from point 2, to point 4, the expansion curve being *b c d*, and the work done is represented by the area of the figure, *b c d h e*. This is positive work. Work is done upon the substance while the piston moves from point 4, to point 2, the expansion curve being *d a b*, and the work done is represented by the area of the figure, *d a b e h*. This is negative work. To find the work performed by the substance, we subtract the area, *d a b e h*, representing negative work, from the area, *b c d h e*, representing positive work, and the remainder, *a b c d*, represents the useful work performed by the substance throughout the cycle of operations.

Work done by a Heat Engine.—Our operations on this heat engine consisted in taking in a quantity of heat, H (from positions 2 to 3 of stroke), at a temperature, τ_2, and rejecting a less quantity of heat, *h* (from 4 to 1), at a lower temperature, τ_1.

Hence, the heat-energy that has been transformed into mechanical work during this cycle of operations

$$= \mathrm{H} - h \text{ thermal units.}$$

Calling W the amount of work thus given out by the engine in one revolution, we have

$$\mathrm{W} = \mathrm{J}\,(\mathrm{H} - h) \text{ foot-lbs.,}$$

$$= \mathrm{J\,H}\left(1 - \frac{h}{\mathrm{H}}\right) \text{ ,,}$$

where J is Joule's "equivalent" (see Index).

Now, in order to eliminate *h* from the above equation, and thus express the work actually done in terms of the heat supplied, together with the absolute temperatures between which the engine works, we proceed as follows:—

Let p_1 = pressure measured by *f a*,
p_2 = ,, ,, *e b*,
p_3 = ,, ,, *g c*,
p_4 = ,, ,, *h d*,

v_1, v_2, v_3, and v_4 be the corresponding volumes occupied by the gas when subjected to the above pressures respectively.

In Lecture XVII. it is shown that when a gas expands, according to Boyle's law, from a pressure and volume, p_2, v_2, to another pressure and volume, p_3, v_3, say, and does work, the value of the work done is

$$= p_2 v_2 \log_e \frac{v_3}{v_2} \text{ foot-lbs.},$$

when p_2 is in lbs. per sq. ft., and v_2 is in c. ft.

Now, since our working substance, the gas, takes in a quantity of heat, H, while expanding from a volume, v_2, to a volume, v_3, sufficient in amount to keep the temperature at the constant value, τ_2, it follows, from what has been already said about isothermal expansion, that the work done on external bodies by the gas, must be equal to the mechanical equivalent of the heat supplied; that is to say,

$$\mathrm{J\,H} = p_2 v_2 \log_e \frac{v_3}{v_2},$$

$$= c \tau_2 \log \frac{v_3}{v_2}.$$

By similar reasoning, we get

$$\mathrm{J}\,h = c \tau_1 \log_e \frac{v_4}{v_1}.$$

Substituting the values of H and h, thus obtained into the equation for the work done, we get

$$\mathrm{W} = \mathrm{J\,H} \left\{ 1 - \frac{\tau_1 \log \frac{v_4}{v_1}}{\tau_2 \log \frac{v_3}{v_2}} \right\}.$$

Since the points, a and b, are on the adiabatic curve, $a\,b$, we have the following relation between the co-ordinates of these points—

$$p_1 v_1^{\,n} = p_2 v_2^{\,n}, \quad . \quad . \quad . \quad (1).$$

n being a positive quantity, greater than unity (see Lecture XV.) Similarly, for the adiabatic curve, $c\,d$, we have

$$p_3 v_3^{\,n} = p_4 v_4^{\,n}, \quad . \quad . \quad . \quad (2).$$

Also, for the isothermal curves, $b\,c$ and $a\,d$, we have the two equations—

$$p_2 v_2 = p_3 v_3, \quad . \quad . \quad . \quad . \quad (3).$$

$$p_1 v_1 = p_4 v_4. \quad . \quad . \quad . \quad . \quad (4).$$

We have thus four equations, from which, if we eliminate the four pressures, we obtain the relation

$$\frac{v_3}{v_2} = \frac{v_4}{v_1}.$$

This enables us to simplify the expression for the work done, which now becomes

$$W = J\,H\left\{1 - \frac{\tau_1}{\tau_2}\right\}$$

$$= J\,H\left\{\frac{\tau_2 - \tau_1}{\tau_2}\right\}.$$

And the efficiency of the engine

$$= \frac{W}{J\,H} = \frac{\tau_2 - \tau_1}{\tau_2}.$$

For example, suppose that the air in our ideal engine is raised to a temperature of 400°, and, after doing work, its temperature is 32° Fah.;

Then, $\tau_2 = 400 + 460 = 860$

„ $\tau_1 = 32 + 460 = 492$

$$\text{Efficiency} = \left(\frac{\tau_2 - \tau_1}{\tau_2}\right) = \left(\frac{860 - 492}{860}\right)$$

$$= 43 \text{ per cent. nearly.}$$

We have introduced the above important equation at this point, because we wish it to be known that it is theoretically impossible to obtain a very high efficiency for a heat engine.

We shall deal fully with the thermodynamics' aspect of the subject in Vol. II.

LECTURE XIII.—QUESTIONS.

1. Having regard to the theory of heat, will you state some reasons for concluding that when steam expands in a cylinder behind a working piston, the law of expansion differs from that of Boyle?

2. Define a heat engine. State the conditions under which such an engine will give out the greatest quantity of work, and establish your statement by reasoning. A perfect heat engine receives heat at 350° F., and rejects heat at a temperature of 90° F. Find its efficiency. *Ans.* = ·32.

3. An engine uses 10 lbs. of steam per minute, the feed temperature is 60° F., the boiler temperature 300° F., and that of the condenser 104° F., what is the theoretical maximum efficiency of the engine? State Regnault's formula for the total heat of steam at a given temperature, and deduce the amount of heat which each pound of steam has received in the boiler. What horse-power would be developed if the engine worked as a perfect engine? *Ans.* ·258; 1,144·4; 69 H.P.

4. Find an expression for the efficiency of an elementary heat engine.

5. Investigate a method of ascertaining the absolute temperature which corresponds to 100° F.

6. What is meant by the adiabatic expansion of a gas? If you were required to set out approximately the curve of adiabatic expansion of steam, how would your proceed?

7. A steam engine at the mouth of a coal pit is employed to compress air to a pressure of 3 atmospheres. The air becomes heated, but is cooled down by water to a temperature of 100° F. It is then conveyed in a pipe to the bottom of the pit and to some distance along its workings, being finally caused to drive the working piston of an ordinary high-pressure engine. The air when liberated produces a freezing temperature in its neighbourhood. Apply your knowledge to explain this fact.

8. What do you understand by the term "heat engine"? Define the efficiency of a heat engine and show why it is that only a small proportion of the heat absorbed by a heat engine reappears in the form of useful work, and show also which of the sources of loss must occur even in a perfect heat engine. If an engine and boiler consume 3 lbs. of coal per hour per horse-power and the heat developed during the combustion of each lb. of coal is sufficient to convert 12½ lbs. of water at 62° F. into steam at an absolute pressure of 100 lbs. per square inch (temperature, 327·9° F.), what, under these circumstances, is the efficiency of the engine, the boiler efficiency being taken as 72 per cent.? *Ans.* 8·2 per cent.

9. What is the law connecting the pressure, volume, and absolute temperature of 1 lb. of air? Consult the printed table furnished you at the end of Text-book for the density of air. Why is the specific heat greater at constant pressure than at constant volume?

10. Steam enters a cylinder at 150 lbs. (absolute) per square inch. It is cut off at one-fourth of the stroke, and expands according to the law "$p\,v$ constant." Find the average pressure (absolute) in the forward stroke. If the back pressure is 17 lbs. (absolute) per square inch, what is the average effective pressure? If the area of the cross-section of the cylinder is 126 square inches, and the crank is 11 inches long, what work is done in one stroke? Neglecting clearance and condensation, what volume of steam enters the cylinder per stroke? If the admitted steam has a volume of 3 cubic feet to the lb., what is the weight of steam admitted per stroke?

What work is done per lb. of steam? *Ans.* Average pressure, 59·7 lbs. per square inch absolute; 9,860 ft.-lbs. per stroke.

11. Steam enters a cylinder at the absolute pressure, 120 lbs. per square inch, and expands according to the law "$p\,v$ constant." Neglect clearance and cushioning, and use the ordinary hypothetical diagram. Constant back pressure, 27 lbs. per square inch. Take the following values of the cut-off:—Half-stroke, quarter-stroke, eighth of stroke. Find in each case the effective pressure. The area of the piston is 1 square foot; stroke, 2 feet; what is the work done per stroke? What is the work done per cubic foot of steam entering the cylinder? Tabulate your answers.

12. What is the law connecting pressure, volume, and temperature of 1 lb. of air, if at 1 atmosphere and 0° C. the volume is 12·39 cubic feet? At $2\frac{1}{2}$ atmospheres and 130° C., what is its volume? It receives heat energy equivalent to 300,000 foot-pounds at constant *volume*. What are its new pressure and temperature? The specific heat of air at constant *pressure* is 0·238. *Ans.* $c = 0{\cdot}67$, $v = 7{\cdot}2$, $p = 77$, $r = 831°$ C.

LECTURE XIV.

CONTENTS.—Distribution of Steam in a Cylinder—Lap and Lead of a Valve, &c., Angle of advance of an Eccentric, Points of admission, Cut-off, Release, and Compression—Diagram of the relative positions of Crank and Piston—Zeuner's Valve Diagrams.—Questions.

Distribution of Steam in a Cylinder.—Before explaining the Indicator, and the results obtained by it in the form of Indicator Diagrams from various types of engines, it will be necessary to describe generally the action of the eccentric, slide valve, crank, connecting rod, and piston, with their relative positions, so as to understand the distribution of steam in the cylinder of an ordinary engine.

This is most graphically and easily done by aid of a large skeleton working model, in which the slide valve, piston, &c., are all shown in section in one plane.

By aid of this model (fitted with a set of slide valves having different dimensions, the means of fixing the eccentric at different angles to the crank, and of altering the link motion or the travel of the slide valve), the distribution of steam in a cylinder may be studied simultaneously by a large class.

The engine, as seen by the arrow on the crank pin circle, is going ahead or turning with the hands of a watch. The valve is moving forward and on the point of cutting off steam from the cylinder at about half-stroke, while the piston is moving back towards the after end of the cylinder, and will therefore complete the rest of the stroke under the expansion of the steam.

It will be seen from the figure that the eccentric, E, consists of a simple pulley placed eccentrically $2\frac{1}{4}$ inches to the crank shaft centre, *i.e.*, with a throw of $2\frac{1}{4}$ in. The to and fro movement of the slide valve is obtained from this eccentric through the intermediate mechanism of the eccentric strap, eccentric rod, E R, and the valve spindle, V S, while the to and fro movement of the piston, P, is obtained from the crank keyed to the crank shaft, through the intermediate mechanism of the connecting rod, C R, and the piston rod, P R. It is, therefore, clear that, in order to ascertain the effect of the slide valve in distributing steam to the cylinder, its position at any point of the piston's stroke must be studied by observing the relative positions of the eccentric and the crank.

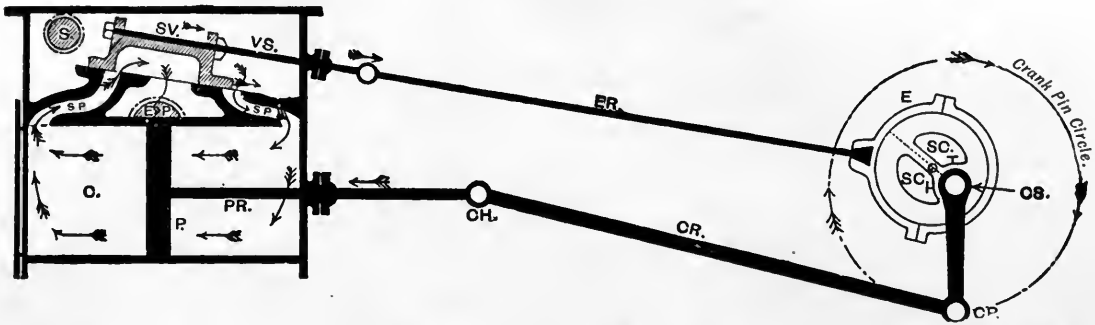

C for Cylinder.	C P for Crank pin.	S V for Slide valve.	S C for Set screw for adjusting eccentric to any angle with respect to the crank.
P ,, Piston.	C S ,, Crank shaft.	V S ,, Valve spindle.	
P R ,, Piston rod.	S ,, Steam pipe.	E R ,, Eccentric rod.	
C H ,, Cross head.	S P ,, Steam ports.	E ,, Eccentric pulley.	
C R ,, Connecting rod.	E P ,, Exhaust ,,		

Lap and Lead of a Valve, &c.—The slide valve shown in the following figure is purposely placed at the centre of its stroke, in order to facilitate an explanation of what is meant by *lap*. The valve consists of a hollow box with projecting ends, the lower face being accurately planed and fitted, so as to be steam tight on the valve port face. The hollow arch of the valve just covers the distance between the inner edges of the steam ports, so that the moment the valve cuts off the exhaust from one end of the cylinder it opens the other end of the cylinder to exhaust. Sometimes, however, slide valves have what is termed *inside lap*, that is, an inner projection at each end of the arch of the valve, marked in dotted lines by, x, in the figure. This causes the exhaust to take place later on the one side and to be cut off sooner on the other side of the piston. The effect of this is twofold—(1) a later release causing a higher back pressure, (2) compression before the end of the stroke. The latter result is useful, as we shall see in the next lecture, owing to arresting the momentum of the moving piston, piston-rod, crosshead and connecting-rod, and thus lessening what would otherwise be a sudden stress or jerk on the cross-head and crank-pin bearings, causing undue wear and tear. This is termed compression or cushioning; frequently however, part of the cushioning is effected by giving "*lead*" to the slide valve, that is, allowing it to open the steam port before the piston has come to the end of its stroke.

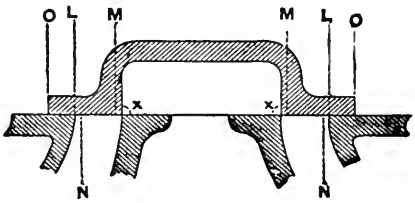

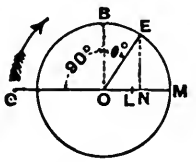

Now, looking at the left-hand figure we see the three dotted vertical lines drawn above the valve face at each end of the valve. The distance, O to L, is the amount by which the valve overlaps the steam port at each end. This is termed the *outside lap* of the valve, while the distance between L and M is the amount the valve (when at the end of its stroke) opens the steam port for admission of steam into the cylinder. This distance, L M, is frequently less than the breadth of the steam port, because the same passage serves both for inlet of the steam to, and its exit from, the cylinder; and, seeing that the steam has expanded in bulk while doing work in the cylinder, the freer and the quicker the exhaust, the less will be the back or obstructive pressure.

The vertical dotted lines drawn from, N, below the valve face near the outside edge of each steam port, indicate the *lead*.

The circle in the right-hand figure is taken to represent the path of the centre of the eccentric pulley, which works the slide valve. The radius, O M, is, therefore, equal to the arm * of the eccentric, or half the travel of the valve. Now, supposing the crank to be in the position, O C, or level at the inner dead centre in a horizontal engine (*i.e.*, the piston is just at the commencement of the outgoing stroke), mark off the distance, O N, equal to the outside lap, O L, plus the lead, L N, draw N E perpendicular to O M, and join O E; then (neglecting the obliquity of eccentric rod) we have—

O C for the Centre line of the crank.	L M for the Maximum opening to steam.
O E ,, ,, ,, eccentric.	$\theta°$ for the Angle, B O E, or the angle of advance.
O L ,, Lap.	
O N ,, Lap + lead.	

We thus see that the centre line of the eccentric must be in advance of the centre line of the crank, by $(90° + \theta°)$, where $\theta°$ is called the *angle of advance*.

If there was neither lap nor lead, then the centre line of the eccentric would be at right angles to the centre line of the crank, or the eccentric only 90° ahead of the crank.

In order to impress these various parts and positions of the slide valve, we again enumerate them as definitions.

Lap or cover of a slide valve is the amount by which the edge of the valve overlaps the adjoining edge of the steam port, when the valve is in the middle of its stroke, and is termed *outside* or *inside* lap, according as we refer to the outside or inside of valve.

Lead is the amount of the opening of the steam port at the beginning of the piston's stroke.

Angle of advance of eccentric is the angle by which the centre line of the eccentric stands in advance of that position, which would bring the valve to its mid-stroke when the crank is on the dead point; or, in other words, the angle between the crank and the centre line of the eccentric *minus* 90°.

The arm of an eccentric is the distance between the centre of crank shaft and the centre of eccentric pulley.

The travel of a slide valve is equal to the distance the valve moves to and fro in one stroke of the piston, or twice (the lap + opening to steam). It is equal to *twice the arm* of eccentric.

* Some writers use the term "throw" to denote this, but it is a confusing term, since other writers use it to indicate the travel.

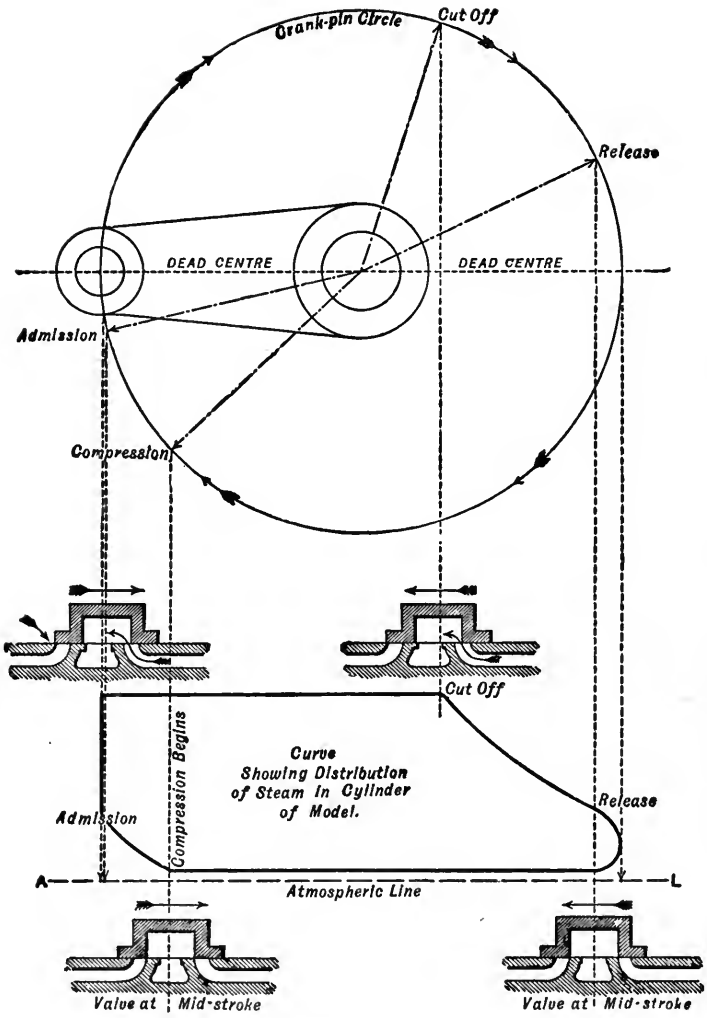

RELATIVE POSITIONS OF CRANK AND SLIDE-VALVE, WITH CURVE SHOWING THE DISTRIBUTION OF STEAM IN THE CYLINDER.

The foregoing diagram illustrates the four principal points in the motion of the simple D slide valve of the working model explained at the beginning of this lecture, p. 170, as well as the corresponding positions of the crank, and also the probable distribution of steam in the cylinder or "diagram of work."

1. The point of *admission* of steam to the cylinder.
2. The point of *cut-off* of steam from the cylinder.
3. The point of *release*, or when exhaust begins.
4. The point of *compression*, or when exhaust stops.

The diagram is self-explanatory, in as far as it shows how each of these points marked on the crank pin circle are projected on to the "diagram of work" (or piston's stroke) below, with the corresponding positions of the slide valve sketched on the lines of projections. The direction of motion of the crank and of the slide valve at each point is also made clear by arrows. It will be observed that the slide valve is at the same position with respect to the steam ports when beginning to admit steam to the cylinder and to cut off the supply of steam from the same, and that its direction of motion is in each case opposite to the direction of the piston's motion. It is also evident that the slide valve is at the middle of its stroke when release and when compression begins, and that its motion is opposite in each case to that of the piston's motion, as indicated by the straight arrows placed directly above the slide valve.

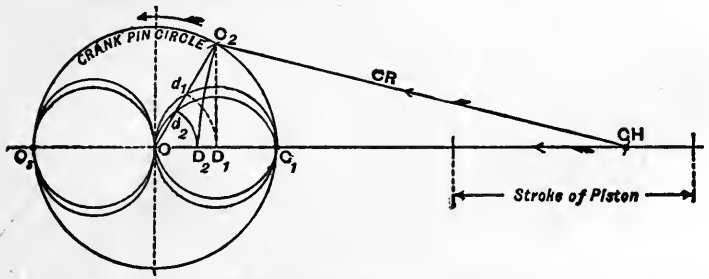

Relative Positions of the Crank and the Piston.—The following method of determining relative positions of the crank and the piston is of great importance, because it is the method used in determining the relative positions of the slide valve and its eccentric.

In the fig., let O C_2 represent the crank, then with centre, C_2, and radius (C R) = the connecting-rod, describe an arc cutting the centre line of the engine's stroke in (C H), which gives the position of the crosshead. With this point (C H) as a centre, and the

length of (C R) as radius, describe the arc, $C_2 D_2$. The length O D_2 will be equal to the distance of the piston from the *middle* of its stroke when the crank is in the position O C_2. If this distance, O D_2, be set off along the crank, O C_2, by drawing with centre, O, and radius, O D_2, the arc, $D_2 d_2$, and the same operation be repeated for a series of different positions of the crank, all these points will be found to lie on the polar curve, O d_2 C_1. Any chord of this curve drawn from the point O will be equal to the distance of the piston from the middle of its stroke when the crank lies along that chord.

The double looped curves in full lines are the curves obtained by this method.

If the connecting-rod be infinitely long it is evident that instead of the arc, $C_2 D_2$, we get the straight line, $C_2 D_1$, at right angles to the line of stroke, and that O D_1 is, in this case, the distance of the piston from the middle of its stroke. If this distance be set off along the crank by drawing the arc, $D_1 d_1$, and the same operation be repeated for a series of different positions of the crank, it will be found that all these points lie on a pair of circles drawn with O C_1 and O C_3 as diameters. These are shown by the dotted circles in the figure.

The effect of the obliquity of the connecting-rod is well seen by comparing the curves in full lines with the circles in dotted lines.

In valve diagrams it is usual to neglect the effect of the obliquity of the eccentric-rod, because the ratio of its length to the throw of the eccentric is generally great, and its effect is therefore generally not worth taking into account.

Another method of finding the relative position of the crank and the piston is as follows :—(see next fig.)

Draw two lines, $P_1 P_3$, $P_2 P_4$, at right angles to each other. From their intersection, O, with radius O C, equal to the length of the crank, describe the inner or crank pin circle. With C as a centre and C P_1 as radius equal to the length of the connecting rod, describe the circle $P_1 P_2 P_3 P_4$. With O as a centre and O P_3 as a radius, describe a circle; again, with the centre, O, and radius, O P_1, describe the large outer circle.

Now, suppose the crank to be fixed in the position, O C, and the cylinder to revolve round the centre, O, in the direction of the hands of a watch, as indicated by the arrows, then the connecting-rod (which is supposed for the purposes of explanation to be connected directly to the piston) will cause the piston to move inwards during the first half, and outwards during the second half of the revolution. The positions P_1, P_2, P_3, and P_4 represent the piston at 0°, 90°, 180°, and 270° of the revolution. For any

required angle, O C P, between the crank, O C, and the connecting-rod, C P, the position of the piston is indicated by the position, P. The radial lines between the large outer circle and the inner circle of radius, O P, indicate the distance of the piston from the outer end of the cylinder; for the path of the piston lies in the line of the circle P_1, P_2, P_3, P_4. Precisely the same

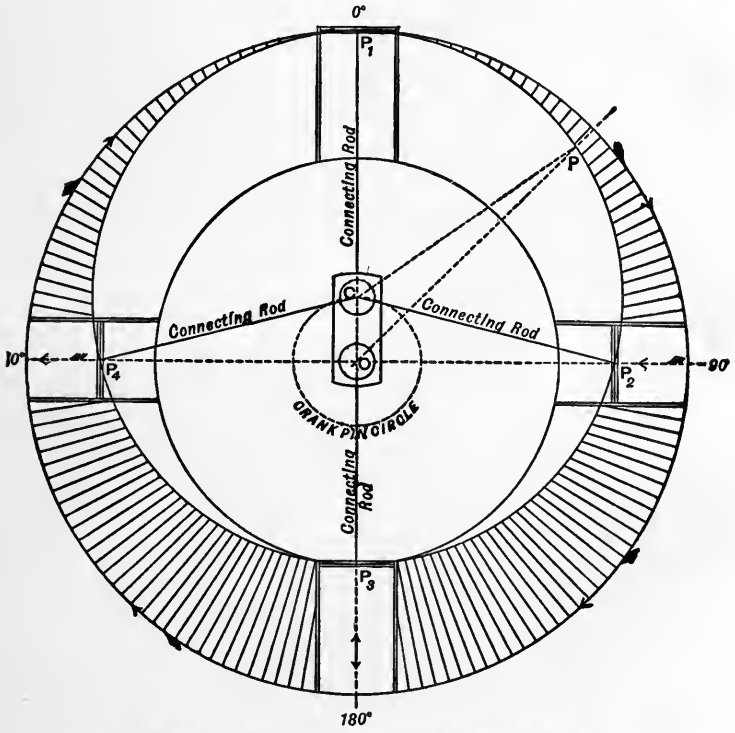

RELATIVE POSITIONS OF CRANK AND PISTON.

reasoning will hold good if we consider the crank to revolve and the cylinder to be fixed (as is usually the case) say in the position at P_1. Then the radial lengths between the outer circle and the circle P_1, P_2, P_3, P_4 respectively represent the distance of the piston from outer end of the stroke for each position of the crank during a revolution.

Cause of the Unequal Distribution of Steam during the Forward and the Back Stroke of the Piston.—If the connecting-rod of an engine was infinitely long (and therefore remained always parallel to the centre line of the piston's motion), the point of "cut off," and consequently the distribution of steam, would be equal at both ends of the cylinder; but when the length of the connecting-rod (as usually adopted in practice) is only from 2 to 4 times the length of the crank, the distance to the point of "cut off" is considerably later on the forward stroke than on the return or back stroke.

An explanation of the following two diagrams will render this quite evident.

Firstly. Consider a case when the slide valve has "outside lap" only, and no "lead."

1. Draw a centre line of the piston's motion, C_3, to 10.

2. With any convenient position, O, as a centre and radius, O C_1, equal to the length of the crank, describe a circle, $C_1C_2C_3C_4$, and let the crank revolve in the direction shown by the arrows on the crank pin circle.

3. With centre C_1, and radius equal to the length of connecting-rod (in this case = 3 cranks), describe an arc, cutting the centre line of engine in the position 10 furthest from C_1. With centre, C_3, and the same radius, describe another arc, cutting the same centre line in position 10 nearest to C_1. Then the distance, 0 to 10, is equal to the piston's stroke. This distance may be conveniently divided into ten equal parts both above and below the centre line, so as to indicate percentages of the stroke during the *forward* and *back* strokes of the piston.*

4. With centre, O, and radius equal to the throw (or eccentricity of the eccentric), describe the inner small circle M E_f E_b.

5. From O plot off a distance, O L, equal to the outside lap of the slide valve, and draw through, L, the line, E_f L E_b, at right angles to the centre line of the engine. From O, draw radial lines, O E_f A and O E_b B, cutting the crank pin circle in A and B, and join A B. Then, since the slide valve has no "lead," O E_f is the centre line of the eccentric when the crank is in the position O C_1, and the eccentric turns round from the position O E_f to the position O E_b, in the operation of moving the slide valve during opening and closing the back steam port; consequently, the crank must turn through an equal angle during

* Of course the positions 10 and 10 are in reality the centre of the cross-head at each end of the stroke in ordinary engines having a crank and connecting-rod. To include the length of the piston-rod would extend the figure beyond the limits of the page.

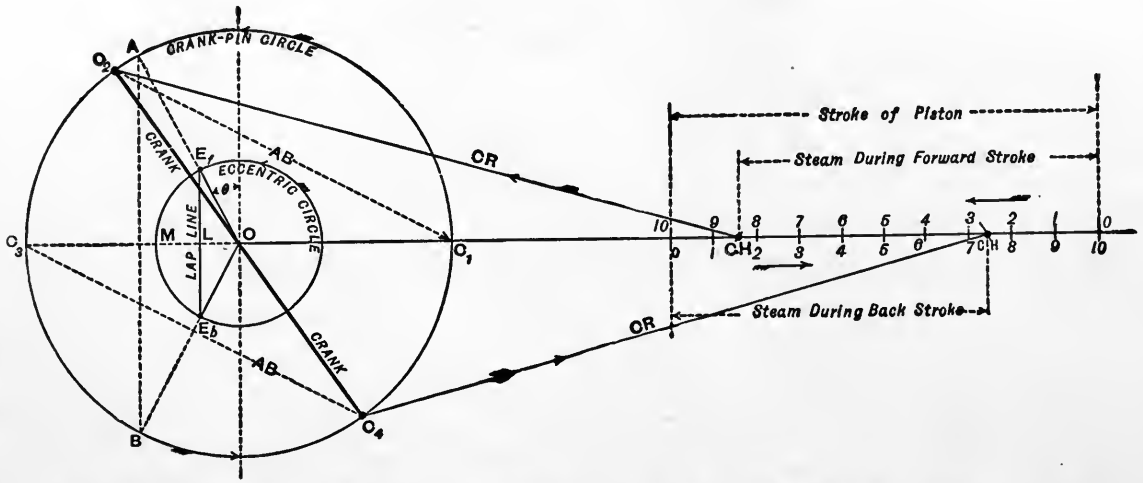

UNEQUAL DISTRIBUTION OF STEAM DURING THE FORWARD AND BACK STROKES OF THE PISTON, DUE TO THE LENGTH OF THE CONNECTING-ROD, WHEN THE SLIDE-VALVE HAS ONLY OUTSIDE LAP.

this operation, *i.e.*, an angle equal to A O B. The "angle of advance" of the eccentric is indicated by $< \theta >$.

6. With centre, C_1, and radius, A B, describe an arc, cutting the crank-pin circle in C_2, and join O and C_2 by a thick line. Then, O C_2 is the position of the crank when steam is cut off from the cylinder, *i.e.*, when the centre of the eccentric pulley is in the position E_b.

7. With C_2 as a centre and radius equal to the length of the connecting-rod, describe an arc cutting the centre line of the engine in C H (cross-head), nearly midway between positions 8 and 9, above the line, thus showing that steam is cut off at about 85 per cent. of the stroke during the forward movement of the piston and crank.

8. With C_3 as a centre and radius, A B, describe an arc, cutting the crank-pin circle in C_4, and join O and C_4 by a thick line. Then O C_4 is the position of the crank when steam is cut off from the cylinder during the back stroke of the piston.

9. With C_4 as a centre and radius equal to the length of the connecting-rod describe an arc cutting the centre line of the engine in C H, nearly midway between positions 7 and 8, below the line, thus showing that steam is cut off at about 75 per cent. of the stroke during the backward or return movement of the piston and crank.

Secondly. Consider a similar case in every respect to the last, except with "lead" as well as "outside lap" given to the slide-valve.

Perform precisely the same construction as before, with this addition, viz., that O N is equal to the lap O L, plus the lead L N; consequently, O E_a is the centre line of the eccentric when the crank is in the position O C_1, and O E_b, the centre line of the eccentric when steam is cut off during the forward stroke. The eccentric therefore turns round through the angle A O B while the crank turns from O C_1 to O C_2, and the piston moves from position O to nearly midway between 7 and 8 above the centre line of engine, as indicated by the letter C H.

On the return or back stroke the crank turns from O C_3 to O C_4, while the piston moves from O to a little beyond figure 6, below the centre line. Steam is therefore cut off at about 75 per cent. during the forward stroke, and 62 per cent. during the back stroke, as against 85 and 75 per cent. when no lead was given to the slide-valve.

Fixing Forward and Backward Eccentrics.—In large marine, locomotive, and other engines, the "forward" and back driving eccentrics are often fixed in their permanent position on the crank shaft before the crank is fitted into its bearings. The method by which their proper position is ascertained relatively

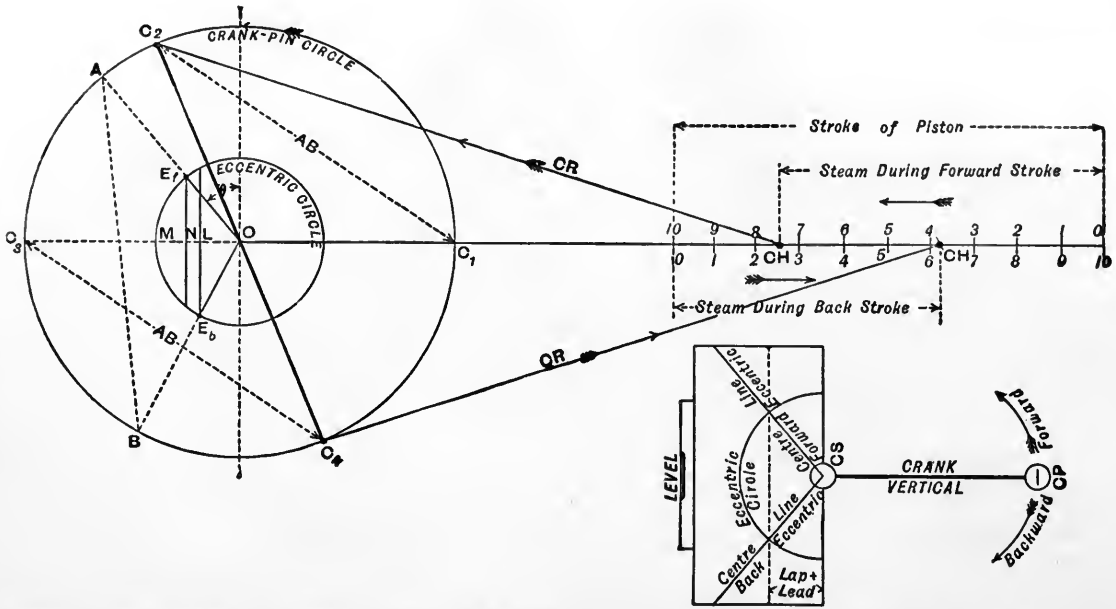

UNEQUAL DISTRIBUTION OF STEAM DURING THE FORWARD AND BACK STROKES OF THE PISTON, DUE TO THE LENGTH OF THE CONNECTING-ROD WHEN THE SLIDE-VALVE HAS LAP AND LEAD. ALSO A METHOD OF FIXING THE POSITION OF THE ECCENTRICS BEFORE FITTING AN ENGINE TOGETHER.

to their own crank will be readily understood from the foregoing diagrams and explanation, and by also considering the small figure to the left hand side of the last diagram.

Fix the crank in a vertical position, and place on the crank-shaft a wooden or sheet-iron template, with the upper edge level, having previously drawn upon it the centre lines of the "forward" and "backing" eccentrics, by the rule just described for lap and lead. Now mark on the crank-shaft with a ∧ box-square the centre lines of the feathers for fixing each of the eccentrics, and line off the outline of these feathers where they are to be sunk (parallel to the crank-shaft). Previous to placing the template on the crank-shaft, a semicircular hole has of course been cut from it to fit the crank-shaft. This handy method saves all the time, trouble, and expense of temporarily putting the crank-shaft in its bearings and fitting together the connecting-rod, piston-rod, piston, eccentric straps, eccentric rods, and slide-valve, then turning the whole engine and ascertaining by trial the best position of the eccentrics (which was quite commonly done until a few years ago), and then disconnecting the whole in order to get the feathers sunk in the crank-shaft for keying on the eccentrics in the positions that had been ascertained by trial and observation.

Zeuner's Diagram of Simple Valve Motion.—Of the problems relating to the motion of a slide-valve, the case most commonly recurring in practice, is that in which we have given the position of the crank at the point of cut-off, the travel of the valve, and the amount of lead, and have to determine the angular advance of the eccentric and the amount of outside lap required.

With centre O (see next figure) and radius equal to the throw of eccentric or half-travel of the valve, describe the circle A B C D E, and through O, draw X Y and X_1 Y_1 at right angles to each other. From O, draw O B, to represent the position of the crank when the steam is to be cut off; this is determined by means of the previous diagrams. With X as centre, and radius X V, equal to the lead of the valve, describe part of a circle, and from B, draw B F, touching this circle. Through O, draw A D at right angles to B F.

On O A* and O D, describe the valve circles A L G and H K D. These are sometimes termed the "primary" and "secondary" valve circles respectively. With O as centre, describe the circle P M N G, touching the line B F at the point N. This circle is

* The line O A would be the centre line of an eccentric for the crank in the position O Y, *and going backwards* or opposite to the direction of the arrow in the figure, while the angle $A O X_1$, or θ, would be the *angle of advance* for that eccentric.

known as the *outside lap circle*, O M being equal to the outside lap, and M L equal to the lead.

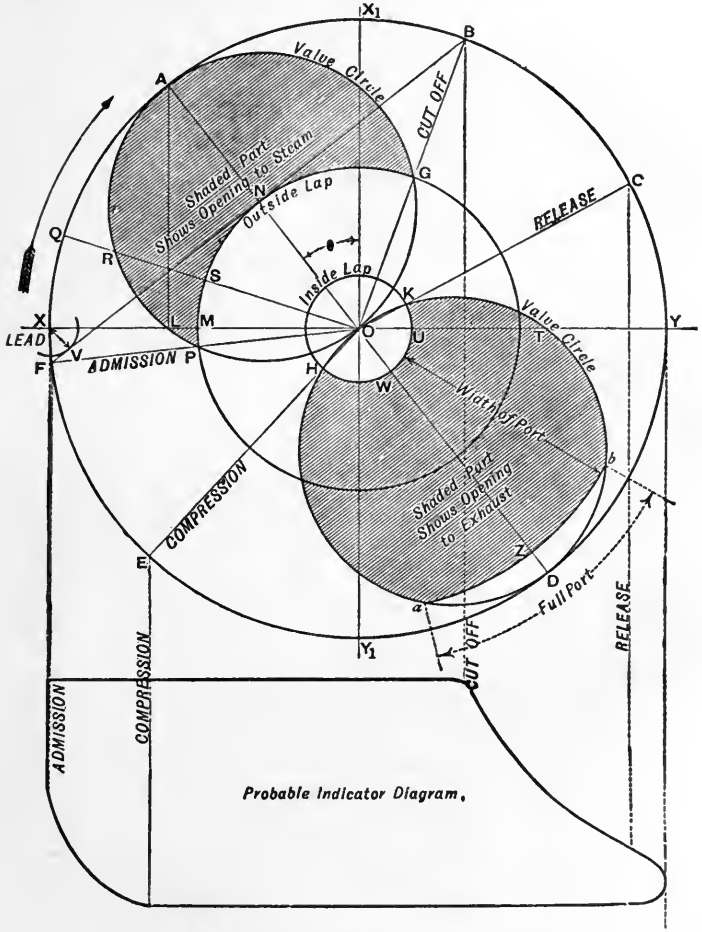

ZEUNER'S DIAGRAM OF VALVE MOTION.

If the position of the crank at the point of compression or the point of release is given, draw O E or O C to represent one of these, and where this line cuts the valve circle, H K D, describe

a circle with centre O to pass through that point. The radius of this circle gives the amount of the *inside lap*.

Having now completed our diagram, we can see the distance the valve has moved from its central position for any position of the crank, and also the opening of the port to steam at that point. Suppose the crank to be in the position O Q, and moving in the direction of the arrow, then the distance which the valve has moved from its central position is given by O R (or that portion of the line which is included within the valve circle A L G); and since the outside lap of the valve is equal to O S, therefore the opening of the port to steam is equal to R S. When the crank reaches the position O A, the port has its maximum opening equal to A N. As it passes position O A, the valve begins to close the steam port; and when it arrives at O B, the steam port is closed altogether and the steam cut off. Therefore we see that, when the crank is in the position O F, the valve is just beginning to open the steam port; and when it reaches the dead point O X, the steam port is open an amount = L M = X V = the lead of the valve, which equality is easily proved by geometry.

When the crank reaches the position O C, the valve has passed its middle position, and is distant from it on the other side an amount equal to O K; and as this is equal to the inside lap of the valve, therefore the exhaust port opens, and release takes place at this point. As the crank passes the position O C, the valve continues to open the port to exhaust. Thus, when the crank arrives at O Y, the valve has moved from its central position a distance equal to O T; and, since O U is the inside lap, therefore the port is open to exhaust an amount equal to O T – O U = U T. If W Z represents the width of the port, it is evident that, when the crank reaches the position O D, the valve has travelled beyond the port a distance equal to Z D, and, therefore, if the arc *a b* be drawn through Z, it is apparent that, during the motion of the crank from *b* to *a*, the port remains full open to exhaust. When the crank comes to the position O E the port is completely closed to exhaust; and, since the piston is not yet at the end of its stroke, compression takes place in the cylinder.

The shaded part of the upper or primary valve circle, represents the opening of the port to steam for different positions of the crank; and when the line representing the position of the crank cuts the shaded part, it indicates that the port is open to steam, by an amount equal to that portion of the line included between the two bounding curves of the shaded part. Similarly, the shaded part of the lower or secondary valve circle represents the opening of the port to exhaust, and, as we have seen, it is full open during the passage of the crank from *b* to *a*, it is not

usual to open the ports fully *to steam*, as explained at the beginning of this Lecture, hence no line corresponding to *a b* appears in the upper valve circle.

The student should work out a few examples, in order to impress the construction on his memory; for, if once the principle of the diagram is fully grasped, no difficulty will be found with any of the various problems relating to the motion of the slide valve.

For example, given *the travel, the lap, and the angle of advance*, to find the point of cut-off, the lead, etc., draw the circle, A B C D E, to represent the travel, as before; also the outside lap circle, P M N G, and making the angle θ equal to the given angle of advance, draw A D to represent the centre line of the valve circles. Describe the valve circles as before; then we see that when the crank is in the position O X, the valve is open an amount equal to L M, therefore L M is the lead of the valve. Through the point G, where the valve circle cuts the lap circle, draw O B, then O B is the position of the crank at the point of cut-off.

Or, suppose we are given *the travel, the lap, and the lead*, and are required to construct the diagram and to find the angle of advance and the point of cut-off. Having drawn the circle, A B C D E, representing the travel, lay off O M equal to the lap, and M L equal to the lead of the valve. From L, draw L A perpendicular to X Y; then the angle, A O X_1, is the angle of advance, viz., θ, required. With centre, O, and radius, O M, describe the outside lap circle, and on A O describe the valve circle as before. These circles intersect in G. Through G draw O B, then O B is the position of the crank at the point of cut-off.

Under the diagram of the valve motion we have given the probable indicator diagram, showing the admission, cut-off, release, and compression, taking place at the proper points of the stroke.

Formulæ for Ordinary Slide Valves.—In the remaining portion of this Lecture we purpose finding algebraical expressions for the more important relations connecting the various quantities in the ordinary slide valve. We have already shown how, on obtaining sufficient data, these quantities can be readily found by means of a Zeuner's valve diagram. This latter method, although very instructive and accurate, requires the use of a drawing board and drawing instruments. These are not always at hand; hence, for the benefit of those engineers and students who can manipulate simple algebraical and trigonometrical formulæ, we shall deduce by mathematics the more important relations connecting together the "lap," "lead," "travel of valve," "cut off," &c.

In what follows :—

Let T represent the travel of valve in inches.

„ L_o „ "outside lap" „

„ L_i „ "inside lap" „

„ l_o „ "outside lead" „

„ l_i „ "inside lead" „

„ S „ stroke of piston in feet.

„ x „ distance from beginning of stroke to point of cut off in feet.

„ θ = angle of advance of eccentric.

„ λ = angle of lead—*i.e.*, angle which centre line of crank makes with centre line of engine when steam is just being admitted to cylinder.

„ ω_s = angle that crank moves through from beginning of stroke to point of cut off.

„ ω_r = angle that crank moves through from beginning of stroke to point of release of steam.

„ ω_c = angle that crank moves through from beginning of stroke to point where compression begins.

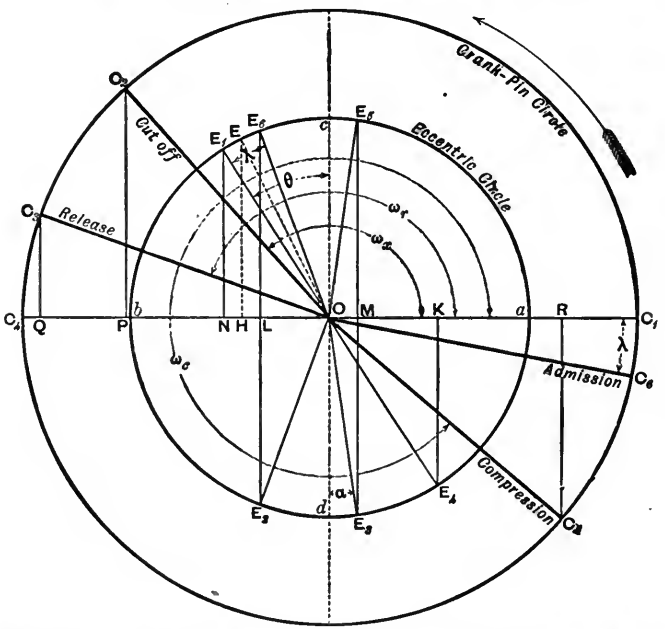

Referring to the figure where the larger circle, $C_1\,C_2\,C_5$, represents the crank pin circle, and the smaller circle, $a\,c\,b\,d$, the eccentric circle exaggerated, $a\,b = T$, $O\,L = L_o$, $L\,N = l_o$.

$$\angle\, c\,O\,E_1 = \theta, \quad \angle\, E_1\,O\,E_6 = \angle\, C_1\,O\,C_6 = \lambda.$$

Now, we have already seen, in this lecture, that E_1 is the position of the centre of the eccentric when the piston is at the beginning of its stroke, and E_2 is the position of the centre of the eccentric when the steam is cut off. Let C_2 be the position of crank pin when cut off takes place, then—

$$\angle E_1 O E_2 = \angle C_1 O C_2 = \omega_x.$$

$$\text{Also } \angle c O E_1 + \angle E_1 O E_2 + \angle E_2 O d = 180°;$$

$$\text{But } \angle E_2 O d = \angle c O E_6 = \theta - \lambda,$$

$$\therefore \theta + \omega_x + \theta - \lambda = 180°,$$

$$\therefore 2\theta + \omega_x - \lambda = 180° \quad . \quad . \quad . \quad . \quad (1).$$

$$\text{Now } \frac{O N}{O E_1} = \cos \angle E_1 O N = \sin \angle c O E_1 = \sin \theta,$$

$$\therefore \frac{L_o + l_o}{\frac{1}{2} T} = \sin \theta, \text{ i.e., } \frac{2(L_o + l_o)}{T} = \sin \theta, \quad . \quad (2).$$

$$\text{Similarly } \frac{O L}{O E_6} = \sin (\theta - \lambda), \therefore \frac{2 L_o}{T} = \sin (\theta - \lambda), \quad . \quad (3).$$

But, from equation (1) we get—

$$\theta - \lambda = 180° - (\theta + \omega_x), \therefore \sin (\theta - \lambda) = \sin (\theta + \omega_x).$$

Substituting this in equation (3) we have—

$$\frac{2 L_o}{T} = \sin (\theta + \omega_x), \quad . \quad . \quad . \quad . \quad (4).$$

When the steam is released let the crank be in the position $O C_3$, then $\angle C_1 O C_3 = \omega_r$.

First, suppose the valve to have *no* "inside lap." In this case the steam will be released when the valve is passing its middle position on its return stroke, *i.e.*, when the centre of the eccentric is at *d*.

$$\therefore \omega_r = \angle C_1 O C_3 = \angle E_1 O d = 180° - \theta, \quad . \quad . \quad (5).$$

Next, suppose the valve to have "inside lap" = L_4. The release will then be delayed until the valve has moved past its middle position a distance = L_4. From O set off a distance, O M, along $O a = L_4$, and from M draw $M E_3 \perp O a$, meeting the eccentric circle in E_3. Then E_3 is the position of the centre of the eccentric when release takes place.

$$\text{Hence } \omega_r = \angle C_1 O C_3 = \angle E_1 O E_3 = \angle E_1 O d + \angle d O E_3 = 180° - \theta + \alpha,$$

$$\text{where } \alpha = \angle d O E_3 \therefore \alpha = \omega_r + \theta - 180°, \quad . \quad . \quad (6).$$

$$\text{Now } \frac{O M}{O E_3} = \cos \angle E_3 O M = \sin \alpha,$$

$$\therefore \frac{L_4}{\frac{1}{2} T} = \sin (\omega_r + \theta - 180°), \text{ or } \frac{2 L_4}{T} = -\sin (\omega_r + \theta), \quad . \quad (7).$$

The "inside lead," or the amount the port is open for exhaust when the piston is at the end of its stroke, is shown on the valve diagram, p. 183, by the line U T. To find the position of the centre of the eccentric when the piston is at the end of its stroke. Produce $E_1 O$ to meet the eccentric circle again in E_4, then E_4 is the required position. From E_4 drop the perpendicular $E_4 K$ on the line $O a$. Then "inside lead"

$$= l_4 = O K - O M = \tfrac{1}{2} T \sin \angle d O E_4 - L_4 = \tfrac{1}{2} T \sin \theta - L_4$$

$$\therefore \frac{2 (L_4 + l_4)}{T} = \sin \theta, \quad . \quad . \quad . \quad . \quad (8).$$

From equations (2) and (8) we see that

$$L_o + l_o = L_i + l_i \quad . \quad . \quad . \quad . \quad (9),$$

which is also evident from the valve diagram, p. 183.

Next, let us find the position, $O C_5$, of the crank when compression begins. If the valve had *no* "inside lap," then compression would take place when the valve was in its middle position and moving in the opposite direction to that of the piston. Hence compression would take place on the return stroke when the centre of the eccentric was at *c*. It is, therefore, evident that the crank would then make an angle, θ, with the centre line of engine—*i.e.*, when there is *no* "inside lap"

$$\angle C_1 O C_5 = \theta.$$

If, however, the valve has "inside lap," then compression will begin *before* the valve comes to its middle position. Produce $E_3 M$ to meet the eccentric circle again in E_5, then E_5 is the position of the centre of the eccentric when compression begins.

$$\therefore \angle C_1 O C_5 = \angle E_1 O E_5 = \theta + \alpha,$$

$$\therefore \omega_c = 360° - (\theta + \alpha), \quad . \quad . \quad . \quad . \quad (10).$$

Let us now find a general formula connecting together the "lap," "lead," "travel of valve," length of stroke of piston, and distance to point of cut off.

From C_2, the point of cut off, drop the perpendicular $C_2 P$ on $C_1 C_4$. Then (neglecting the obliquity of the connecting rod)—

$$C_1 P = x, \quad O P = C_1 P - O C_1 = x - \tfrac{1}{2} S,$$

$$\text{and } \frac{O P}{O C_2} = \cos \angle C_2 O C_4 = \cos (180° - \omega_x) = - \cos \omega_x.$$

$$\therefore \frac{x - \frac{1}{2} S}{\frac{1}{2} S} = - \cos \omega_x, \text{ or } \cos \omega_x = \frac{S - 2x}{S} \quad . \quad . \quad . \quad . \quad (11).$$

$$\text{But } \cos \omega_x = 1 - 2 \sin^2 \frac{\omega_x}{2}, \quad \therefore \sin^2 \frac{\omega_x}{2} = \frac{1 - \cos \omega_x}{2} = \frac{x}{S} . \quad (12).$$

In a similar way, if y = distance from beginning of stroke to point of release, we can show that—

$$\sin^2 \frac{\omega_r}{2} = \frac{y}{S} \quad . \quad . \quad . \quad . \quad (13).$$

From equation (1) we get—

$$\frac{\omega_x}{2} = 90° - \theta + \frac{\lambda}{2}, \quad \therefore \cos \frac{\omega_x}{2} = \sin \left(\theta - \frac{\lambda}{2} \right),$$

and from equation (12), we get—

$$\frac{x}{S} = 1 - \cos^2 \frac{\omega_x}{2} = 1 - \sin^2 \left(\theta - \frac{\lambda}{2} \right).$$

Now, bisect $\angle E_1 O E_6$ by the line O E, and from E draw $E H \perp C_1 C_4$; then $\angle c O E = \theta - \frac{\lambda}{2}$.

Since $\frac{\lambda}{2}$ must be a very small angle, the perpendicular, E H, will almost exactly bisect L N. $\therefore O H = L_o +$ &c.

Now, $\sin\left(\theta - \frac{\lambda}{2}\right) = \sin \angle cOE = \cos \angle EOH = \frac{OH}{OE} = \frac{L_o + \frac{1}{2}l_o}{\frac{1}{2}T}$

$= \frac{2L_o + l_o}{T}$.

$$\therefore \frac{x}{S} = 1 - \sin^2\left(\theta - \frac{\lambda}{2}\right) = 1 - \left(\frac{2L_o + l_o}{T}\right)^2,$$

$$\therefore x = S\left\{1 - \left(\frac{2L_o + l_o}{T}\right)^2\right\} \quad . \quad . \quad . \quad (14).$$

We shall now apply the results we have arrived at to the solution of one or two examples. To enable us to solve these examples we must have recourse to a table of natural sines, cosines, &c., which will be found in books on logarithms and most pocket-books of formulæ, or at the end of this Text-book. We may here collect together the results we have arrived at for the sake of reference.

$$2\theta + \omega_x - \lambda = 180°, \quad . \quad . \quad . \quad . \quad . \quad . \quad (1).$$

$$\frac{2(L_o + l_o)}{T} = \sin\theta, \quad . \quad . \quad . \quad . \quad . \quad . \quad (2).$$

$$\frac{2L_o}{T} = \sin(\theta - \lambda), \quad . \quad . \quad . \quad . \quad . \quad (3).$$

$$= \sin(\theta + \omega_x), \quad . \quad . \quad . \quad . \quad . \quad (4).$$

$$\omega_r = 180° - \theta \quad \text{(no "inside lap")}, \quad . \quad (5).$$

$$= 180° - (\theta - \alpha) \quad \text{(with "inside lap")}, \quad (6).$$

$$\frac{2L_i}{T} = \sin\alpha = -\sin(\theta + \omega_r), \quad . \quad . \quad . \quad (7).$$

$$\frac{2(L_i + l_i)}{T} = \sin\theta, \quad . \quad . \quad . \quad . \quad . \quad . \quad (8).$$

$$L_o + l_o = L_i + l_i \quad . \quad . \quad . \quad . \quad . \quad . \quad . \quad (9).$$

$$\omega_o = 360° - (\theta + \alpha), \quad . \quad . \quad . \quad . \quad (10).$$

$$\cos\omega_x = \frac{S - 2x}{S}, \quad . \quad . \quad . \quad . \quad . \quad . \quad (11).$$

$$\sin\frac{\omega_x}{2} = \sqrt{\frac{x}{S}}, \quad . \quad . \quad . \quad . \quad . \quad . \quad (12).$$

$$\sin\frac{\omega_r}{2} = \sqrt{\frac{y}{S}}, \quad . \quad . \quad . \quad . \quad . \quad . \quad (13).$$

$$x = S\left\{1 - \left(\frac{2L_o + l_o}{T}\right)^2\right\}, \quad . \quad . \quad . \quad (14).$$

N.B.—In using the above formulæ it must be remembered that the obliquity of the connecting-rod and eccentric-rod are not taken into account.

Example 1.—Given "travel of valve" = 5 ins., "outside lap" = $\frac{3}{4}$ in., "inside lap" = $\frac{1}{4}$ in., "angle of advance" = 20°. Find position of the crank (a) at admission, (b) at cut off, (c) at release, and (d) at compression

Here T = 5 ins., $L_o = \frac{3}{4}$ in., $L_i = \frac{1}{4}$ in., $\theta = 20°$.

(a) *To find position of crank at admission.*

From equation (3) we get—

$$\sin(\theta - \lambda) = \frac{2L_o}{T} = \frac{2 \times \frac{3}{4}}{5} = .3.$$

Referring to a table of natural sines we see that ·3 is the sine of an angle of 17° 28′,

$\therefore \sin(\theta - \lambda) = \sin 17° 28'$; or $\theta - \lambda = 17° 28'$, and $\lambda = 20° - 17° 28' = 2° 32'$, *i.e.*, the crank makes an angle of 2° 32′ with centre line of engine when steam is admitted.

(b) *To find position of crank at cut off.* From equation (1) we get

$$\omega_x = 180° - 2\theta + \lambda = 180° - 40° + 2° 32' = 142° 32'.$$

(c) *To find position of crank when steam is released.* From equation (7) we get

$$\sin(\theta + \omega_r) = -\frac{2 L_l}{T} = -\frac{2 \times \frac{1}{4}}{5} = -\cdot 1333.$$

Now the angle whose sine is − ·13 must either be − 7° 40′ or 180° + 7° 40′ = 187° 40′. But $\theta + \omega_r$ cannot be negative, therefore we must take the other value.

$$\therefore \theta + \omega_r = 187° 40', \text{ and } \omega_r = 167° 40'.$$

(d) *To find position of crank when compression takes place.* From equation (10) we get

$$\omega_c = 360° - (\theta + \alpha);$$

and from equation (6) we get

$$\alpha = \omega_r + \theta - 180° = 167° 40' + 20° - 180° = 7° 40'.$$

Substituting this in the last equation, we get

$$\omega_c = 360° - 20° - 7° 40' = 332° 20',$$

or compression takes place when the crank makes an angle of 27° 40′ with centre line of engine.

Example 2.—Given the "outside lap" = $1\frac{1}{8}$ in., "inside lap" = $\frac{1}{4}$ in., "outside lead" = $\frac{1}{8}$ in. Length of stroke of engine = 4 ft., cut off at $\frac{5}{8}$ of stroke. Find (*a*) the "travel of the valve," (*b*) the "angle of advance," (*c*) "inside lead," (*d*) distance to point of release, (*e*) distance from beginning of stroke when compression begins.

Here $L_o = 1\frac{1}{8}$ in., $L_l = \frac{1}{4}$ in., $l_o = \frac{1}{8}$ in., S = 4 ft., $x = \frac{5}{8} \times 4 = 2\frac{1}{2}$ ft.

(a) *To find the "travel of the valve."* From equation (14) we get—

$$x = S\left\{1 - \left(\frac{2 L_o + l_o}{T}\right)^2\right\},$$

$$\therefore 2\tfrac{1}{2} = 4\left\{1 - \left(\frac{2 \times 1\frac{1}{8} + \frac{1}{8}}{T}\right)^2\right\},$$

$$\therefore T = \frac{25}{\sqrt{24}} = 5{\cdot}1 \text{ ins.}$$

(b) *To find "angle of advance."* From equation (2) we get—

$$\sin\theta = \frac{2(L_o + l_o)}{T},$$

$$= \frac{2(1\frac{1}{8} + \frac{1}{8})}{5{\cdot}1},$$

$$= \cdot 6372,$$

$$\therefore \theta = 39° 35'.$$

(c) *To find the "inside lead."* From equation (9) we get—

$$L_i + l_i = L_e + l_e,$$

$$\therefore\ l_i = L_e - L_i + l_e = 1\tfrac{1}{8}'' - \tfrac{1}{4}'' + \tfrac{1}{8}'' = 1\tfrac{1}{8}''.$$

(d) *To find distance to point of release from beginning of stroke.* From equation (13) we get—

$$\frac{y}{S} = \sin^2 \frac{\omega_r}{2} = \frac{1 - \cos \omega_r}{2}.$$

Also, from equation (7) we have—

$$\sin(\theta + \omega_r) = -\frac{2L_i}{T} = -\frac{2 \times \frac{1}{4}}{5{\cdot}1} = -{\cdot}098 = \sin 185°\ 38'.$$

$$\therefore\ \omega_r = 185°\ 38' - 39°\ 35' = 146°\ 3'.$$

$$\therefore\ \cos \omega_r = -\cos(180° - 146°\ 3') = -\cos 34° \text{ nearly} = -{\cdot}829.$$

$$\therefore\ y = 4 \times \frac{1 + {\cdot}829}{2} = 3{\cdot}66 \text{ ft.}$$

(e) *To find distance of piston from beginning of stroke when compression begins.* Referring to our figure (p. 186), draw $C_5 R \perp O C_1$. Then $C_1 R$ is the required distance.

Now, $C_1 R = O C_1 - O R = \frac{1}{2} S - \frac{1}{2} S \cos \angle C_1 O C_5 = \frac{1}{2} S \{1 - \cos(\theta + \alpha)\}$.

And $\alpha = \omega_r + \theta - 180°$ . . . . . equation (6).

$$\therefore\ \theta + \alpha = \omega_r + 2\theta - 180° = 146° + 79°\ 10' - 180°, \text{ by (b) and (d)},$$

$$= 45°\ 10'.$$

$$\therefore\ C_1 R = \tfrac{1}{2} S \{1 - \cos 45°\ 10'\} = 2 \{1 - {\cdot}705\} \text{ ft.} = {\cdot}59 \text{ ft.}$$

Example 3.—In a steam engine the cut off takes place at ·7 of the stroke, the angle of lead is 6° 9′, the width of the steam port is $1\frac{1}{4}$ ins., and the steam port opens $\frac{17}{24}$ of its area. Find by Zeuner's diagram (neglecting obliquity) the travel of the slide, the angle of advance, the outside lap, and the outside lead. What would be the amount of inside lap necessary to produce cushioning after $\frac{6}{7}$ of the stroke has been performed? (S. and A. Hon. Exam., 1888)—cos 66° 25′ = ·4 ; cos 59° 52′ = ·502.

This question is evidently intended to be solved partly by calculation. In an examination tables are now allowed to be used, and therefore it will be interesting to solve, with the data given, how this question may be answered.

Draw the two axes, $X O Y$, $X_1 O Y_1$, at right angles to each other. With O as centre describe *any* circle $x\ b\ y$. Divide $x\ y$ into ten equal parts. From the seventh point of division, measured from x, draw $7\ b \perp x\ y$, meeting the circle in b. Join $O\ b$ and produce it. The line $O\ b$ represents the position of the crank when steam is cut off. From O draw $O f$ below $O X$, making $\angle X O f = \lambda = 6°\ 9' =$ angle of lead. Bisect $\angle f O b$ by the line $O\ a$. Then $\angle a O X_1 = \theta =$ angle of advance. This is about all the length we can go with the construction in the meantime. We may, however, take our protractor and measure the angles θ and ω ($= \angle a O b$).

We must now try and find either the outside lap or the travel of the valve. Since the width of the steam port is $1\frac{1}{4}$ ins., and the maximum opening to

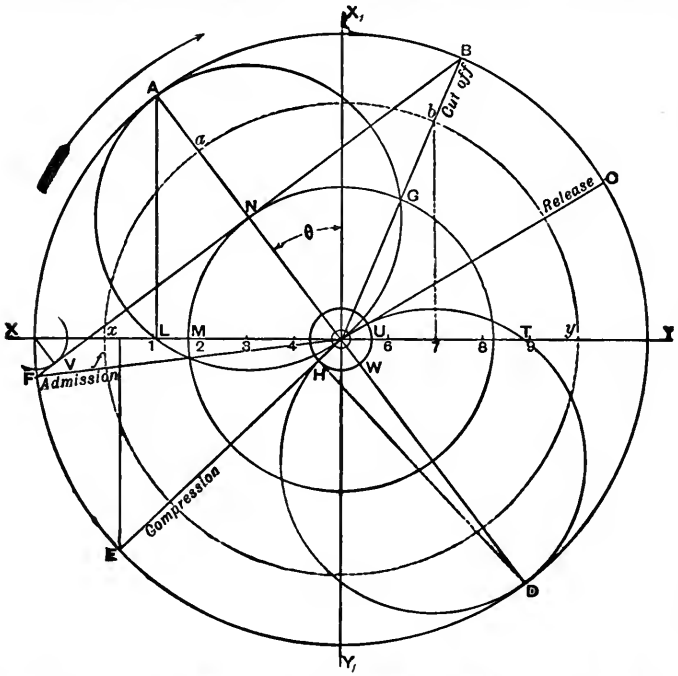

steam is $\frac{1}{2}\frac{7}{4}$ of the area of the port, then it follows that the maximum opening for steam $= \frac{1}{2}\frac{7}{4} \times 1\frac{1}{4} = 1\frac{7}{16}$ ins. Now, we have seen, p. 173, that—

$$T = 2\,(L_o + \text{max. opening for steam}),$$
$$= 2\,(L_o + k),$$

where k = max. opening for steam $= 1\frac{7}{16}$ ins.

$$\therefore \frac{2\,L_o}{T} = 1 - \frac{2\,k}{T}, \quad . \quad . \quad . \quad . \quad . \quad (\alpha).$$

But $\frac{2\,L_o}{T} = \sin(\theta + \omega_x)$, equation (6), and $\theta = 90° - \frac{\omega_x - \lambda}{2}$, equation (1).

$$\therefore \frac{2\,L_o}{T} = \sin\left(90° + \frac{\omega_x + \lambda}{2}\right) = \cos\frac{\omega_x + \lambda}{2}.$$

Substituting this in (α), we get

$$\cos\frac{\omega_x + \lambda}{2} = 1 - \frac{2\,k}{T}, \quad . \quad . \quad . \quad . \quad (\beta).$$

Now we know that $\lambda = 6° 9'$, and we can now proceed to find ω_x. From equation (11), we have

$$\cos \omega_x = \frac{S - 2x}{S} = \frac{1 - 2 \times \cdot 7}{1} = - \cdot 4.$$

Hence from data given in the question, we see that

$$\omega_x = 180° - 66° 25' = 113° 35';$$

$$\therefore \cos \frac{\omega_x + \lambda}{2} = \cos \frac{113° 35' + 6° 9'}{2} = \cos 59° 52' = \cdot 502,$$

as given in question.

Substituting this in (β), we get

$$\cdot 502 = 1 - \frac{2k}{T} \therefore T = \frac{2k}{\cdot 498} = \frac{2 \times 1\frac{1}{16}}{\cdot 498} = 4 \cdot 26 \text{ ins.}$$

With centre O, and radius = 2·13 ins., describe circle X Y_1 Y, cutting O *f*, O *b*, and O *a* in F, B, and A. Join F B, cutting O A at right angles at N; then O N is the outside lap. With centre, X, describe an arc of a circle tangent to F B; then the radius, X Y, of this circle is the outside lead; or the outside lead may be got from M L. To find the amount of inside lap necessary to produce cushioning after $\frac{4}{7}$ of the stroke has been performed. Divide X Y into 7 equal parts, and from the first point of division next X, draw the perpendicular downward to meet the circle in E. Join O E. Then O E is the position of the crank when compression begins. Let E cut the valve circle, O D, in H. With centre, O, and radius, O H, describe the circle, H W U. The radius of this circle gives the inside lap. Since E H cuts the circle, O D, at a very small angle, it may be difficult to find the exact point, H, of intersection. This, however, can be easily overcome, remembering that the angle in a semicircle is a right angle. From D, draw D H $\perp$ E O, the point of intersection, H, is the required point.

LECTURE XIV.—QUESTIONS.

1. Sketch an eccentric and describe the several parts. What is the throw of an eccentric? Upon what does the amount of throw depend? What is the angle of advance?

2. What is the lap of a slide valve? Draw a section of a simple slide valve and ports, showing the valve (1) without lap, (2) with lap. For what purpose is "lap" given to a slide valve?

3. What effect is produced by putting lap on a slide valve? The lap on the steam side of a slide valve is $1\frac{1}{8}$ inches, that on the exhaust side is $\frac{1}{4}$ inch, and the lead is $\frac{1}{4}$ inch. Find the opening for exhaust which the valve gives at the lower port when the piston is at the top of its stroke. *Ans.* $1\frac{3}{8}$ inch.

4. Make a diagram showing a crank going backward, or opposite to the hands of a watch, and mark on the crank circle the points of admission, cut-off, release, and compression. Draw the probable curve of pressures underneath of a non-condensing engine showing the atmospheric line.

5. In a direct-acting horizontal engine the lengths of the crank and connecting-rod are 1 and 5 feet respectively. How far is the piston from the middle of its stroke when the crank is vertical? *Ans.* 1·23 inch.

6. Taking a direct-acting engine, and disregarding the effect of obliquity of the connecting rod, you are required to assign the proportion of lap to travel of slide valve, in order to cut off steam at $\frac{3}{4}$ of the stroke. *Ans.* $\frac{1}{4}$

7. Given that the travel of a slide valve is 5 inches, outside or steam lap $\frac{3}{4}$ inch, and the angle of advance $22\frac{1}{2}°$, find graphically the position of the crank at the point of cut-off. *Ans.* 140° from dead centre line.

8. In a direct-acting non-condensing engine let the crank be on the back dead centre. Sketch the slide valve and ports, marking the lap and lead. What is the object of putting inside lap to valve?

9. The stroke of the piston in a direct-acting engine is 4 feet, and the length of the connecting rod is 9 feet. How far is the piston from the middle of its stroke when the crank has made $\frac{1}{4}$ of a revolution from a dead point? *Ans.* 2·7 inches.

10. Travel of valve = $8\frac{3}{4}$ ins. Outside lap = $2\frac{1}{4}$,, Inside lap = $\frac{1}{4}$,, Angle of advance = 35°.

Ans. $\lambda = 4° 3'$. $\omega_x = 114° 3'$. $\omega_r = 148° 16'$. $\omega_c = 28° 16'$. $l_o = .26$ in.

Find the points of admission, cut-off, release, and compression, and the amount of lead by a Zeuner's diagram.

11. Given—

Outside lap = $1\frac{1}{4}$ inch. Maximum opening for steam = $1\frac{1}{4}$,, Cut-off at $\frac{7}{10}$ of the stroke.

Ans. T = 5 ins. $l_o = .25$,, $\theta = 37°$.

Determine the travel of valve, lead, and the angle of advance.

12. Given.

Travel of the valve = $4\frac{1}{2}$ inches. Outside lap = 1 ,, Inside lap = $\frac{1}{4}$,, Angle of advance = 30°

Ans. $3° 36\frac{3}{4}'$; $56° 23\frac{1}{4}'$; $23° 37\frac{1}{4}'$; $36° 22\frac{3}{4}'$. These angles are measured from the dead centres line.

Find the positions of the crank at admission, cut-off, release, and compression, also the lead of the valve.

13. A horizontal engine is constructed with a three-ported or locomotive slide valve and single eccentric for cutting off the steam at half-stroke. In what respects would you alter the working parts in order to cut off steam at three-quarters of a stroke? Explain by sketches the alterations which are necessary

14. In a direct-acting engine, set out by a diagram the relative positions of the piston and crank during a stroke, on the supposition that the connecting-rod is of infinite length or remains parallel to itself. How is this diagram altered when a definite length is assigned to the connecting-rod? *Ans.* 17·4 inches from beginning of stroke.

15. The crank of an engine is 3 feet 6 inches, and the connecting-rod 9 feet long. Find the angle which the crank makes with the vertical when the piston is at half-stroke. *Ans.* 11° 12′ 44″.

16. Explain the effects produced by putting *outside* and *inside* lap respectively upon the slide valve of an engine. The outside lap is $1\frac{3}{4}$ inches, the lead is $\frac{1}{8}$ inch, and the greatest opening for steam is $1\frac{1}{2}$ inches, what is the travel of the valve, and how far is the valve from its middle position when the piston is just beginning its stroke? *Ans.* $6\frac{1}{4}$ ins.; $1\frac{7}{8}$ ins.

17. The length of crank is 14 inches, the slide-valve has half-travel of $2\frac{1}{2}$ inches, its lap is $1\frac{1}{2}$ inches, and its lead $\frac{1}{8}$ inch. At what distance from the end of the stroke will the piston be when the steam is cut off, if the angularity of the connecting-rod is neglected? Prove that the Zeuner diagram gives correct answers when the motions are simple harmonic.

18. A link motion works a slide-valve; outside lap, 0·5 inch. By shifting the gear we get the following:—

Half-travel, . . .	2·50″	2·10″	1·70″	1·52″
Angle of advance, .	30°	40°	51°	69°

Find in each case the positions of the crank at *admission*, *cut-off*, *release*, and *compression*, and sketch the hypothetical indicator diagrams, taking any initial and back pressures you please. Neglect the angularity of the connecting-rod.

19. Prove the correctness of the Zeuner valve diagram. A valve has an outside lap 1 inch, inside lap 0·3 inch. It is worked by a gear giving, in two positions, the following values of the half travel and advance:—

Half-travel, ...	3·12″	2·12″
Advance, ...	30°	51°

If the connecting-rod is five times the length of the crank, find the points of cut-off for both ends of the cylinder in both cases. What sort of gear might give the above conditions?

20. Steam is admitted to the cylinder of a double-acting engine at 80 lbs. per square inch. The back pressure is 17 lbs. per square inch. The friction of the engine may be taken to be represented by a back pressure of 8 lbs. per square inch on the piston. Find the cut-off to give maximum actual work per cubic foot of steam, taking "pv constant" as the law of expansion. Neglect clearance, cushioning, and condensation. If you use a formula for the average pressure, prove it correct.

21. Show the position of a slide-valve at the beginning of the stroke of an engine. A slide-valve has half-travel 2·10 inches, advance 40°, lap

1 inch, inside lap 0·3 inch, draw a passible indicator diagram. Prove your valve diagram to be correct.

22. The stroke of a slide valve is $3\frac{1}{4}$ inches, the outside lap is $\frac{3}{4}$ inch, and the inside lap is $\frac{1}{8}$ inch. Find the maximum opening of the port to steam, the angular advance (the lead of the valve being $\frac{3}{16}$ inch), and the piston positions at cut-off, release, and when compression begins. You may neglect the effect of the obliquity of the connecting-rod.

23. The travel of a D-valve is 3 inches, and the angular advance is 30°. Find the outside lap, so that the lead may be $\frac{1}{10}$ inch, and, neglecting the obliquity of the connecting-rod, find the position of the piston at the point of cut-off. Sketch the valve.

24. A slide valve has a stroke of $4\frac{1}{2}$ inches, a lead of $\frac{1}{8}$ inch, and a lap of $1\frac{1}{8}$ inches: determine by construction at what point of the piston stroke the valve opens, shuts off steam, and opens release. Neglect effects due to obliquity of connecting-rod.

25. Sketch a simple slide-valve showing cylinder ports and no more of the cylinder; show the valve in its mid position. Show in dotted lines the position of the valve when the piston has just begun its stroke. What do we mean by outside lap of a valve, inside lap, advance, and half-travel? The half-travel is 3·36 inches, advance 42°. What simple diagram enables us to find the distance of the valve from its mid stroke for any position of the main crank? Prove it correct. Having such a diagram, we obtain the openings of the port to steam or exhaust by subtracting the outside or inside lap; explain how this occurs.

LECTURE XIV.—A.M.INST.C.E. QUESTIONS.

1. In a slide-valve, having given the point of cut-off, the lead, and the travel of the valve, show how to find the outside lap and the angular advance.

2. Having given the laps and the travel of a side-valve and the angular advance of the eccentric, show how to find the position of the piston for each event in the steam distribution in both strokes, the ratio of length between the connecting-rod and crank being known.

3. Describe a link motion and how it works a slide-valve. State the method by which we find the half-travel and the advance of the valve for any position of the gear, and give reasons for its correctness.

4. The length of a crank is 14 inches, the slide-valve has half-travel of $2\frac{1}{2}$ inches, its lap is $1\frac{1}{2}$ inches, and its lead $\frac{1}{8}$ inch. At what distance from the end of the stroke will the piston be when the steam is cut off if the obliquity of the connecting-rod is neglected? Prove that the Zeuner diagram gives correct answers when the motions are simple harmonic. *Ans.* Back-stroke 14·5 in.; forward 9 in.

5. Explain how a Zeuner diagram may be used in the design of the steam and exhaust ports of a double-acting engine cutting off at $\frac{3}{4}$ stroke, compression commencing at $\frac{3}{4}$ back-stroke. The cylinder is 36 inches in diameter, 5 feet stroke.

LECTURE XV.

CONTENTS.—Actual *versus* Ideal Conditions and Behaviour of Steam in the Cylinder of a Steam Engine—Loss of Pressure and Temperature, with Condensation, between Boiler and Engine Cylinder—Initial Condensation in the Cylinder—Devices for Reducing Cylinder Condensation—Steam Jacketing as a Preventive against Initial Condensation—Superheating as a Preventive against Initial Condensation—History of Superheated Steam—Prof. Ewing's 1899 Trials on the Schmidt System—Prof. Watkinson's Superheaters—Imaginary and Actual Steam Expansion Curves—The Real Benefits of Superheated Steam—Steam Separators—Effects of Clearance—Compression or Cushioning—Causes why Compression does not Return the Work Spent on it—Lead—Wire-drawing—Release—Compounding—Questions.

Actual *versus* the Ideal Conditions and Behaviour of Steam in the Cylinder of a Steam Engine.—In Lectures XII. and XIII., ideal, perfect, or imaginary conditions of the action of steam and of a gas doing work in a cylinder were considered. In Lecture XIV. the distribution of steam in a cylinder was dealt with, as effected and affected by the ordinary eccentric, slide valve, crank, connecting-rod and piston. Now, we have to consider :—

(1) In what condition ordinary steam from an ordinary boiler arrives at the engine stop valve, and how it is affected by its admission therefrom into the valve casing and the cylinder.

(2) How the steam behaves up to the point of cut-off, during expansion, release, exhaust and compression.

(3) How far the losses due to conduction, radiation, wire-drawing, clearance, and initial condensation are preventable, and what are the supposed as well as the actual benefits derived from high speeds, superheating, and from compound expansion in two or more cylinders.

Loss of Pressure and Temperature, with Condensation, between Boiler and Engine Cylinder.—Suppose that a boiler is capable of generating plenty of dry steam to keep an engine going continuously at its full normal load, then, if the steam pipes connecting the boiler and engine stop valves are short, straight, of sufficient size, and well-lagged with good non-conducting material, the drop in pressure and corresponding temperature between the boiler and the cylinder side of the stop valve, as

measured by two accurate steam gauges and thermometers, should not exceed 2 per cent. It, however, often happens, due either to too long or too small or imperfectly covered steam pipes, with perhaps several sharp bends, that the fall of pressure between a boiler and an engine stop valve exceeds 10 per cent., due to wire-drawing and friction. This mere drop in pressure, although it represents a direct loss in the potential energy of the steam, does not constitute the whole evil. For, undoubtedly, if the steam left the boiler as dry saturated steam, without any superheat in it, a portion would have liquefied on arrival at the valve casing. This very liquefaction bedews or wets the inner surfaces of the steam pipe and valve casing, the valve, ports, cylinder cover, and piston, thus causing still further liquefaction on account of the fact, that steam much more readily condenses upon a wet than upon a dry metallic surface. Further, wet steam leaks past valves and pistons much more easily than dry steam. Consequently, by the time that steam with only a 2 per cent. drop in pressure has passed from the stop valve into the cylinder through large, straight, short ports and begun to do its work upon the piston, it will have lost at least *other* 2 per cent. in pressure, and probably 10 per cent. of the weight of steam which left the boiler, up to the point of cut-off in each stroke, exists as water in the cylinder, even if the valve casing and cylinder are well lagged and covered with wood. Whereas, in the case of the steam which arrived at the stop valve with a 10 per cent. drop in pressure, if it has now to pass through long, narrow, bent ports, and if the cylinder and valve casing are not lagged, it may have lost more than *other* 10 per cent. in pressure and 30 to 50 per cent. of the weight of the steam which left the boiler dry, may now exist as water in the cylinder at the point of cut-off! Such a condition of affairs has been in the past of only too common occurrence, and it is perfectly evident, that such a mixture of steam and water cannot possibly expand in the cylinder, either isothermally or adiabatically. It is, therefore, not giving the good dry steam which left the boiler a fair chance to treat it in this crude, unscientific, and uneconomical manner.

Of late, far more attention has been given to this subject than was the case twenty-five to thirty years ago. The urgent demands due to severe local and international competition, for economical marine, factory, and electric plant engines, coupled with the simultaneous rapid advance and opportunities of scientific engineering education, have so combined to produce boilers, steam pipes and engines, wherein steam is generated, conducted and worked, that now leave but little to be still

further expected in the way of the economical production and application of steam as a motive power in the best up-to-date examples.

Initial Condensation in the Cylinder.*—For the purposes of argument and explanation, let us just suppose that the steam pipes are extra large and short, and that they have been well lagged with the very best commercial non-conducting material; further, that the valve casing and the cylinder are well lagged and covered with wood; also, that the steam ports are short and large, and that dry steam is admitted into the valve casing. Now, if the cylinder is one belonging to a simple condensing engine, its end, into which the steam is being admitted from the valve casing, must have been in direct communication with the condenser during the exhaust of the previous stroke. Consequently, this end must have been reduced to nearly the temperature of the exhaust steam, because the interchange of heat between the working skin surface of the cylinder and the exhausting steam is rapid. The temperature of the inside of an ordinary condenser may vary between 100° and 140° F., according to the vacuum and other circumstances, but we shall not be far wrong if we suppose, that the surfaces of the piston, cylinder cover, and port through which the steam just left this cylinder during the end of the previous stroke, had fallen to between 150° and 190° F. Now, if the fresh, dry, entering steam be, say, 50 lbs. pressure absolute, its temperature will be 280° F.; and, naturally, the moment that it comes into contact with a conducting surface of only 150° to 190° F., it will at once part with a quantity of its heat with the result, that some of it instantly condenses upon the surfaces of the steam passages, cylinder cover, and piston, until these have been warmed up to a temperature somewhere between what they were and that of the entering steam. The very fact of these surfaces thus becoming wet induces still more steam to condense and the pressure to fall further than if they had been dry at the reduced temperature. *This liquefaction is termed "the initial condensation of the steam in the cylinder."* It accounts for a large proportion of the consumption of the steam in the cylinder of a simple condensing engine.

* Those who wish to study this subject thoroughly, should read the several papers by Bryan Donkin, Jr.; Profs. Dwelshauvers-Dery, Callendar and Nicolson, &c.; on "Cylinder Condensation, with Measurements of the Temperatures of the Cylinder Walls by Mercury and Platinum Thermometers," as found in the *Proc. Inst. C.E.*, vol. xcviii., pp. 250, 254; vols. c., p. 347; cvi., p. 264; cxv., p. 263; cxx., p. 323; and cxxxi., p. 147 The last of these papers is the most important, because it refers to the previous papers, and to many careful thermo-electric measurements.

During the time that this steam is entering the cylinder up to the point of cut-off, part of its potential energy is being converted into work. If the pressure in the cylinder be kept constant up to cut-off, it shows that these initial losses are being replenished by fresh boiler steam and the drain on that steam by heat from the furnace.

When cut-off occurs and expansion of the steam really begins in the cylinder, still further liquefaction takes place and the pressure drops more quickly than it would otherwise have done, due to the mere transformation of heat into work, because fresh surfaces are being exposed by the piston. This liquefaction goes on until the temperature of the liquefied steam exceeds that of the steam in the cylinder. Then, re-evaporation takes place, and the pressure during the latter part of the stroke is kept up higher than it would be, due to the expansion of dry steam. Most of this re-evaporation, however, occurs during release and the exhaust stroke. This prevents the vacuum from being so good as it would otherwise have been, had the steam remained dry from admission to the end of the steam stroke. Consequently, a large portion of the heat of the entering steam, which is spent in raising the temperature of the cylinder, is uselessly thrown away in heating the condenser and creating an opposing back pressure.

Devices for Reducing Cylinder Condensation.—In addition to Watt's *separate condenser*, which is always used in the case of condensing engines, the following are the chief methods which have been tried for reducing the initial and subsequent condensation of steam in the cylinders of steam engines, although not necessarily in this precise order:—(1) Steam jacketing, (2) superheating, (3) steam separators, (4) reducing the clearance surfaces and volumes in the passages and cylinders, and (5) compounding. We shall endeavour to discuss these methods in this and in the subsequent lectures as fully as the space will permit, and give references to the more important papers which specially treat on them.

Steam Jacketing as a Preventive against Initial Condensation.—To prevent excessive initial condensation as well as the undue alternating give and take of heat between the working steam and the cylinder surfaces as far as possible, Watt invented a system which he termed "Steam Jacketing the Cylinder." This consists of passing steam direct from the boiler into an annular space surrounding the cylinder barrel, and sometimes into the cylinder covers, which are made hollow for that purpose. The idea was to keep the cylinder surfaces as hot as possible. It,

however, really requires steam of considerably higher temperature than the initial temperature of the entering steam, with which to fill the jackets, before it can be of great use, and hence the hot air jacket devised by Mr. Edward Field. Still, ordinary steam jacketing does materially help to prevent condensation inside the cylinder; and, as we shall see from the up-to-date practical examples which are illustrated and described further on, that this system is frequently adopted. It is simply a case of confining liquefaction of steam to the jacket, where it is harmless if the jacket is properly drained of both water and air, instead of permitting it to take place unduly inside the cylinder, where it is highly detrimental and wasteful; since, during the admission to and the expansion of steam inside the cylinder of a steam-jacketed engine, liquefaction must take place *in the jacket* in order to provide heat for the work being done inside the cylinder.

It is doubtful if Watt thoroughly understood the principle of the action of the steam jacket, and for a long time after he introduced it, engineers thought that it was simply a case of "robbing Peter to pay Paul." Of course, the surrounding of the working barrel and the covers of a cylinder with a steam jacket does not do away with the necessity for the lagging of the cast-iron outsides of the jacket with a good non-conductor. The better these are lagged, the more will conduction and radiation of heat be prevented to their outer surroundings; and, consequently, the more thoroughly will the heat in the steam jacket penetrate inwards to the working steam. Besides, it ensures a cooler, and hence a more comfortable, engine-room if as little heat as possible passes into it.

Economy Due to Steam Jacketing.—(1) This increases the earlier the cut-off. (2) It increases the less the diameter of the cylinder. (3) It decreases as the piston speed and revolutions increase. (4) It decreases the higher the entering steam is superheated. For example, it is of little use to jacket the H.P. cylinder of a compound engine when the supply steam is superheated by 200° F. or more.

Superheating as a Preventive against Initial Condensation. — In Lecture VIII. we explained what was meant by superheating steam. We showed there, that if heat be added to dry steam its temperature is raised without increasing its pressure, and the more it is heated the nearer does it approach to the physical qualities of a perfect gas. Consequently, if a convenient and economical means be adopted of imparting the necessary heat units to steam, which shall ensure not only its arrival at the

cylinder in a perfectly dry state, but also prevent initial condensation during the time of its admission and during expansion, the whole of the troubles of leakage past pistons and valves, as well as the condensation (which we have been discussing), would at first sight appear to be overcome. In order to explain how this desirable object has not been so easily accomplished, and how it happened that its adoption has recently been revived and strongly advocated, we shall devote a few pages to the history of this subject, to the means by which it is produced, to the precautions which must be observed in using it, and to some of the current misconceptions regarding its thermo-dynamic properties and its capabilities.

History of Superheated Steam.*—From an early date in the use of steam as a motive power, it was recognised, that the steam generated in ordinary steam boilers contained more or less water in suspension. It was also known, that if this suspended water—or *priming water*, as it is usually called—was converted into *dry steam*, or still better, into *superheated steam*, economy would result in its use in the steam engine. The precise physical qualities, functions, and most reliable methods of creating as well as of using highly superheated steam are still engaging the special attention of engineers.

Although John Payne undoubtedly produced superheated steam in his "flash" boilers in 1736, Sir William Congreve treated steam after its formation in a boiler in 1821, and Jacob Perkins produced such steam in 1822, it was not until 1832 that Trevithick patented and seemed to understand the economy derivable from the use of superheated steam. We are, however, indebted to the investigations of Hirn for the first really useful trials and scientific explanations of its properties, as found in the *Bulletin of the Industrial Society of Mulhouse and Alsation Society of Steam Users*. He patented a form of superheater in 1855 which he called the "Hypo-thermo-generator."

About the same time (1854 to 1864), Mr. B. F. Isherwood, Chief Engineer, U.S. Navy, carried out a series of experimental researches to ascertain the comparative economy of steam with different measures of expansion, the causes and quantities of the

* The student who desires to study this subject fully should read a paper on "Superheated Steam," by F. J. Rowan, A.M.Inst.C.E., and the discussion thereon, as found in vol. xlvii., *Trans. Inst. Engs. and Ships. in Scotland* (Glasgow), where other papers and sources relating to this interesting and instructive subject are mentioned.

condensations in the cylinder, the economic effect of steam jacketing and steam superheating, etc.*

Mr. John Penn, the well-known marine engineer of Greenwich, fitted superheating apparatus into the S.S. "Valetta" in 1857, and thus saved 20 per cent. in the consumption of fuel. Many other eminent engineers followed his example, such as Boulton & Watt, with Scott Russell, for the "Great Eastern" in 1862, thus superheaters for marine engines became more or less popular during these 10 or 12 years.†

In 1868 a superheated steam plant was pulled out at the Aberdeen Iron Works, because considerable trouble had been experienced from their pitting and corrosion, as well as from the difficulty of lubricating the pistons, slide valves, and their rods. Although the pressure of steam did not exceed 20 lbs. by gauge at that time, yet the temperature of the superheated steam was such, that it either decomposed or volatilised the ordinary fatty and vegetable oils then used for lubrication purposes. Seeing that Randolph, of Randolph & Elder, Glasgow, had successfully made and applied compound marine engines by 1868, with better commercial results and with far less trouble than any known combination of superheaters and simple condensing marine engines, superheating fell into disfavour until it was revived about 1895.‡

Prof. Ewing's 1899 Trials of the Schmidt System.—In October, 1899, Prof. J. A. Ewing, F.R.S., of Cambridge University, tested "The Schmidt System" at Sheffield on a single-acting engine with two horizontal cylinders lying side by side. This engine had pistons of long trunks without piston-rods or stuffing-boxes, and cranks set at 180° apart. The pistons were 7·09 inches diameter, stroke 11·8 inches, and made 175 revolutions per minute. Steam was generated in a vertical boiler with cross tubes, and above the vertical flue was fixed the superheater. When the boiler pressure was 129 lbs. per square inch by gauge, the temperature of the steam leaving the superheater was 387° C. and 338° C. at the engine. This small condensing engine of

* See *Experimental Researches in Steam Engineering*, by Chief-Engineer B. F. Isherwood, U.S. Navy, published by Wm. Hamilton, Hall of the Franklin Institute, 1863.

† See *Proc. Inst. C.E.*, 1860; *Trans. Inst. M.E.*, 1859-60.

‡ See *Trans. Inst. Mech. Engs.*, April, 1896, for a paper by Wm. Patchell, *et seq.*; and Prof. W. C. Unwin's paper on "The Determination of the Dryness of Steam." *Proc. Inst. C.E.*, vol. cxxviii., May, 1897, for Prof. Wm. Ripper's paper. Also, *Trans. Amer. Soc. Mech. Engs.*, vol. xvii., May, 1896, for Prof. R. H. Thurston's paper on "Superheated Steam."

20·1 I.H.P. only used 17·7 lbs. of steam per I.H.P.-hour, as measured by weighing the condensed steam. This excellent result, as well as others carried out by the same person on other plants of the same make, gave a special impetus to inventors and steam engine users, more especially to those in charge of central electrical stations. Since then, many other patented forms have been tried more or less successfully and economically. With the use of the high flash-point oils and the adoption of valves and superheater tubes made of special metals to resist erosion and corrosion, they have overcome the difficulties of lubrication and chemical action so freely experienced by the previous generation of engineers.

Prof. Watkinson's Superheaters.*—Professor Watkinson has been one of the most successful advocates of steam superheating.

FIG. 1.—PROF. WATKINSON'S SUPERHEATER FOR INDEPENDENT FIRING.

Early during this last wave of resuscitation in its favour, he devised two types of superheaters on the *independently fired* and the *shunt circuit* systems. Fig. 1 is a reduced illustration of a photograph taken during the construction of an independently fired superheater in the Scotstoun Iron Works of Messrs. Mechan & Sons, Glasgow, and which has been working for some years in a Lanarkshire Colliery.

The three "headers" or straight pipes seen at the bottom of the photograph are usually made of mild steel of 10 to 12, or

* See *Proc. Inst. N.A.*, June, 1903, for his paper on "Some New Types of Superheaters." I am indebted to this Institution and to Prof. Watkinson for permission to reproduce the three figures with my own system of index lettering, and make this reference to his paper.

more, inches in diameter, according to the size of the installation, whilst the inverted U tubes are $1\frac{1}{4}$ to $1\frac{1}{2}$ inches of solid drawn steel. These tubes are so arranged in rows and at such small distances apart, that the products of combustion from the furnace must pass between them in thin divided sheets. The object of causing the heated gases to be split up in this way is, that they may the more readily part with their heat to the tubes. Ordinary steam (wet or dry) from the boiler stop valve, first passes into the "inlet" header, then through one set of tubes to the "intermediate" header, from it through the second set of tubes to the "outlet" header, and from it to the stop valve at the engine in a more or less superheated condition, by regulating the flue dampers. The products of combustion flow transversely through between the tubes, where the temperature of the approaching gases may be white hot, whilst they may leave them at 450° F. or thereby. Consequently, care must be taken, that neither the tubes suffer, nor the steam be over-superheated, nor the gases leave at too high or too low a temperature. One thing is clear, that the tubes in this superheater have great freedom of expansion and contraction, due to their shape and to their simple attachment to the headers; for, they are merely passed through drilled holes in the latter and fixed thereto by a boiler tube expander, applied from the insides of the headers in the ordinary way.

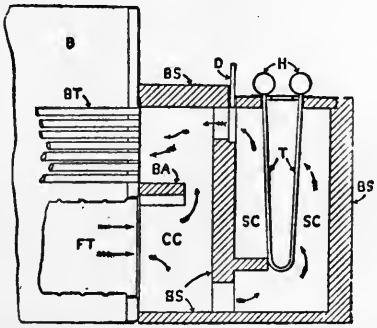

FIG. 2.—PROF. WATKINSON'S SUPERHEATER FOR DRYBACK LAND BOILERS.

Fig. 2 shows the application of a *shunt circuit* superheater to an ordinary "dryback" land boiler. Here the furnace gases pass, as indicated by the arrows, from the furnace flue tube F T, of the boiler B, to the combustion chamber C C, and strike against the inside of the brick setting B S. Then, according to the regulation of the damper door D, more or less of the gases

pass upwards and around the end of the baffle arch B A, and through the boiler tubes B T. The remainder of the gases pass on to the superheater chamber, S C, through between and around the superheater U tubes, T (as shown hanging freely from their two headers, H), to the opening left by the elevated damper, D, the boiler tubes as before, and from thence to front smoke box and up the chimney. When the damper, D, is closed, none of the gases pass through the superheater.

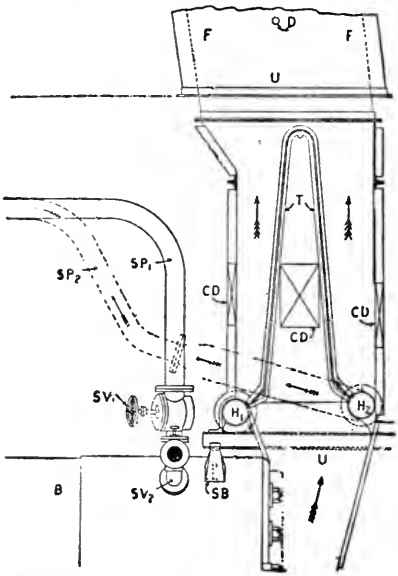

FIG. 3.—PROF. WATKINSON'S SUPERHEATER FOR MARINE BOILERS.

Fig. 3 shows this superheater placed above the front smoke box of a marine boiler B, inside the uptake U, below the funnel F. Here the gases which leave the boiler tubes for the uptake U, pass by the two headers H_1, H_2, through between the inverted U superheater tubes T, to the funnel F, where the throttle valve type of damper D, is indicated by an end view of its spindle. Ample provision is shown by four cleaning doors C D, for getting at the superheater tubes. The headers H_1, H_2, rest upon wrought-iron beams upheld by supporting brackets S B, fixed to the boiler shell.

When ordinary steam is desired, the main stop valve $S V_1$, is opened and the steam passes direct from the boiler B, through

the steam pipe S P_1, to the engines. But, when superheated steam is desired, S V_1 is closed and S V_2 is opened, which permits boiler steam to flow into header H_1, and the dried superheated steam is then taken from header H_2, by the steam pipe S P_2, to the engines.*

Imaginary and Actual Steam Expansion Curves.—Having discussed how ordinary wet, dry, and superheated steam arrives from boilers and superheaters at the engine stop valve, and how liquefaction takes place in the cylinder of an ordinary simple condensing engine, it will now be advisable to distinguish between the ideal or imaginary curves of gas, steam, and air, and that of the actual expansion curves derived from ordinary and from superheated steam. We shall deal, later on in this and in future lectures, with the other devices which have been tried for preventing liquefaction in a cylinder, and show how indicator diagrams are taken and measured.

Curves 1 and 2 are Isothermal Expansion or Hyperbolic Curves, where P V = *Constant.*†—Referring to Fig. 4, imagine (as we did in the previous lectures), that a perfect gas is admitted at 120 lbs. absolute per square inch to a non-conducting cylinder (having no clearance space between its piston and the cylinder cover), then this pressure may be depicted by the ordinate line, O A. Let the gas begin to press forward the piston slowly for $\frac{1}{10}$ of the full stroke, as represented by the line, A C. If the gas be now cut off sharply from the cylinder whilst its temperature is (somehow or other) maintained constant, it will expand and force the piston forward to the end of its stroke. If this expansion be performed *very slowly* (so that the gas may still be kept at constant temperature), the pressure of the gas will so fall, that ordinates drawn up from the horizontal line of volumes, O B, at any number of points along the stroke, will represent (to the same scale as O A), the pressures which would exist in the

* This superheater has been fitted not only to German Ocean steamers, but to Trans-Atlantic liners, and the results are being now watched and noted, not only by the professor, the maker, and the owners of these ships, but also by the large army of naval and mercantile marine engineers. Unfortunately, as far as this edition is concerned, reliable, definite data *re* the results of these trials have not yet been obtained over a sufficiently long period to place them before my readers. But, in some experiments carried out by Prof. Watkinson with his "shunt circuit" type connected to a Lancashire boiler of 8 feet diameter and 30 feet long, he says that he found a saving of 27·4 per cent. in coal over that with the same boiler without his superheater.

† The student should here refer to *The Engineer*, May 29th, 1903, p. 535, for Prof. Robert H. Smith's article on "The Expansion, Separation, and Compression of Wet Steam." Also, to *The Electrical Review*, May 27th, 1904, p. 866, for Mr. W. H. Booth's article on "Steam Curves."

cylinder behind the piston, at each point along the stroke. The curved line No. 2, drawn through the upper ends of these pressure ordinates will therefore depict graphically the expansion of the gas within the cylinder, and the equation to this curve is that for the hyperbola, viz.:—

$$P\,V = \text{constant.} \qquad \text{Or, } P \propto \frac{1}{V}.$$

Where P = pressure per square foot, and V = volume in cubic feet.

Because, the pressure of an enclosed perfect gas which is kept at constant temperature varies *inversely* as its volume. In the same way, if we abide by the foregoing conditions and let the cut-off be at D instead of at C, the curve No. 1, or D E, will then represent the isothermal expansion of the gas.

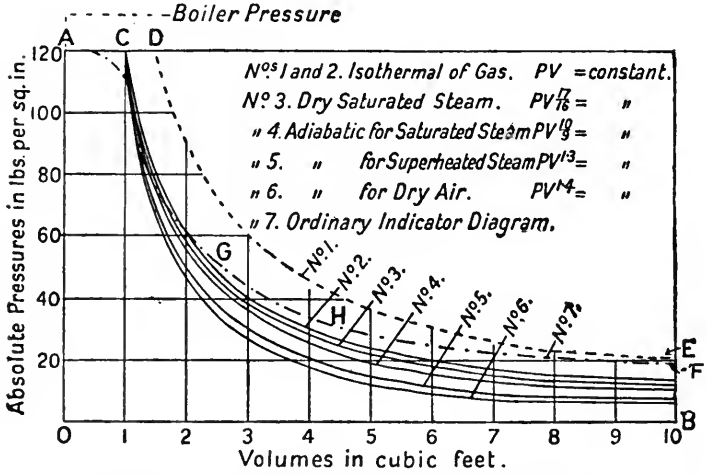

FIG. 4.—GAS, STEAM, AND AIR EXPANSION CURVES.

It is evident, that the special restrictions and imaginary conditions here assumed, do not pertain to those of any real cylinder made of metal or to any known means of keeping steam *at constant temperature* whilst expanding, and at the same time doing work. Consequently, these two curves, Nos. 1 and 2, do not represent the actual conditions under which ordinary steam expands in a cylinder. They are never obtained in practice, although they are convenient for showing the limit to which a perfect gas may attain whilst expanding isothermally.

Curve 3—Dry Saturated Steam Curve, where $P V^{1\frac{1}{9}} = Constant.$ —If dry saturated steam be admitted at 120 lbs. per square inch absolute, into a well-jacketed cylinder for $\frac{1}{10}$ of the stroke (as represented by the line, A C, in Fig. 4) and then allowed to expand, it would fall in pressure as represented by Curve No. 3, if, during the whole time of the said expansion, the steam just received sufficient heat from the jacket to keep it dry. Prof. W. J. M. Rankine devised the following equation to represent this curve :—

$$P V^{1\frac{1}{9}} = P V^{1\cdot 0846} = \text{constant}, \quad C = 69{,}000 \text{ foot-lbs.}$$

The student should here refer to the figure in Lecture XXVI. on the De Laval turbine, which has been accurately drawn, representing this curve when a volume of 1 cubic foot is plotted horizontally to the same scale as 1 lb. pressure vertically. In fact, it is only by so drawing these curves to a uniform scale that the eye can readily detect their variations in form and slope.

This curve of expansion may be closely followed by admitting superheated steam to a cylinder, so that the extra heat units of superheat are just expended in doing work, and in heating the cylinder up to the point of cut-off. Thereafter the steam must just get sufficient heat from a jacket to keep it dry to the end of the stroke. As will be seen from the practical examples given later on, engineers do frequently aim at producing this high-class condition of affairs, and they consequently compare the efficiency of their results by drawing this curve on their combined indicator diagrams.

Curve 4—Adiabatic Expansion of Saturated Steam, where $P V^{1\frac{6}{9}} = Constant.$—*If a gas neither receives nor rejects heat as it expands or is compressed, then the curve which gives the relation between its pressure and its volume at each instant, is termed an adiabatic curve. Hence the work done by a gas when expanding adiabatically is all performed by a proportional loss of own internal initial heat energy. When a gas is being compressed adiabatically, then the whole of the work spent upon compressing it goes to increase its internal energy. Consequently, adiabatic expansion of steam could only be perfectly realised, if it were expanded or compressed without any change in its nature, in a perfectly non-conducting, non-radiating cylinder. This condition of affairs is never actually realised with steam, because, whilst it expands and does work, it loses heat in proportion to the work done and to conduction between it and the metal cylinder. But, the greater the piston speed and number of revolutions per minute, the less is the time and*

*See *The Engineer* for December 22nd and 29th, of 1905, for Perry's, Swinburne's, and Neilson's letters, and compare their statements with the above definition.

opportunity for this latter effect to take place. Hence, we gain so far in economy by high piston speed and an increase in the revolutions per minute.

Although this curve is not strictly followed by the expansion of steam, yet (as will be seen later on) engineers do frequently compare their performances by plotting it over their combined indicator diagrams. In the case of the De Laval and some other steam turbines, this curve does actually express the rate by which the steam pressure diminishes as its volume increases. This is clearly shown by the curve which has been carefully drawn to the same scale for 1 lb. pressure and 1 cubic foot volume, just referred to in Lecture XXVI.

Here, $P V^{\frac{1 \cdot 0}{9}} = P V^{1 \cdot 1}$. Or, $P \propto \frac{1}{V^{1 \cdot 1}}$.

Referring again to Fig. 4. If dry saturated steam were admitted into a perfectly non-conducting, heat-opaque cylinder at 120 lbs per square inch absolute for $\frac{1}{10}$ of the stroke, and allowed to expand therein without receiving or gaining heat from any source whatever, it would follow Curve No. 4, which falls below the previous curves.

Curve 5—Adiabatic Expansion of Superheated Steam, where $P V^{1 \cdot 3} = Constant$.—If superheated steam were admitted to a cylinder at 120 lbs. pressure per square inch absolute and cut off at $\frac{1}{10}$ stroke, as represented by A C in Fig. 4, then, if this steam remained in a superheated condition up to the end of the stroke, it would expand according to the formula :—

$$P V^{1 \cdot 3} = \text{constant.} \quad \text{Or, } P \propto \frac{1}{V^{1 \cdot 3}}.$$

However, this would entail in an ordinary steam cylinder doing ordinary work a very high initial degree of superheat, which, as will be explained later on, is inadvisable unless certain precautions are observed.

Curve 6—Adiabatic Expansion of Dry Air, where $P V^{1 \cdot 4} = Constant$.*—Following the same reasoning in the case of dry air, we see, that the curve plotted to the equation,

$$P V^{1 \cdot 4} = \text{constant.} \quad \text{Or, } P \propto \frac{1}{V^{1 \cdot 4}},$$

yields Curve 6 in Fig. 4. This is the lowest of all the curves,

* Prof. Rankine in his text-book on *The Steam Engine* gives the power for dry air as 1·408 ; Perry, 1·414 ; and Ewing, 1·404 as well as 1·408 ; but for our purposes here, 1·4 will be sufficiently accurate.

and hence the least amount of work will be done by air per cubic foot when expanded adiabatically.

The following table shows the *mean pressure as a percentage* of the initial pressure or work obtainable by each of the foregoing expansion curves when cut off at $\frac{1}{10}$ of the stroke in a cylinder without clearance :—

PERCENTAGE RATIO OF MEAN TO INITIAL PRESSURE WITH 10 EXPANSIONS.

Isothermal. $PV = Const.$	Dry Saturated Steam. $PV^{\frac{17}{16}} = Const.$	Adiabatic Saturated Steam. $PV^{\frac{19}{9}} = Const.$	Adiabatic Superheated Steam. $PV^{1\cdot3} = Const.$	Adiabatic Dry Air. $PV^{1\cdot4} = Const.$
33 %	31·4 %	30·3 %	26·6 %	24·5 %

Curve 7—From an Indicator Diagram.—If dry saturated steam of the boiler pressure shown in Fig. 4 had arrived at the cylinder with a pressure of 120 lbs. per square inch absolute, and were cut off at $\frac{1}{10}$ stroke, its pressure would, under ordinary circumstances, follow the chain dotted line, A G H F. Here, we see, that the pressure has dropped about 10 per cent. between the boiler and the cylinder, and that the initial pressure falls during the time of admission, due to wire-drawing and initial condensation.

When cut-off takes place, the pressure drops quickly, due to further cylinder condensation, for about another $\frac{1}{10}$ of the stroke; whereas, thereafter, re-evaporation of the previously condensed steam takes place and the pressure keeps up higher than it would have done had there been no initial condensation. Here, the points G, H, and F, represent the beginning, intermediate, and final pressures due this re-evaporation. In reality, if we assumed that there was 30 per cent. of initial condensation at the point of cut-off C, then the weight of steam admitted to the cylinder would have occupied a volume represented by the distance A D, before expansion began. We thus see, that there is a considerable area of lost work from the boiler pressure line down to about the point G, and that we never realise anything like the theoretical full area which the steam could give out, as represented by the figure, O A D E B, if it were supplied as a perfect gas at the given pressure and expanded according to the imaginary isothermal curve, D E.

The Real Benefits of Superheated Steam.—From an examination of these seven curves and the percentage table of mean pressures obtained with ten expansions, it is evident that super-

heated steam does not give such a good return in work done *per unit volume* as dry saturated steam. Under the conditions noted in that table, we observe that the mean pressure is only 26·6 per cent. for superheated steam, as against 31·4 per cent. for dry saturated steam, thus showing that the latter, if kept dry to the end of the stroke, yields fully 15 per cent. more work for the same volume and cut-off. Consequently, we conclude, that from a mere thermodynamic point of view, superheated steam does not yield such a good return as dry saturated steam. This arises from its low specific heat. Of course, per unit weight, superheated steam would contain more heat units than dry saturated steam and give out more work. The real benefits of superheated steam, as we have just seen, come into play in its prevention of initial condensation in the cylinder and in the paradoxical difficulty which it experiences in leaking past moving valves and pistons. We shall frequently refer to the applications of superheated steam later on in these lectures, and shall then take the opportunity of stating how it is generated, used, and compared with ordinary steam under different circumstances.

Steam Separators.—In order to prevent, as far as possible, the introduction of wet or "priming" steam from a boiler entering the valve casing of an engine, a simple device, termed a steam separator, is often interposed between the steam pipe and the engine. As will be seen by referring to the compound Bellis-Morcom engine, this separator consists of a cast-iron chamber into which the wet steam flows and impinges upon a diaphragm plate, thus causing the heavier condensed particles to fall to the bottom of this chamber, where they may be drawn off to the condenser, whilst the separated steam flows upwards to the engine stop valve and valve casing. Of course, all the suspended moisture cannot be trapped in this way, but, nevertheless, the steam is considerably dried and the working of the engine improved.

Effects of Clearance.—In actual practice, the piston does not come close up to the end of the cylinder at the end of its stroke, a small space being of necessity left between the piston and the cover to allow for the wear of the journals and other causes. Besides this, there is the volume of the steam ports between the valve face and the cylinder. This combined space between the piston and the cylinder cover, *plus* the steam ports, is termed *the clearance* of the cylinder, and exercises an important influence upon the expansion of the steam; for it must be filled with steam at the moment of cut-off, and the volume of steam expanding is equal to the volume of the cylinder to the point of cut-off + the space at the end of the cylinder + the volume of the steam ports.

The ratio of expansion of steam in a cylinder, as usually understood, is

$$= \frac{\text{the vol. of cylinder}}{\text{vol. to point of cut-off}}, \text{ or, } \frac{\text{area} \times \text{length of stroke}}{\text{area} \times \text{distance to pt. of cut-off}};$$

but, if clearance be taken into account, the *true* ratio of expansion is much less than the ratio given above.

Let c = fraction of cylinder's capacity representing clearance.
,, r = ratio of expansion *as above*.
,, r_1 = true ratio of expansion.

Then, $$r_1 = \frac{\text{vol. of cylinder} + \text{clearance}}{\text{vol. to pt. of cut-off} + \text{clearance}} = \frac{1+c}{\frac{1}{r}+c} = \frac{r(1+c)}{1+cr}.$$

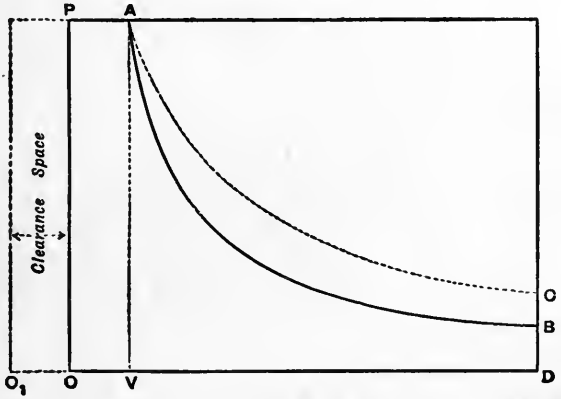

FIG. 5.—EFFECT OF CLEARANCE ON EXPANSION CURVES.

The difference between r and r_1 is obviously greatest with high ratios of expansion, or early cut-off, when $\frac{1}{r}$ may often be equal to c; hence, with high ratios of expansion the clearance space should be reduced to a minimum. An example may make this clearer. Let steam be cut off at $\frac{1}{8}$ of the stroke, then $r = 8$. Also, let the clearance capacity $= \frac{1}{8}$ of the capacity of the cylinder.

Then, $$r_1 = \frac{r(1+c)}{1+cr} = \frac{8\left(1+\frac{1}{8}\right)}{1+1} = \frac{9}{2} = 4\tfrac{1}{2}.$$

Therefore, the volume of steam admitted to the cylinder is really only expanded $4\frac{1}{2}$ times instead of 8 times; and it is easy to see that the curve of expansion will be materially affected thereby. Fig. 5 shows curves of expansion from P V = constant.

A B is the curve which would be followed by the steam expanding 8 times with a volume, O V ($\frac{1}{8}$ O D), and pressure, O P. A C is the curve of expansion, which is really followed by the steam when the clearance space is taken into account, the volume being $O_1 V$, the pressure the same as before, and the expansion then being only $4\frac{1}{2}$ times. This shows the importance of taking the clearance into account in considering indicator diagrams.

In practice it is impossible to avoid clearance altogether, but the losses arising from it may be considerably reduced by closing the exhaust before the end of the return stroke.

Compression or Cushioning.—This is effected, as we pointed out in Lecture XIV., by closing the exhaust port before the piston has completed its return stroke. Then, any steam still remaining in the cylinder is compressed into the clearance spaces. If the compression were so great as to raise the pressure of the steam in the clearance spaces up to the initial pressure of the steam, loss from the clearance spaces would be largely avoided, since these spaces would already be full of steam at the initial pressure, when the piston began its next steam or forward stroke.

Causes why Compression does not Return the Whole of the Work Spent on it.—The total return for work spent on compression could only be strictly true of an engine which expanded right down to the back pressure line before commencing to exhaust. Or, in the case of an engine whose indicator card had only *four* sides; in fact, a *Carnot's reversible engine*, where the cooling takes place entirely by expansion and the heating entirely by compression. The indicator card of an ordinary steam engine has *five* sides, and, as there is a sudden drop of temperature from the point of release to that of the exhaust back pressure, we actually expend more work upon compressing the clearance steam during a return stroke than it usefully exerts on the next steam or forward power stroke.

In addition to this, we know, that the exhaust steam at the point where compression commences is, as a rule, dry steam. If so, the compression will take place adiabatically. But, during the forward stroke, this compressed steam mixes with fresh steam from the boiler, and, as a rule, initial condensation has then taken place. *Now, when steam expands in presence of water it does not and cannot expand adiabatically.* Hence, from this cause also, we see, that the previously adiabatically cushioned steam does *not exert* during expansion the same energy as was put into it during compression. Add to these two circumstances the fact, that heat is always radiating from a cylinder and we see, that compression during exhaust can never

yield up the full work done upon it. Hence, the less the volume of the clearance spaces the better, as in the most efficient Corliss engines.

The mean pressure of steam would, however, be greatly reduced by such excessive cushioning. The useful extent of cushioning, considered with reference to the motion of the engine alone, depends chiefly on the speed of the engine. In very fast-running engines a large amount of cushioning is necessary, in order to check the momentum of the moving parts gradually, and reverse the direction of motion without shocks; but, if the piston speed be slow, a less compression will suffice to keep the motion smooth and free from jerks (see Lecture XVIII.). These considerations limit the amount of compression to be used for any particular case. In engines having a high ratio of expansion and great piston velocity, the exhaust steam might with advantage be compressed up to the initial pressure, but, in other cases, a moderate compression is all that can be recommended. The effect of compression on the indicator diagram is a sudden rise in the exhaust or back pressure line just before steam enters, and is shown on the following diagram by the line, *m n*.

Compression up to the initial pressure of the steam has a further advantage in unjacketed cylinders, viz., that the cylinder becomes heated up to the initial temperature of the steam by the work done upon it, and condensation of the entering steam may, therefore, be greatly reduced.

Lead.—It is necessary in practice, especially with high-piston speeds and low-pressure steam, to open the slide valve before the piston has reached the end of its stroke, in order to assist the compression and maintain the full initial pressure as the piston moves forward. This is shown by the black heavy line, *a* to *cut-off*. This amount of opening is termed the "lead" of the valve. If no lead be allowed, the valve is not sufficiently open when the piston begins to move forward, and the full pressure of steam does not come upon the piston until it has travelled over a part of the stroke. The loss is shown by the sloping-down corner, *a b*, in Fig. 6.

Wire-Drawing.—When the steam comes from the boiler through too small steam pipes, or through small superheater pipes, or when it enters the cylinder through contracted ports, or is prevented from following up the piston at full pressure, it is said to be *wire-drawn*. The effect upon the indicator diagram is a fall of pressure shown by the dotted line, *a b d*. With a common slide valve, a certain amount of wire-drawing will always take place at the point of cut-off, due to the slowness

with which the valve closes the port. This is clearly exhibited in the diagrams of all engines fitted with such valves, by a rounded corner at the point of "cut-off." A perfect valve should open quickly and remain open until the point of cut-off, then close quickly. These conditions are not fulfilled by any of the valves in ordinary use, unless, perhaps, the Corliss and the Proel valve gears. The opening to steam should be sufficiently large to allow the steam to pass into the cylinder with a velocity and volume, greater than the displacement of the piston, if this drop in pressure is to be avoided.

Release.—In order to prevent excessive back pressure during exhaust, it is necessary to release the steam pressure on the piston before the end of the stroke. This has the effect of rounding the right-hand corner of the diagram, as shown by the line, *efg*;

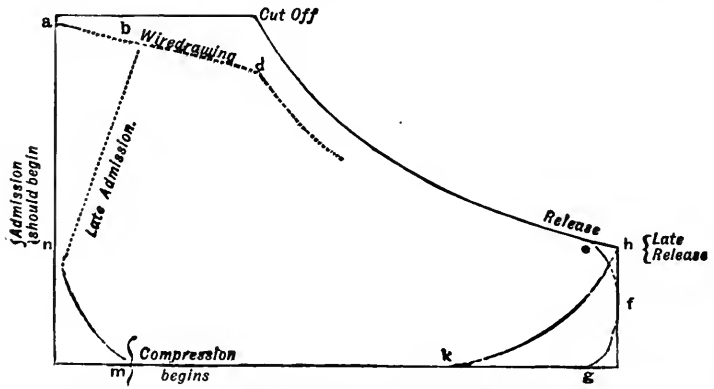

FIG. 6.—EFFECTS OF COMPRESSION, WANT OF LEAD, WIRE-DRAWING, AND RELEASE.

whereas, if steam be carried to the end of the stroke before exhausting, the diagram will take the form shown by the line, *h k*, whereby excessive and wasteful back pressure will be the result.

Compounding.—Having now studied the principal points in connection with the *actual* expansion of steam in a single cylinder, we are in a position to explain the several advantages of the compound engine over the simple expansive engine.

Advantages.—(1) From what has been already stated, the student will see, that the amount of liquefaction which takes place in a single cylinder engine varies with the difference between the initial and final temperatures. Therefore, the loss from liquefaction in any cylinder increases as we increase the

ratio of expansion. The principle of the compound engine, then, consists in dividing the expansion into two or more stages, and carrying out each stage of expansion in a separate cylinder, so as to reduce the variation of pressure and temperature in each cylinder. For some time there was great diversity of opinion as to the advantages of the compound system, but actual practice has now proved beyond doubt that, if properly proportioned, the compound engine is much more economical in consumption of fuel for a given power than the simple expansive engine. Not only is the amount of liquefaction reduced in the compound system, but any re-evaporation of condensed steam which may take place in the high-pressure or intermediate cylinders during exhaust is not a direct source of loss, for, although increasing the back pressure in these cylinders, it is not at once discharged into the condenser, but passes on to the next cylinder and does useful work there.

(2) The loss from clearance is also less in compound engines, for, as we have shown, the loss from this cause increases with the ratio of expansion in each cylinder.

(3) In the simple engine, with a high ratio of expansion, there is of necessity a wide variation of pressure on the piston. This causes an irregularity of rotational effort on the crank-pin, which is objectionable, and the initial stress (which all the working parts must be strong enough to withstand) is far in excess of the mean stress by the compound arrangement.

(4) With compounding, we may use very high initial boiler pressures and permit the steam to do work successively in two, three, or more cylinders placed in series. As previously explained, we obtain high-pressure steam at a comparatively small extra cost. For, as clearly shown by Table II., Lecture VII., the total heat units in 1 lb. of steam at 20 lbs. pressure is nearly 1,152 B.T.U.; at 100 lbs. it is 1,182 or only 32 more, and at 200 lbs. it is 1,198 or only 16 B.T.U. more than at 100 lbs. Now, by using steam of 200 lbs. initial pressure and letting it expand and do work in, say, three successive cylinders, we get far more out of each lb. of steam than we could, by using one big single cylinder with 20 lbs. initial pressure, and more proportionately than it costs to raise the steam from 20 to 200 lbs. pressure.

LECTURE XV.—QUESTIONS.

1. Account for the usual losses of pressure and temperature in steam between a boiler and its engine.

2. Why does initial condensation of steam take place in the cylinder of a steam engine?

3. Enumerate the most successful devices for preventing or reducing initial condensation of steam in an engine cylinder.

4. Trace what happens in the working of a steam engine when the cylinder is not provided with a steam jacket.

5. What is the object of a steam jacket? In what way does the absence of the jacket affect the indicator diagram? State how the economy of the steam jacket is affected by (1) cut-off, (2) size of cylinder, (3) revolutions per minute, and (4) superheat.

6. Give a concise historical statement of the introduction and appreciation of superheated steam.

7. Describe, by sketches and index to parts, a superheater for a land and for a marine boiler.

8. Draw and explain the seven different expansion curves described in this lecture.

9. State the law according to which superheated steam expands in volume when its temperature is raised under a constant pressure. When steam is superheated for the supply of an engine in the usual manner, does its pressure rise above that in the boiler? Explain fully.

10. Distinguish between *superheated* steam and *saturated* steam. According to what law is the pressure of superheated steam affected when it is compressed into a smaller space? What happens in the case of saturated steam?

11. Explain the difference between isothermal, saturation, and adiabatic expansion of steam, and draw carefully the curves for each in one diagram

12. State clearly the real benefits derived from the use of superheated steam.

13. What is a separator and how does it act?

14. What is meant by the term "clearance?" Assuming that the clearance has been reduced to an equivalent length of the stroke of piston, which is 4 feet, and taking the case where steam is cut off at half-stroke, the clearance being 3 inches, you are required to compare the pressure of the steam, when 3 feet of the stroke are made, with the pressure under the same circumstances if there were no clearance. *Ans.* 27 : 26.

15. Define the terms "clearance" and "ratio of expansion" as applied to a steam engine. Draw a theoretical indicator diagram for a condensing engine, where the steam is cut off at $\frac{1}{3}$ stroke. Mark, on this diagram, in dotted lines and writing, the effects of (*a*) clearance, (*b*) late admission, (*c*) wire-drawing, (*d*) late release, and (*e*) too early compression. Steam at 30 lbs. initial pressure by gauge expands to 12 lbs. absolute at point of release. Find ratio of expansion, given clearance = 5 per cent. of stroke, and release taking place at 7 per cent. of stroke before the end. *Ans.* 4.

16. Explain by an indicator diagram the meaning of the terms "compression or cushioning," "lead," "wire-drawing," and "release." Show

how and why the work spent upon compressing the tail end of the exhaust steam up to the initial admission pressure is not given out completely as work done during expansion.

17. What are the principal causes for the presence of water in the cylinders of steam engines? What methods have been employed to diminish the loss due to initial condensation and subsequent re-evaporation in the cylinders? Hence state the advantages which result from the use of compound cylinder engines.

18. State and explain the several advantages due to compounding.

19. Plot neatly and accurately, in different colours and on squared paper, to a vertical scale of $\frac{1}{5}$ inch = 1 lb. pressure, and to a horizontal scale of $\frac{1}{5}$ inch = 1 cubic foot of volume, the isothermal, dry saturated, adiabatic, and superheated steam curves direct from their respective equations, with an expansion of ten times from the point of cut-off and with the initial pressure of 100 lbs. absolute per square inch. Also, plot down what you consider to be the probable curve for steam of 100 lbs. initial pressure with 20 per cent. initial condensation. Then find by measurement, and, by the rules adopted in Lecture XII., the mean pressures obtained from each of these curves, and thus check the table of percentages which these mean pressures are of the initial pressure.

20. Explain why condensation takes place in a steam engine cylinder. Explain carefully, giving figures if possible, the usefulness (and the limit to it) of expansion in one cylinder. Why and under what conditions is it advantageous to expand in two or more cylinders instead of in a single cylinder?

21. Fluid expands from a point on the diagram where p is represented by 1·5 inches, and v by 1 inch, to a place where v is 3·5 inches. According to each of the laws of expansion, pv constant, $pv^{1\cdot0646}$ constant, and $pv^{1\cdot13}$ constant, find the value of p at the end of the expansion in each case.

22. Assuming no clearance; cut-off at one-third of the stroke; expansion according to the law, "pv constant;" what is the mean forward pressure as a fraction of the initial pressure? If the cross-section of the cylinder is 144 square inches, length of stroke 2 feet, what volume of steam is used per stroke? If the back pressure is 17 lbs. per square inch and there are 200 strokes per minute, find in the following two cases the indicated horse-power and the weight of steam used per hour. Neglect clearance, condensation, and leakage.

Initial pressure in lbs. per square inch, . . .	180	100
Volume in cubic feet of initial pressure steam per lb.,	2·51	4·356

Use squared paper to show the weight of steam per hour used by the engine at any power.

LECTURE XV.—A.M.INST.C.E. QUESTIONS.

1. (*a*) What do you understand by a saturation curve? (*b*) Show, with the help of a diagram, what is the relationship between saturated and superheated steam. (*c*) Explain under what conditions and why you would expect superheated steam to effect economy in steam-engine working.

2. In what way does clearance affect the economy of a steam engine? What bearing has compression upon the influence of clearance?

3. Show by reference to indicator diagrams the effect of wire-drawing, too much compression, incomplete expansion, initial condensation, throttled exhaust, and explain how yon would attempt to remedy these defects. (See next lecture.)

4. What is the difference between saturated and superheated steam? Show the relationship between the pressure, volume, and temperature of each.

5. Distinguish between the adiabatic and the isothermal expansion of a perfect gas as regards work done, heat supplied, and effioiency. Prove yonr expression for the work done during each.

6. Why are steam-jackets placed round the cylinders of steam engines? Mention any conditions which would be likely to render a steam-jacket superfluous or injurious to the economy of an engine.

7. Show how the expansion of a mixture of steam and water is represented graphically by a pressure-volume diagram. Sketch roughly a saturation curve and an adiabatic curve, pointing out how the liquefaction which occurs during adiabatie expansion is represented.

8. Explain why condensation generally occurs as steam enters an engine cylinder, and show that it is a cause of loss. Discuss the various methods which may be employed to reduce cyiinder condensation.

9. Explain fully how (1) the ratio of expansion, (2) the work per lb. of steam, (3) the consumption of steam in an engine, are affected by clearance and compression. If the steam be cut off at one-fifth the stroke and the clearance fraction be 0·11, find the true ratio of expansion. *Ans.* 5·24.

10. Write down equations showing approximately the relation between the pressure and volume of steam (1) when it is dry and saturated, (2) when it is moist and expands adiabatically. If the expansion curve be a common hyperbola, show by a diagram how the amount of moisture changes during expansion. Sketch the corresponding curves, for the three eases mentioned, on a temperature-entropy diagram.

11. State fully the various causes in consequence of which the amount of heat per lb. of steam actually converted into work in an engine falls short of the heat theoretically available for mechanical purposes. Point out why the percentage loss in a condensing engine is greater the lower the boiler pressure, and greater than in a non-eondensing engine.

12. What is meant by "clearance surface" and "clearance volume" in a steam-engine cylinder? Why has each a bad effect on the economy of the engine, and what means are adopted to minimise these bad effects?

13. Explain how it is that a theoretically perfect steam engine can only utilise, as work, a small proportion of the heat supply, and further, why an actual steam engine can utilise still less.

14. What economical advantages are gained by the use of superheated steam (*a*) in the steam pipes, (*b*) in the steam engine? Explain the reasons.

15. Explain the advantage of using superheated steam in an engine, and broadly indicate the conditions under which it would be most beneficial.

LECTURE XVI.

CONTENTS.—Watt's Indicator—Special Features of the New Crosby Indicator—Description of the Crosby Indicator—Errors in Indicators—Recording Mechanism—Taking of Indicator Diagrams—Examples of Defective Diagrams and the Causes of their Defects—Combined Compound Diagrams—Fairbairn's Saturation Curve—Graphic Representation on the Indicator Diagram of the Water present during Expansion—Gain in Pounds of Steam per I.H.P. due to Superheating—Gain in B.T.U. per I.H.P. due to Superheating, with Formula—The Effects of Raising the Superheat on the Indicator Card and on the Economy of Steam—Appendix to Lecture XVI. on Amsler's Planimeter—Questions.

Watt's Indicator.—Watt was the first who recognised fully the importance of gaining some knowledge of the action of steam in the steam cylinder of an engine, and the first form of indicator was the result of his efforts in that direction. The figure shows an improved form of Watt's indicator, by which a complete diagram could be traced out.

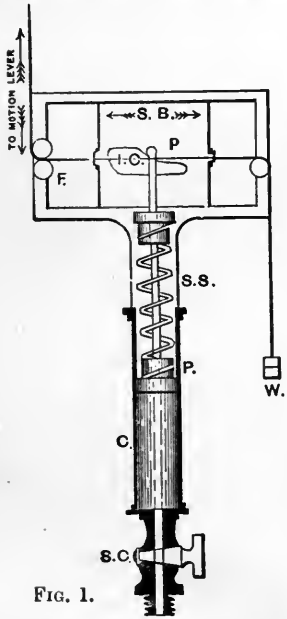

FIG. 1.

It consists essentially of a steam cylinder, C, about 1″ diameter and 6″ long, having a solid piston, P, accurately fitted into it. The cylinder is open at the top, and is fitted with a steam cock, S C, at the bottom, which is screwed into the cylinder cover of the engine, or into the engine cylinder itself close to the end. A small rod is fitted into the piston at one end, and carries a pencil, *p*, at the other, which can operate on a sheet of paper fixed on the sliding board, S B, in front of it. The sliding board can move horizontally in the frame, and receives its motion by means of a cord which is fastened to some reciprocating part

INDEX.

S C for Steam cock.
C ,, Cylinder.
P ,, Piston.
S S ,, Spiral spring.
p ,, Pencil.
F ,, Frame (wood).
S B ,, Sliding board (covered with paper).
I C ,, Indicator card.
W ,, Weight attached to cord for return motion of S B.

of the engine, the period of whose motion is identical with that of the piston of the engine. The return of the board is effected by means of the weight, W, and the cord while the vertical motion of the piston is controlled by a spiral spring, S S.

When the instrument was first brought into use by Watt, the pencil moved in front of a graduated scale, but no lateral motion was given to the paper, hence, all the information obtainable was the pressure of the steam in the cylinder, or the perfection of the vacuum. The addition of the sliding board, however, enables a complete diagram to be set out, and the steam pressure and vacuum ascertained *at any point of the stroke.* The importance of this improvement will be at once apparent.

Different Kinds of Indicators.—There are a great number and variety of these useful instruments, but hitherto we have selected those which were generally recognised as being the most approved of their kind for special speeds and pressures. In present editions of the author's *Elementary Manual on Heat and Heat Engines*, the Richard's and M'Innes-Dobbie indicators are fully illustrated and described; consequently, we have now selected for explanation the American high-speed Crosby instrument.

Special Features of the New Crosby Indicator.—1st. The spiral spring, S S_1, has been removed from the inside of the cylindrical case (near the piston, P) to the outside, and fixed above the moving parts, where it will remain cool under all conditions. Whatever error there was from the spring becoming heated in the ordinary indicator is not present in this instrument. The indicator is therefore suitable for taking indicator diagrams from an engine which may be supplied with superheated steam.

2nd. Another and more important difference lies in the size and shape of the piston. This piston is made 1 square inch in area, and is turned at its rubbing surface in the form of the central zone of a sphere. This greatly reduces the depth of the piston, which is still kept steam-tight by the thin film of moisture which collects around its lip. As the contact of the piston with the interior of the cylinder is a mere line, and the piston is attached directly by a rod to the upper part of the spiral spring, S S_1, it moves freely and without restraint inside the cylinder, notwithstanding the probability of some eccentricity in the action of the spiral spring.

3rd. The pencil mechanism is connected by a rod to and directly over the piston, by a ball and socket joint, B J. Consequently, as the piston takes up the torsional stresses of the

spring, S S_1, when it acts upon the pencil mechanism of the indicator, and its rod, P R, moves in a vertical line through a sleeve attached to the base of the pencil mechanism, the pencil point, P P, is compelled to move in a vertical line.

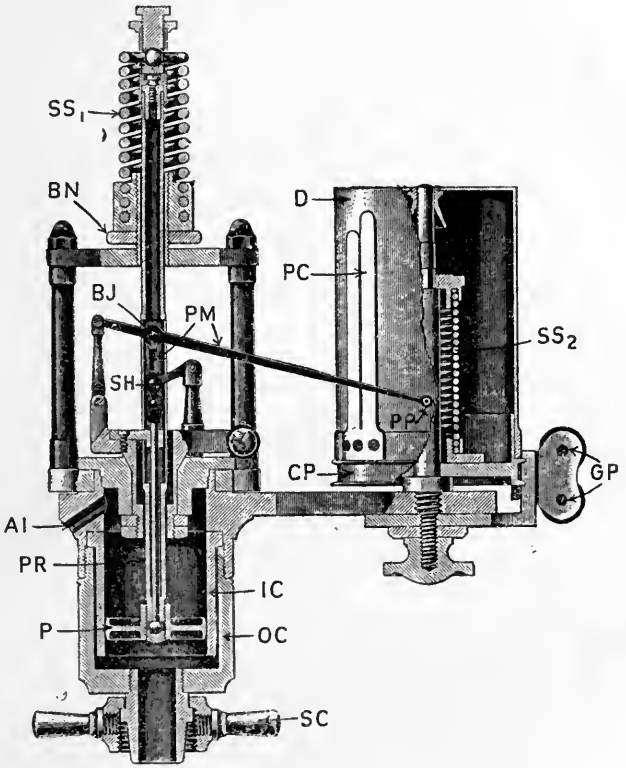

FIG. 2.—THE NEW SMALL CROSBY INDICATOR.

INDEX TO PARTS.

S C for Steam cock connection.	B N for Binding nut.
O C ,, Outer cylinder case.	S $S_{1,2}$,, Spiral springs.
I C ,, Inner cylinder.	P M ,, Parallel motion.
P ,, Piston.	P P ,, Pencil point.
P R ,, Piston-rod.	P C ,, Paper clips.
A I ,, Air inlet.	D ,, Drum.
S H ,, Swivel head.	C P ,, Cord pulley.
B J ,, Ball joint.	G P ,, Cord guide pulleys.

4th. Another feature is the adjustment of the pencil point, P P, to any desired position on the drum, D, by loosening the binding nut, B N, and screwing the spiral spring, S S_1, upwards or downwards. The spiral spring, S S_1, carries with it the whole pencil mechanism, P M. Having adjusted the pencil point, P P, to the desired position on the paper by means of the spiral spring, you again fix it by tightening firmly the binding nut, B N.

Description of the Crosby Indicator.—This indicator has a little barrel or outside cylinder, O C, which communicates with the engine cylinder and stop-cock through the steam-cock connection, S C. It also has an inner cylinder, I C, in which the piston, P, moves steam-tight, due to the condensed steam collecting around the lip of the piston and cylinder rubbing surface. Between the outside and the inside cylinders is an annular space, which acts as a steam jacket to the inner cylinder. It will also be noticed, that I C is perfectly free at its lower end, thus allowing it to expand and contract. The hollow steel piston-rod, P R, is screwed into the piston, P. The pressure of the steam in the engine cylinder raises the piston, P, extends the spiral spring, S S_1, and causes the pencil point, P P, to rise in a straight line through a distance on a magnified scale, proportional to the extension of the spring, and therefore to the pressure of the steam. During this upward movement of the piston, the swivel head, S H, and parallel motion levers, P M, are also raised. Hence, a line is thus traced by P P upon the paper or card, which is wound round the drum, D, and fixed by the paper clips, P C. This drum, D, rotates for about three-fourths of a revolution and back again to its original position as the cord, cat-gut, steel wire, or steel-wire strip (which is wound round the cord pulley, C P, near the bottom) is pulled and let go. The cord or wire from C P passes over the guide pulleys, G P, to any convenient form of reducing arrangement attached to the cross-head of the engine. Inside the drum, D, there is a spiral spring, S S_2, fixed at its lower end, and which becomes wound up when the cord on C P is pulled. This spring, S S_2, serves to turn the drum in the reverse direction during its back or return stroke. An air inlet, A I, is provided in the cap of the indicator cylinder to admit air freely to the top of the piston. When the pressure of the steam in the engine cylinder is less than that of the atmosphere, the difference between these pressures acts on the top of the piston, P, causing it to descend and compress the spiral spring, S S_1. The tap placed just below the indicator at S C allows steam communication with the engine cylinder to be cut off at pleasure. It also permits the indicator cylinder to

be placed in direct communication with the atmosphere, thereby allowing the atmospheric line to be drawn on the diagram.

Spiral Springs.—The indicator springs are each made of one piece of steel wire, as shown by the separate view. They are right- and left-handed, and therefore have no tendency to press the piston laterally against the cylinder when either extended or compressed. Springs adapted to various ranges of steam pressure are supplied with each indicator, and are marked with a number which states the pressure in lbs. per square inch,

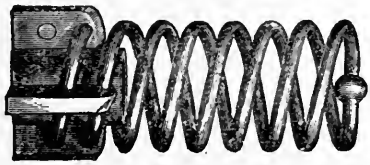

FIG. 3.—SPIRAL SPRING FOR CROSBY INDICATOR.

that will raise the pencil point, P P, through a distance of *one* inch on the paper attached to drum, D. In this form of indicator the spiral spring, S S_1, is kept away from the indicator piston and cylinder, and is well exposed to the atmosphere. Consequently, the spring will generally be about the same temperature as the atmosphere. At the same time it is easily accessible for changing the spring at any time.

Testing the Spiral Springs.—The accuracy of the number marked upon each spring, should be carefully verified by testing the indicator under steam, against a standard pressure gauge or by a mercury column. The spiral spring is found by experiment to be much stiffer when cold than at the higher temperature when in use. Therefore, water-pressure tests are not suitable, unless a proper allowance be made for the change of elasticity of the spring, through its change of temperature.

The Cipollina M'Innes-Dobbie Indicator.—This indicator consists of two steam cylinders, with pistons and parallel motions of the M'Innes-Dobbie type.*

Motion of Indicator Paper and Recording the Diagram Figures.—A roll of metallic paper wound on the paper cylinder A is led over one of the rollers B, around the paper drum, then over the other roller at B, and coiled on the spindle C. The cord D is adjustable to any angle and attached to a suitable part of the engine. At every stroke of the engine piston and revolution of the paper drum, the spindle E is lifted upwards

* See the author's *Elementary Manual* for illustration and description.

by means of internal mechanism, which imparts motion to the cam F. Thus, the ratchet wheel G, having 100 teeth upon its circumference, is propelled one tooth forward for every revolution of the engine. Attached to the wheel G is a cam wheel H, having a plain surface with projecting points on its circumference. Both wheels, G and H, turn round together, but the pawl I rests on H, so that, when a projecting point comes under it, the pawl is raised. This pawl I carries forward the two pencil points L against the metallic paper, by means of the connecting bracket K. Hence, when the paper drum is reciprocating and the pencil arms are rising or falling at each stroke during *this moment of contact*, the one pencil gives an indicator diagram taken from the top end of the cylinder, whilst the other pencil traces a diagram taken from the bottom end of the cylinder. Both diagrams are taken simultaneously upon the same length of paper, as shown by the following figure :—

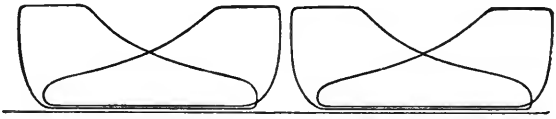

CONTINUOUS DOUBLE DIAGRAMS TAKEN BY THE CIPOLLINA M'INNES-DOBBIE INDICATOR.

Until the moment of contact of the projecting point on H with the pawl I, the metallic paper has been reciprocating with the drum, but immediately the indicator diagrams have been taken, the pencil points L are released from the surface of the paper, and the same mechanism now causes the length of paper occupied by the diagrams to be drawn forward into the drum round the spindle C, whilst another portion of the same roll of paper is unwound from the spindle A, so as to be ready for the next set of diagrams to be taken. This changing arrangement goes on automatically until the paper is exhausted. Also, it is the cam H which determines the time interval between the taking of two sets of indicator diagrams.

From the front elevation of the indicator, it will be seen, that the wheel H has two projections upon its circumference, and, as the wheel G has 100 teeth cut upon its periphery, the instrument is now set to take diagrams at every 50 revolutions of the engine per minute. But, each indicator is supplied with a set of interval wheels H to cause diagrams to be taken at every 25, 50, or 100 revolutions per minute. The roll of paper is 18 feet long, capable of accommodating about 45 to 50 complete double diagrams. For example, if the indicator is set to record at every 50 revolutions, as in this case, with the engine running at 100 revolutions per minute, it means, that this indicator would take cards every half-minute for over a twenty minutes' run.

The atmospheric line on the diagram is adjusted to the height of the pencil point L before commencing the test, and it is thereafter traced along the continuous series of diagrams by the adjustable pencil W.

Revolution and Time Recorder.—The wheel G is connected by means of a spindle to a second paper drum M, over which a strip of metallic paper is led from the spindle U under the guide pulley V. At each turn of the large paper drum, the pawl N receives a "kick" forward, turning the wheel O round one tooth; this wheel in turn propels forward the lever

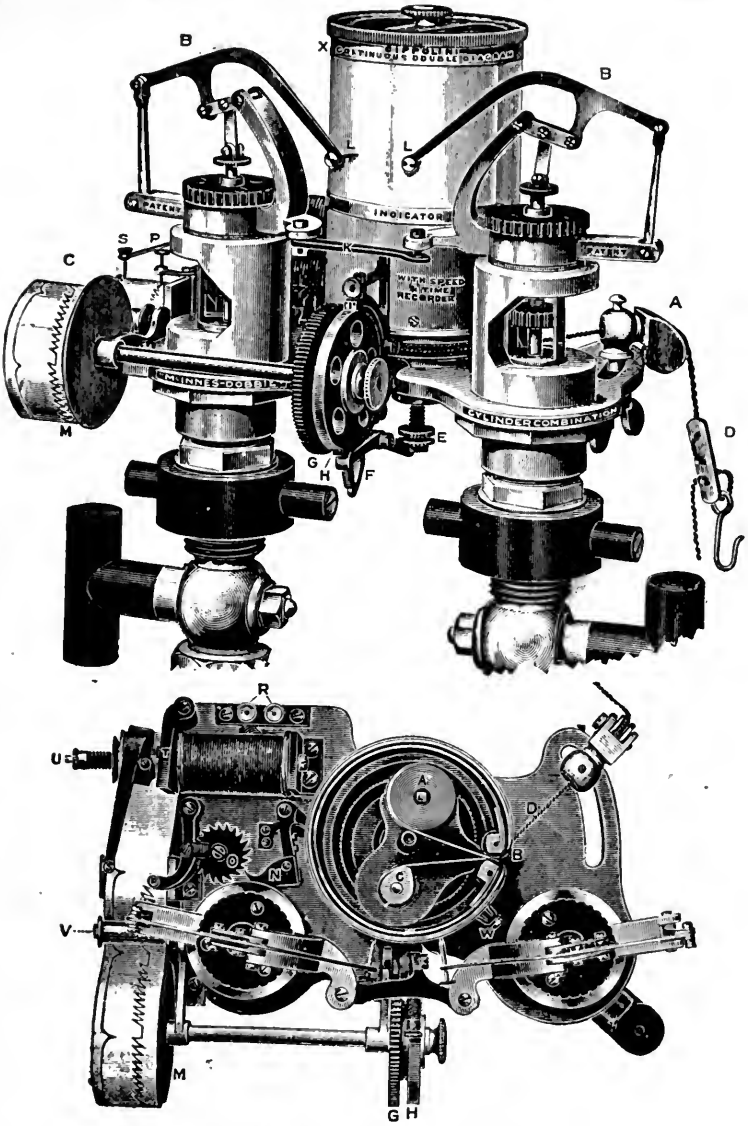

"Cippolina M'Innes-Dobbie" Indicator.

(Made by Dobbie-M'Innes, Ltd., Glasgow.)

with the pencil pointer P. This pointer therefore records *each turn of the drum*, which corresponds to each revolution of the engine, and it is so designed to miss every tenth stroke, as shown on the accompanying figure, thus enabling the revolutions per minute to be read in multiples of ten as well as in units.

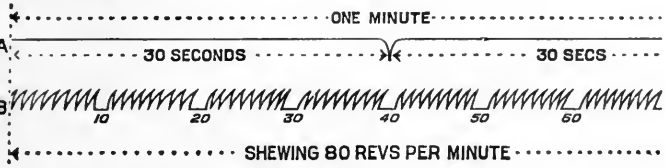

REVOLUTIONS AND TIME DIAGRAMS TAKEN BY THE CIPOLLINA M'INNES-DOBBIE INDICATOR.

To register the time occupied during the test, electrical contact should be made to the two terminals R of an electromagnet, and the other ends of the wires should be attached to a suitable clock, arranged so that a current can pass through it every thirty seconds or every minute, as may be necessary. If it is arranged that contact be made every thirty seconds, then, at this period, the armature with pencil point S is drawn forward by the plate T, as it moves between the magnet poles and the pencil arm. Every forward mark, therefore, indicates thirty seconds of time, and it is a simple matter to compare the two edges of the paper strips, on one of which the time is marked, and on the other edge the number of revolutions, since both are recorded simultaneously.

Advantages of the Cipollina M'Innes-Dobbie Indicator.—(1) The piston is made of steel, specially suited for high pressure or for superheated steam. The piston has a chamber turned in the centre of its length, which serves as the storehouse for the lubricant, and for collecting any grit in the cylinder. The piston-travel is multiplied six times at the pencil point, and the piston-rod is fitted with a stop to prevent injury to the parallel motion, should the pressure for which the spring is suitable be exceeded. The piston-rod is of thin steel tube, thus reducing the total weight of the moving parts as far as possible.

(2) The cylinder, cylinder cap, and coupling ring are sheathed with a special vulcanite preparation, which enables the springs to be changed and the indicator handled without burning the fingers

Errors in Indicators.*—These errors may be due to one or more of the following defects:—

(1) In indicators where the spring is placed inside the cylinder, the stiffness of the spring alters with the temperature of the steam. Also, the average temperature of the spring is not known, and is different in every instance.

* The student who is desirous of investigating the different errors to which some indicators are liable, should study Prof. Osborne Reynolds' paper on "The Theory of the Indicator and the Errors in Indicator Diagrams; also, "Experiments on the Steam Engine Indicator," by H. W. Brightmore, *Proc. Inst. C. E.*, vol. lxxxiii., Part i.; also, *The Testing of Steam Engines and Boilers*, by W. W. F. Pullen (Scientific Press, Ltd., Manchester).

(2) Through defects in the parallel motion arrangement, P M, or in the spiral spring, S S_1, itself, the vertical motion of the pencil is not exactly proportional to the pressure in all positions.

(3) Bad mechanical fitting of the parts, either through bad workmanship or wear and tear of the instrument.

(4) The inertia of the drum or barrel, D, combined with weakness of spring, S S_2; or, the strength of spring, S S_2, combined with the yielding of the cord attached to the cord pulley and reducing arrangement on engine crosshead, sometimes cause too great or too little travel of the drum. In both cases, the motion of the paper on the drum, D, is not an exact reduction of the movement of the engine crosshead.

(5) Friction, whether at the several joints of the parts moved by the piston or between the pencil point, P P, and the paper.

(6) Even, when the cord which is to move the indicator drum, D, is connected to the engine crosshead or piston-rod in such a way, as to copy its motion correctly, the motion of the drum itself may become incorrect, because the length of the cord is not strictly constant.

(7) The inertia of the reciprocating parts should be a minimum.

Reducing Mechanism.—In the first place, it is necessary to have a reducing mechanism, which will give a sufficiently reduced and accurate copy of the engine piston's stroke to the motion of the drum, D. Many arrangements are used for this purpose, such as in some forms of pantograph, whereby a geometrical solution of the problem has been aimed at. It is, however, not unusual to find in actual trials, greater errors than would occur with simpler forms of gear, due to the multiplicity of joints in the mechanism. All reducing gears should be simple in construction, not liable to get out of order or deranged in any way, and should be so arranged, that the string may be led as directly as possible from the crosshead to the indicator.

Mr. Frederick Sargant has invented and patented an electrical device applicable to an indicator, whereby any number of indicators can be operated, and diagrams taken at the same instant of time by closing an electric circuit.

The following figures show several different forms of reducing mechanism, of which Nos. 1, 3, 5, and 9 are simple and good; but the student should note and compare them all, by actual trial:—

It is impossible, within the limits of a general "Text-Book on Steam and Other Heat Engines" of this description, to enter very fully into the many devices, with their respective

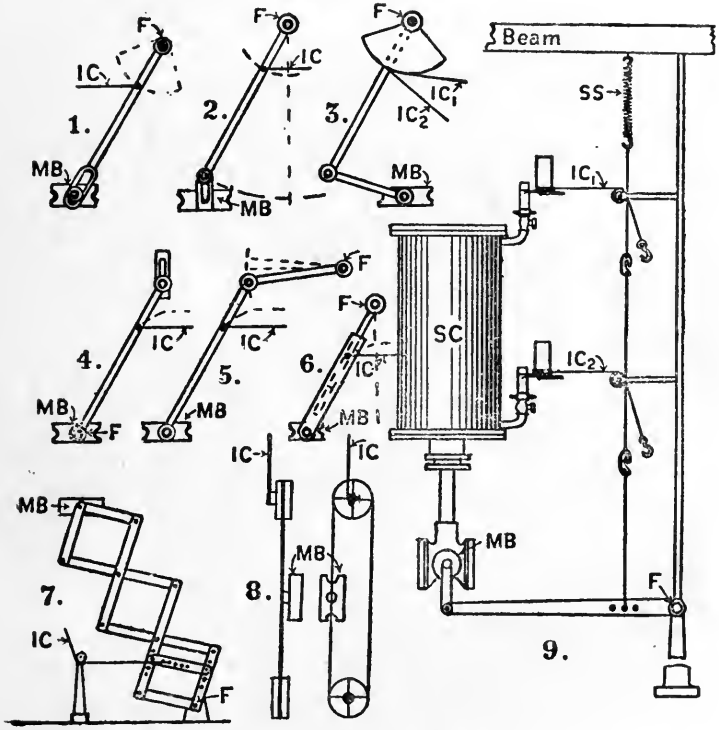

FIG. 4.—DIFFERENT FORMS OF REDUCING MECHANISM FOR STEAM ENGINE INDICATORS.

errors, for reproducing to a convenient scale the movement of the pistons of steam engines.

In most engines a small pipe is fixed outside the cylinders and communicating with both ends. The indicator is attached to this pipe. The pipe is fitted with a two-way cock, so that a diagram may be taken from either end of the cylinder at pleasure. This Fig. 5 shows the method of attaching the indicator to an inverted cylinder marine engine.

Fig. 5.

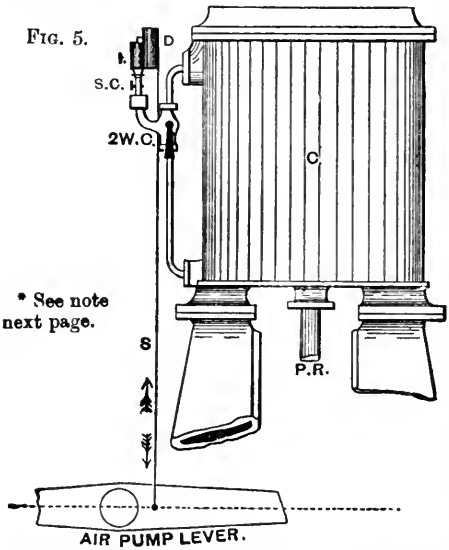

The string or steel wire, S, is attached to the air-pump lever, and its travel must be rather less than the circumference of the drum, D. Before admitting steam into the indicator the "atmospheric line" should be drawn. This is done by turning the steam cock, S C, so that the indicator piston is put into direct communication with the atmosphere through a small hole, and then bringing the arm which carries the pencil up to the rotating *drum*, when a horizontal line is drawn. This line is marked A L, for "Atmospheric Line," on the diagrams throughout this book.

Indicator Diagrams.—Having studied in the previous lecture various effects produced on the theoretical indicator diagram by clearance, lead, compression, release, and such other arrangements as are required in practice for the proper expansion of steam in the cylinder of an engine, we are in a position to examine and comment upon a few indicator diagrams taken from actual practice.

The annexed diagram is taken from a horizontal non-condensing engine (sometimes wrongly termed a high-pressure engine), and, as will be seen, the diagram is exceptionally good. The steam pressure rises almost instantaneously, as shown by the vertical admission line, and is well sustained up to the point of cut-off, the line P C O being perfectly horizontal. At the point of cut-off, C O, a very slight wire-drawing may be seen by the rounded corner, but it is very inappreciable and testifies to the

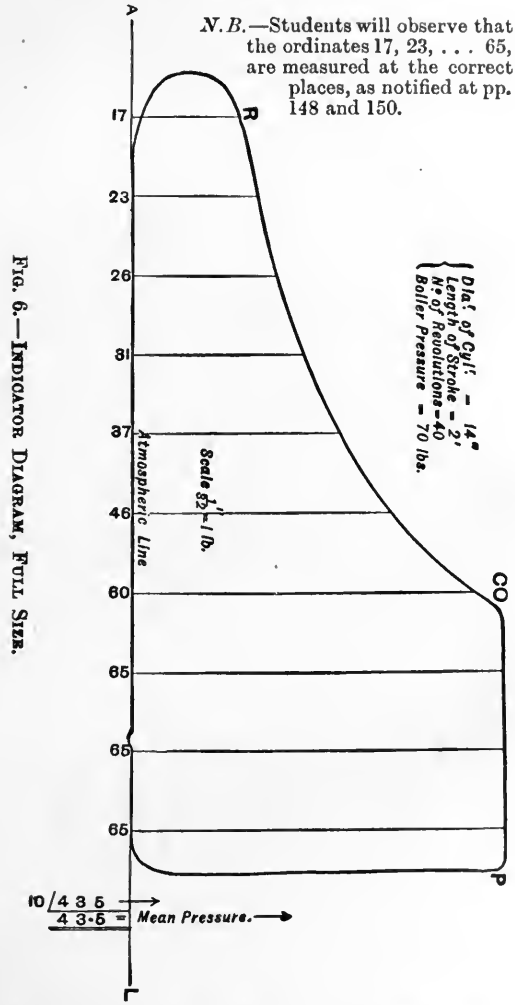

N. B.—Students will observe that the ordinates 17, 23, . . . 65, are measured at the correct places, as notified at pp. 148 and 150.

FIG. 6.—INDICATOR DIAGRAM, FULL SIZE.

NOTE.—The plan of attaching the Indicator to both ends of a cylinder, as shown in the figure on last page, although convenient from a mechanical point of view, is not advisable in the case of long cylinders, or where the pipes are exposed to the cooling action of draughts. To obtain accurate diagrams, the Indicator should be attached directly to each end of the cylinder by a short large pipe, so as not to throttle or condense the steam.

efficiency of the valve gear. The release of the exhaust steam takes place at the point R, but might, with advantage, have been effected a little sooner. The exhausting of the steam is very effectually carried out, as the back pressure falls quite down to

the atmospheric line, A L. The amount of compression shown is too little, and a larger compression would no doubt make the engine work more smoothly at the dead points, for a slight knocking was observable. In this engine, however, the piston speed is very slow, viz., 160 feet per minute, so that a large amount of compression is not necessary.

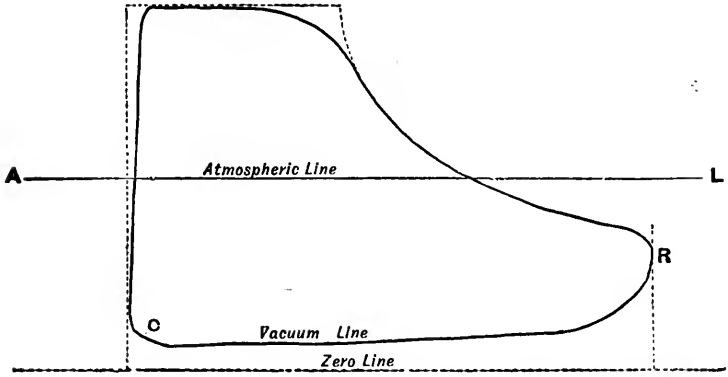

FIG. 7.—DEFECTIVE DIAGRAM FROM A SIMPLE CONDENSING ENGINE.

Defective Indicator Diagrams.*—Fig. 7 is a reduced copy of an actual diagram from a condensing engine. It presents one or two defects which we shall notice briefly. First, the amount of compression is too small and the valve has not had sufficient, if any, lead. The absence of proper cushioning is shown by the very small rounded corner at the point C, and the sloping away of the admission line from the vertical shows that the valve has not been sufficiently open when the piston reached the end of its stroke. Had the valve been set to give more lead, the admission line would have coincided with the vertical dotted line, and it is evident that the non-coincidence of these lines cannot be due to wire-drawing in the steam passages. For, when once the full pressure comes on the piston, it is fully sustained (as shown by the horizontal steam line) until the valve approaches the point of cut-off, when the usual wire-drawing takes place, due to the slow motion of the slide valve, and is clearly shown by the rounded corner on the diagram. Since this diagram is taken from a condensing engine the steam exhausts into a condenser, and the back pressure or vacuum line falls far below the atmospheric line, A L, but release has been given rather late as shown at R, and the exhaust shows contracted opening or wire-drawing, for it slopes down towards the left hand of the figure with gradually diminishing back pressure.

* Students who desire to study the many defects to be found in indicator diagrams and their causes should refer to *Indicator Diagrams with Engine and Boiler Testing*, by Charles Day, Wh.Sc., Published by The Technical Publishing Co., Manchester; *Testing of Steam Engines and Boilers*, by W. W. F. Pullen, Published by The Scientific Publishing Co., Manchester; *The Steam Engine Indicator and Indicator Diagrams*, by W. Worby Beaumont, M.Inst.C.E., The Electrician Series; and Reed's *Engineers' Handbook*.

The next four examples of defective cards are taken from a question set at A.M.I.C.E. Examinations of The Institution of Civil Engineers, where the candidates were asked to point out what is amiss with these four indicator diagrams, and to state the causes of the defects.

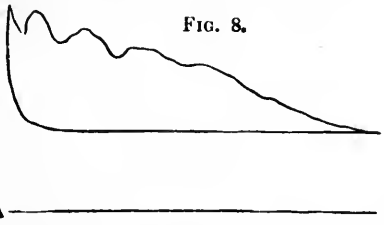

FIG. 8.

Fig. 8 shows up and down oscillations during the time of steam admission which die off gradually during expansion. These oscillations occur when the ratio of the speed of the engine to the stiffness of the indicator's reciprocating steam spring exceeds a certain value. Sometimes these oscillations may be caused or intensified by dirty indicator pistons or friction at a certain part of their stroke. They are, therefore, solely due to want of stiffness in the indicator spring for the speed and the momentum of the moving parts of the indicator. They might be damped by using stiffer springs, but then the diagram might be too small in height; or they might not occur if the moving parts of the indicator were made as light as possible. It is with this object in view that the moving parts in the Crosby and other indicators for indicating fast speed engines are made as light as possible. It will also be observed that the exhaust line is high above the atmospheric line, A L, thus showing that the diagram was taken from the first or high-pressure cylinder of a triple-expansion engine Further, the expansion is carried out to an extreme extent since the pressure in the cylinder falls to that of the back pressure before the end of the stroke.

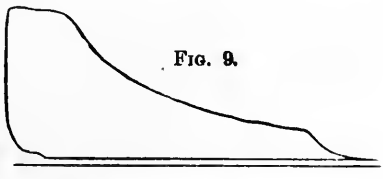

FIG. 9.

Fig. 9.—This diagram is evidently taken, either from a non-condensing engine, or from the H. P. cylinder of a compound engine, since the exhaust line is slightly above the atmospheric line. In either case, the release apparently takes place too soon, as shown by the hollow droop in the right-hand toe of the diagram. This defect may, however, be caused by want of clearance between the parallel motion lever and the curved arm of a Richards indicator. Also, the card would be improved if compression took place sooner. The sudden rise (so ⌝) or hiatus at the commence-

ment of the compression curve, may be due, either to a slight leak in the piston or the slide valve of the engine at this point of the stroke.

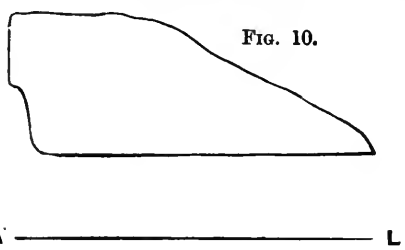

FIG. 10.

Fig. 10.—The *first* peculiarity to be observed in this diagram, is the irregular wavy admission line. This is probably due to the indicator pencil pressing too hard or unevenly upon the drum paper. The second fault shows a bad expansion curve which may be due, either to evaporation of initially condensed steam or to a leaky admission valve. The third and chief defect is seen at the compression corner of the diagram. This is evidently due to a leaky piston. This diagram is obviously obtained from the H.P. cylinder of a compound or triple-expansion engine, as the exhaust line is so high above the atmospheric line, A L.

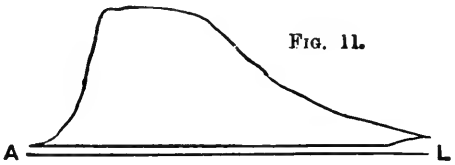

FIG. 11.

Fig. 11.—Looking at the left-hand end of this diagram we see, that there was neither cushioning nor lead. Both of these defects could be remedied by putting the eccentric sheave further forward, so as to give the valve more lead and cut off the exhaust sooner. We also see, that the exhaust release takes place too late, and this would also be remedied by the increased forward angle given to the eccentric. In fact, all the four points of compression, admission, cut-off, and release take place too late. If the engine is a non-condensing one, the back pressure is higher than it need be with a good free exhaust.

Turning now to Fig. 6 in the Appendix to this lecture, we see a very peculiar loop diagram. This kind of card is often obtained from the high-pressure cylinders of Corliss or drop-valve engines, when running on a very light or no external load. The exhaust port is closed almost from the commencement of the return stroke. Cushioning thus takes place to such an extent, that the back pressure rises above that of admission before the commencement of the next stroke, which causes the negative loop on the left-hand upper corner. The method of measuring, by Amsler's integrator, the net area of work done in this case should be studied.

Compound Engine Diagrams.—Diagrams from the cylinders of a compound engine should all be taken at the same time, so that the conditions of boiler pressure, cut-off, &c., under which each diagram is taken, may be the same. Since the pressure of steam in each cylinder is different, springs of different strengths are used in each indicator, and hence the diagrams of different cylinders are all to different scales. From these separate diagrams, therefore, we cannot get much information, except as regards the working of the valves and the amount of work developed by each cylinder. In order to tell accurately the extent of the loss of pressure between each cylinder, and the loss from liquefaction in the cylinders during admission, as well as any abnormal increase of pressure at any point due to re-evaporation or steam jacketing, we require to draw all the diagrams down to the same scale, when the distribution of steam may be clearly seen.

The saturation expansion curve should be plotted out on the same sheet of diagrams, so as to show clearly the variation of the actual expansion from this curve. In combining compound engine diagrams, it is best to take the volume of steam undergoing expansion, as equal to that of one pound of steam at the given pressure, so that all diagrams shall be drawn on the same basis and may be compared with each other. If we do this, we can readily construct the saturation expansion curve from tables without any calculation or geometrical construction. A diagram of the expansion of dry saturated steam can be plotted quite easily, and greatly facilitates the construction of the saturation curve. In this diagram the vertical ordinate represents absolute pressures in lbs. per square inch, while the horizontal abscissa represents the volume in cubic feet of one pound of steam. By its aid—if the volume of steam undergoing expansion is one pound—we can read off the pressure corresponding to any particular volume; and, if we set off this pressure at several different points throughout the stroke, we have only to join those points in order to complete the saturation curve.

To illustrate this important point, we append the diagrams of the compound engines with one high-pressure and two low-pressure cylinders, and the ratio of the joint capacity of the two low-pressure cylinders to the high-pressure cylinder, 3·11 : 1. The steam is cut off at ·46 of the stroke in the high-pressure cylinder, and the volume of the high-pressure cylinder is 116·26 cubic feet. The pressure of the steam is 80 lbs. absolute, and the clearance of each cylinder $\frac{1}{4}$ of the volume of the cylinder.

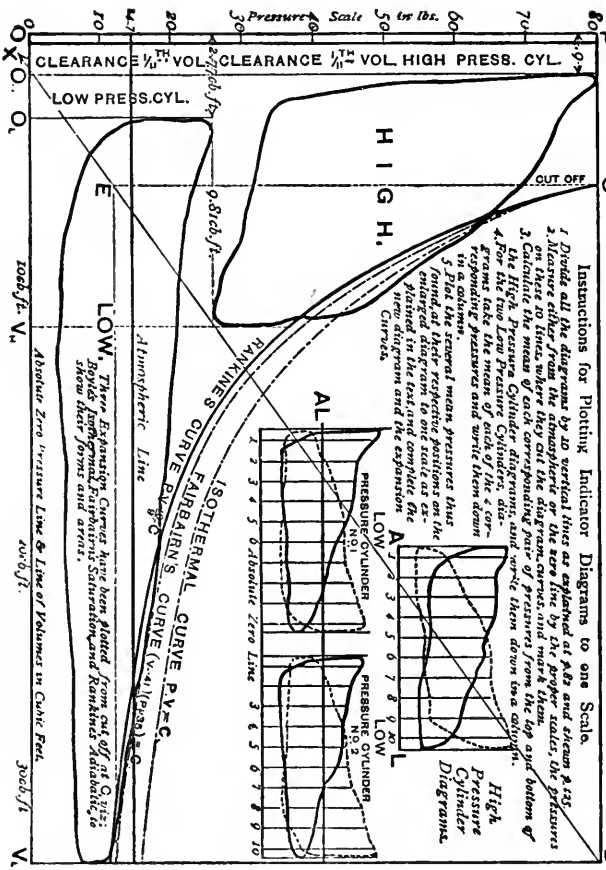
Pressure Scale in lbs.
CLEARANCE 1/10TH VOL.
CLEARANCE 1/11TH VOL. HIGH PRESS. CYL.
LOW PRESS.CYL.
HIGH.
CUT OFF
Instructions for Plotting Indicator Diagrams to one Scale.
1. Divide all the diagrams by 10 vertical lines as explained at A & B and shown at C & D.
2. Measure either from the atmospheric or the zero line by the proper scales, the pressures on these 10 lines where they cut the diagram curves, and mark them.
3. Calculate the mean of each corresponding pair of pressures from the top and bottom of the High Pressure Cylinder diagrams, and write them down in a column.
4. For the two Low Pressure Cylinders, diagrams take the mean of each of the corresponding pressures and write them down in a column.
5. Plot the several mean pressures that you have found at their respective positions in the enlarged diagrams at A & B, and connect the points so obtained in the last and complete the new diagram and the expansion Curves.
LOW.
High Pressure Cylinder Diagrams.
RANKINE'S CURVE PV^1.3 = C
FAIRBAIRN'S CURVE (V+·4)(P+30) = C
ISOTHERMAL CURVE PV = C
Atmospheric Line
Absolute Zero Pressure Line & Line of Volumes in Cubic Feet.
Boyle's Isothermal, Fairbairn's Saturation, and Rankine's Adiabatic, to show their forms and areas.
PRESSURE ON CYLINDER
Absolute Zero Line

FIGS. 12 AND 13.—COMBINED INDICATOR DIAGRAMS.

Quantity of steam used in high-pressure cylr. } = volume of cylr. to pt. of cut-off + clearance.

" " " = vol. of cylr. × ·46 + $\frac{\text{vol. of cylr.}}{11}$

" " " = $116{\cdot}26 \times {\cdot}46 + \frac{116{\cdot}26}{11}$

" " " = 64·04 cubic feet.

The volume of one pound of steam at 80 lbs. pressure may be taken to be 5·4 cubic feet.

$$\left.\begin{array}{l}\therefore \text{ Weight of steam used in high-}\\ \text{pressure cylinder in each stroke}\end{array}\right\} = \frac{64\cdot04}{5\cdot4} = 11\cdot85 \text{ lbs.}$$

$$\left.\begin{array}{l}\therefore \text{ Volume of high-pressure cylr.}\\ \text{per lb. of steam (without clearance)}\end{array}\right\} = \frac{116\cdot26}{11\cdot85} = 9\cdot81 \text{ cubic ft.}$$

$$\left.\begin{array}{l}\text{Clearance of high-pressure cylr.}\\ \text{per lb. of steam used}\end{array}\right\} = \frac{9\cdot81}{11} = \cdot9 \text{ cubic ft. nearly.}$$

$$\left.\begin{array}{l}\text{Volume of low-pressure cylr. per}\\ \text{lb. of steam (without clearance)}\end{array}\right\} = 9\cdot81 \times 3\cdot11 = 30\cdot5 \text{ cubic ft.}$$

$$\left.\begin{array}{l}\text{Clearance of low-pressure cylr.}\\ \text{per lb. of steam used}\end{array}\right\} = \frac{30\cdot5}{11} = 2\cdot77 \text{ cubic ft.}$$

We are now in a position to construct the diagram. Lay off to scale the line, $O V_L$, equal to the volume of the low-pressure cylinder per lb. of steam + its clearance = 30·5 + 2·77 = 33·27 cubic feet, and draw the vertical line, O P, to represent to scale the initial pressure of 80 lbs. per square inch. Measure off $O O_H$ = ·9 cubic feet, and draw a vertical line through O_H; this represents the clearance of the high-pressure cylinder. Now, make $O_H V_H$ = the volume of the high-pressure cylinder per lb. of steam, and divide this space into 10 parts, to correspond exactly with the divisions on the actual indicator diagram. Lay off on these divisions the mean pressures shown by the indicator diagrams, and complete the diagram of the high-pressure cylinder. The diagram of the low-pressure cylinder is reduced in the same way. $O O_L$, represents the clearance, and $O_L V_L$, the volume of the cylinder per lb. of steam, and in measuring pressures the mean of the 4 low-pressure cylinder indicator diagrams is taken.

The construction of the saturation curve from Rankine's formula $P V^{1\frac{1}{4}}$ = constant, or Table II., is extremely simple, since we are dealing with one pound of steam, and the pressure corresponding to any particular volume may be set down at once.

Having now completed our diagram, we have a clear insight into the actual working of the steam in the cylinders of the engine. Evidently a large amount of wire-drawing takes place in the high-pressure cylinder, as is shown by the great fall of pressure before the point of cut-off. The rise of pressure above the saturation curve which takes place during expansion, may partly be accounted for by the action of the steam jacket in re-evaporating.

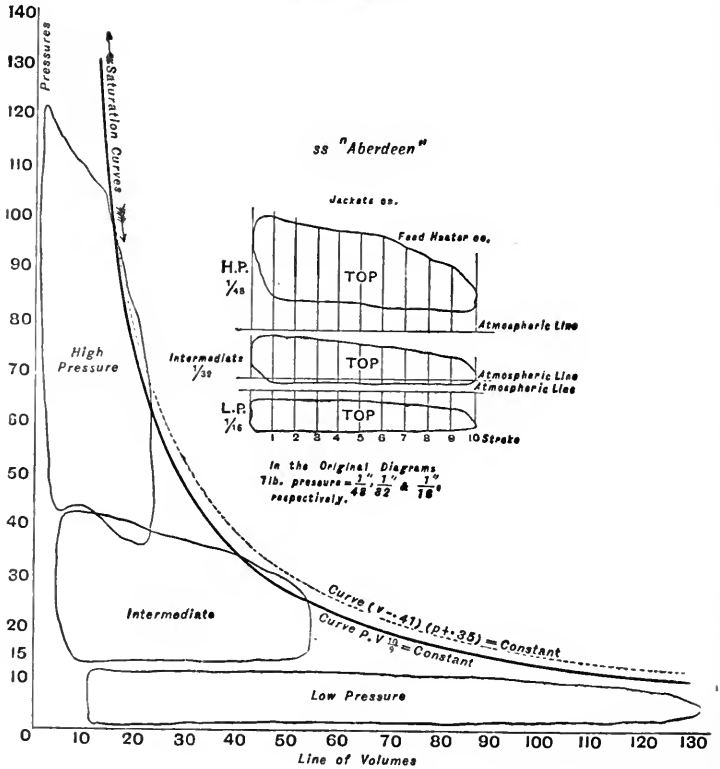

FIG. 14.—COMBINED INDICATOR DIAGRAMS FROM THE TRIPLE-EXPANSION ENGINES OF THE S.S. "ABERDEEN."

Graphic Representation on the Indicator Diagram of the Water present during Expansion.—Professor Ewing in his book on *The Steam Engine* states, that the whole quantity of *steam and water present during expansion*, is the cushioned steam *plus* the "cylinder feed." The quantity of steam which passes through the cylinder per stroke is the weight of steam admitted during each stroke up to the point of cut-off, which he terms the "cylinder feed."

To estimate the amount of cushioned steam, he takes on the indicator diagram a point after compression has begun (*i.e.*, after the exhaust valve has become completely closed), and he notes the pressure and the volume there, remembering that the true volume is the sum of the incompleted portion of the stroke plus the clearance. From this pressure and volume

the quantity of the cushioned steam is readily calculated, *assuming that the steam is simply saturated and that no water is present when compression begins.* As a rule, this assumption is probably correct. Occasionally the cushioned steam may be wet (which would make its weight or amount greater), but in most cases the supposition that the steam is dry when compression begins, may be accepted as involving at least no serious error. The total quantity of steam in the cylinder during expansion is next found by adding the amount of this cushioned steam to the "cylinder feed." A dry saturation curve ($PV^{\frac{17}{18}}$ = constant) can then be drawn on the indicator diagram, to show the volume which this total quantity would fill *if* it were dry and saturated, at each pressure reached during the expansion.

For example, take the following reduced diagram which he took from a small engine of the marine type. Here the line, S S, is the dry saturation curve, which is drawn with the ordinate 0 to 60 lbs. as its origin, to the left of the diagram which the indicator traced, by a distance which represents the volume of the cylinder clearance.

If a horizontal line, A B S, be drawn to intersect the expansion curve at any point B, then A B represents the actual volume which the expanding mixture filled at the pressure O A; and A S is the volume which it would have filled had it been dry saturated steam, whilst B S represents the volume that is lost due to wetness. Hence, the proportion of water in the mixture is sensibly $\frac{B S}{A S}$, and the dryness fraction $x = \frac{A B}{A S}$. Thus, the proportion of water present at any stage of the expansion may be similarly determined.

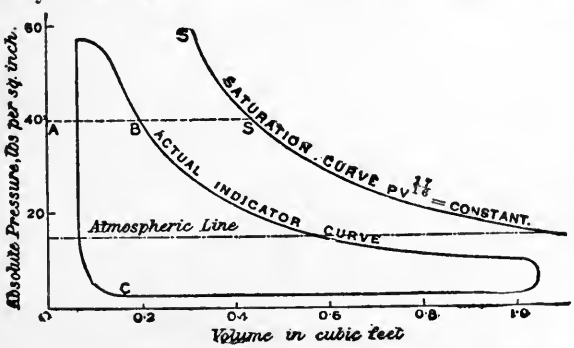

FIG. 15.—REPRESENTING THE QUANTITY OF STEAM AND WATER PRESENT DURING EXPANSION IN A SIMPLE CONDENSING ENGINE.

In the engine in question he found, that the amount of "cylinder feed" per single stroke was 0·0404 lb. The pressure at the compression point, C, was found to be 4 lbs. per square inch absolute and the volume was 0·12 cubic foot. Since the volume of 1 lb. of steam at that pressure of 4 lbs. is 90·4 cubic feet, it follows, that the amount of cushioned steam was 0·0013 lb. This gives a total of 0·0417 lb., for which the saturation curve, S S, was drawn. By measuring values of B S/A S at points along the curve, it was found that the proportion of water in the mixture was 52 per cent. at cut-off, then increased to about 55 per cent. during the early stages of expansion, became less, and finally sank to 37 per cent. just before release took place.

The student will note from this actual case, that in small unjacketed engines the amount of water present in steam at and immediately after the point of cut-off may be fully 50 per cent. of the weight of dry steam taken from the boiler. This fact is not generally recognised or understood by steam users, but it most undoubtedly accounts for the great benefits derived from so superheating steam, that it shall remain *perfectly dry* up to the point of cut-off, or even to the end of the stroke.

When dealing with compound engine diagrams, Prof. Ewing says, it is better to modify the construction of the previous figure by separating the cushioned steam from the cylinder feed and drawing the diagram for the latter. The reason for this modification is, that the amount of cylinder feed is the same for both or all the cylinders, whereas the amounts of cushioned steam may be different in each cylinder. This allows a combined diagram to be drawn for the several cylinders along with one saturation curve.*

It will be observed, that this new method has not been followed in Figs. 12-14; for *there*—as is usual in ordinary marine practice—the saturation curves have been drawn on the assumption that the steam was dry at the point of cut-off; and further, that the amount of substance which is taking part in the expansion is the same in the different cylinders. Consequently, a single saturation curve cannot properly apply to all the cylinders unless the above method be followed. In fact, the proper position of the saturation curve for each cylinder of these two engines should be further to the right hand by the amount of liquified steam in each cylinder.

Gain in Lbs. of Steam per I.H.P. due to Superheating.†—It will

*See *Proc. Inst. C.E.*, vol. xcix., 1889-90, for Prof. Osborne Reynolds' paper on "Tests of the Triple-Expansion Engines" at Owens College, Manchester.

†I am indebted to Mr. E. A. Reynolds, M.A., of Messrs. Willans & Robinson's Scientific Staff, Rugby, for the original curves from which Figs. 16 and 17 have been reproduced, and to his paper on "The Economy of Superheated Steam" recently read and discussed before the Rugby Engineering Society for certain data.

Data.	Simple Non-condensing Engine.	Compound Condensing Engine.	Triple Condensing Engine.
Indicated horse-power, . . .	17·15	346	315
Mean pressure in lbs. reduced to the low-pressure cylinder, . .	38·64	50	35·55
Revolutions per minute, . .	450	350	360
Steam pressure in lbs. by gauge, .	65	154	162
Cut-off, ...	·3 to ·45	...	...
Vacuum in inches, ...	...	27	26·2

be both interesting and instructive at this stage to consider the actual gain in the weight of steam required by a certain class of engine due to superheating the steam to different degrees F. above that of dry saturated steam of the same pressure. It will be seen from an examination of the three curves in Fig. 16

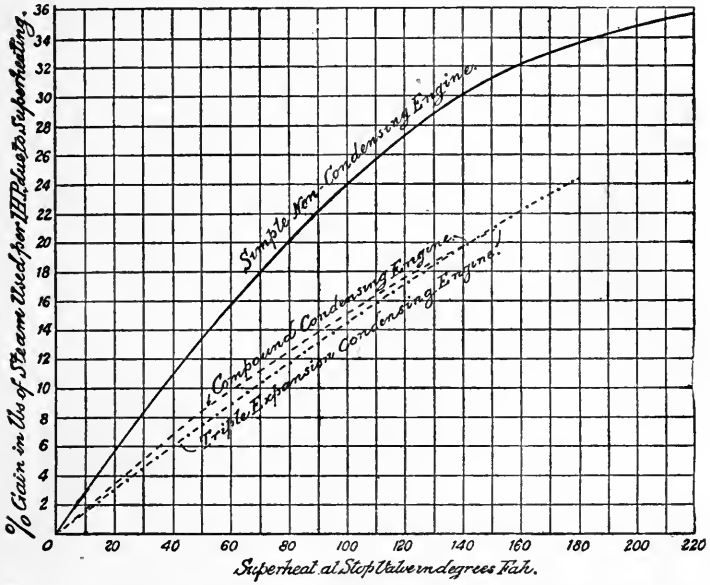

FIG. 16.—CURVES SHOWING THE PERCENTAGE GAIN IN FEED-WATER, OR STEAM USED PER I.H.P.-HOUR DUE TO SUPERHEATING THE STEAM, WITH MESSRS. WILLANS & ROBINSON'S SIMPLE, COMPOUND, AND TRIPLE-EXPANSION ENGINES.

that the percentage gain in the feed-water supplied to the boiler or in steam used, increases much more rapidly with the simple non-condensing engine (up to a certain degree of superheat) than with either the compound or the triple-expansion engine. The author is sorry that he has not got the data for the simple condensing engine. It is evident, however, that the curve for such an engine would lie on the diagram somewhere between that of the curves for the simple non-condensing and the compound-condensing engines; because, it might be taken as a general rule, that the greater the economy which an engine showed without superheating, the less would be the percentage gain by aid of superheating.

It will be observed from the inclination of the curves, that a quicker increase of gain was obtained at the lower degrees of superheat than at higher temperatures. This leads to the conclusion that there is not much gain *as a whole* by superheating steam to a higher degree before it enters a cylinder, than will just enable it to exhaust in a *dry condition* from that cylinder. Consequently, it would appear from this fact, and also from the other circumstances to be referred to later on, that instead of applying such a high degree of superheat as, say, 200° F., to high-pressure steam before it enters the first or high-pressure cylinder of multiple-expansion engines, it would be better to simply superheat at first, by 100° to 150° F., and then to reheat the exhaust steam from each cylinder by just the required amount; except, of course, the last or low-pressure exhaust, which is in connection with the condenser. From Mr. Reynolds' tests it appears, that very little difference in percentage gain was obtained with triple-expansion over that of the same class and power of compound engines with the same initial steam pressures and the same superheats. The gain in each case varied, of course, with the point of cut-off, or ratio of expansion. But, taken generally and roughly, it appears, that for a fixed cut-off in all the cylinders, the consumption lines at different degrees of superheat form a series of convergent straight lines, as shown by Fig. 16. Under these circumstances, it may be considered, that a simple non-condensing engine using superheated steam, could be made to work as economically as a condensing one at the same revolutions and power, when supplied with dry saturated steam. Also, a simple condensing engine should be equal to a compound one, and that it would be scarcely worth while to employ triple-expansion engines as far as economy, simplicity, and sweet working was concerned, when their extra complication, first cost, and upkeep was taken into consideration. If the superheat were high enough to let the steam be still dry at the exhaust of the intermediate cylinder of a triple-expansion engine, then the same economy in steam could be obtained by using a compound engine with a correspondingly early cut-off to give the same expansion. Of course, with the triple, there would be less exchange of heat between the metal of the cylinders and the steam than in the compound engine, due to the smaller range of temperature in each of the three cylinders. This would, however, entail perhaps an inconveniently high initial temperature in the first cylinder, and hence, as we said before, it would be better to reheat the steam in the intermediate receiver. This may be done by passing live, highly superheated steam, through

a coil fixed in the intermediate receiver on its way to the first cylinder steam chest, which it would enter at a conveniently lower degree of superheat.

Gain in B.T.U. per I.H.P. Due to Superheating.—Results given in lbs. of water per I.H.P.-hour when using superheated steam are misleading, from the fact, that such a statement does not take into account the extra heat units imparted to the steam by superheating it. It has been suggested that a better comparison would be the number of lbs. of coal burned in the boiler furnace per I.H.P.-hour. But, it is well known, that coal varies much in calorific value, and boilers in efficiency. Consequently, this common but somewhat rough and ready method should be discarded when accurate and scientific comparisons have to be made. A more exact method would be to give the total heat units supplied to the water per I.H.P.-hour. In applying this method it is generally assumed, that the feed-water is at, say, 100° or 200° F. These are, however, mere arbitrary feed-water temperatures, which might be specially applicable to certain installations, but could not be recognised as fixed standards. The author, however, believes, that if the results were reckoned in B.T.U. supplied to the feed-water from 32° F. or from 212° F., a fair and uniformly applicable start could then be made from one or other of these two fixed temperatures. It would be most convenient to start from water at the higher fixed temperature of 212° F., because, as we saw in a previous lecture, the evaporative efficiency of boilers is reckoned by the lbs. of water which they generate into steam from and at 212° F.

Taking the case of the simple non-condensing Willans & Robinson's engine, it was found that when using steam of 65 lbs. pressure per square inch by gauge, or 80 lbs. absolute in the steam chest, with a cut-off at ·3 of the stroke, a gain of 35 per cent. in the weight of steam resulted by superheating it 200° F., with a consumption of only 20 lbs. of steam per I.H.P.-hour. (See the uppermost curve in Fig. 17.) Now, if 35 per cent. were the gain in this case, due to superheating, what would be the lbs. of steam per I.H.P.-hour, at the same pressure, cut-off, and revolutions per minute, when supplied with ordinary dry saturated steam? Here, 100 per cent. – 35 per cent. (gain) leaves 65 per cent. used when superheated, what weight of steam would be required when it was saturated? Hence—

(Superheated) : (Saturated) : : (Weight superheated) : (Weight saturated).

$$65\,\% \;:\; 100\,\% \;::\; 20 \text{ lbs.} \;:\; x \text{ lbs.}$$

$$\therefore \; x = 30{\cdot}8 \text{ lbs.}$$

At 80 lbs. pressure absolute, reckoned from 32° F., the number of B.T.U. per lb. of this steam is 1,177 (see Steam Table II.). Subtracting from this total the sensible heat units per lb. of feed-water between 32° F. and 212° F. we get (1,177 - 180) = 997 B.T.U. This quantity multiplied by 30·8 (the lbs. of steam required per I.H.P.-hour), gives 30,707·6 as the total B.T.U. from and at water of 212° F. But the steam was superheated by 200° F., and assuming the specific heat of such steam to be 0·48; then (0·48 × 200) = 96 B.T.U. per lb., which, if added to the above 997, gives 1,093 B.T.U. per lb. of superheated steam.

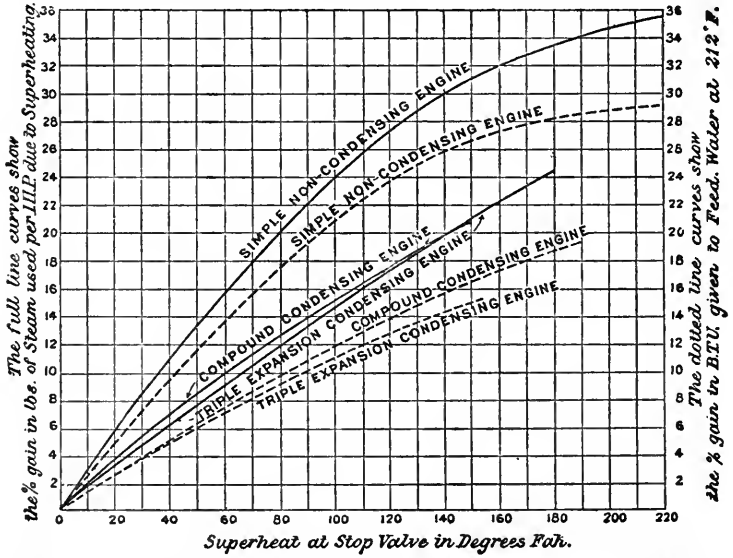
The full line curves show the % gain in lbs. of Steam used per I.H.P. due to Superheating.
The dotted line curves show the % gain in B.T.U. given to Feed-Water at 212° F.
SIMPLE NON-CONDENSING ENGINE
SIMPLE NON-CONDENSING ENGINE
COMPOUND CONDENSING ENGINE
COMPOUND CONDENSING ENGINE
TRIPLE EXPANSION CONDENSING ENGINE
COMPOUND CONDENSING ENGINE
TRIPLE EXPANSION CONDENSING ENGINE
0 20 40 60 80 100 120 140 160 180 200 220
2 4 6 8 10 12 14 16 18 20 22 24 26 28 30 32 34 36
Superheat at Stop Valve in Degrees Fah.

FIG. 17.—CURVES SHOWING THE PERCENTAGE GAIN IN B.T.U. GIVEN TO FEED-WATER, AS WELL AS THE PERCENTAGE GAIN IN STEAM USED PER I.H.P.-HOUR DUE TO SUPERHEATING IN WILLANS & ROBINSON'S SIMPLE, COMPOUND, AND TRIPLE-EXPANSION ENGINES.

Consequently, since 20 lbs. of such steam was used, (20 × 1,093) = 21,860 B.T.U., as the total heat units in the superheated steam required per I.H.P.-hour, hence:—

B.T.U. B.T.U.

30,707·6 : 21,860 :: 100 % : y %.

$\therefore \quad y = 71{\cdot}2$ %.

Or, (100 per cent. − 71·2 per cent.) = 28·8 per cent., which is the net calculated gain when reckoned in B.T.U. added to feed-

water from 212° F. due to superheating, instead of the previously measured 35 per cent. gain in lbs. of steam used per I.H.P. In all cases, as shown by Fig. 17, it will be found that the difference between these two systems of estimating the gain due to superheating, increased with the superheat. When testing engines using superheated steam, it will be found interesting and instructive to plot down curves of their percentage gains by both methods.

The author has put the previous proportion sums into a simple formula for ascertaining the percentage gain in B.T.U. given to feed-water due to superheating in the following way.*

Let H_{su} = Heat units per lb. of superheated steam from temp. of feed-water to temp. of superheat.

,, H_{sa} = Heat units per lb. of saturated steam from temp. of feed-water to temp. due to pressure, p, in lbs. per square inch absolute at the steam chest.

,, W_{su} = Weight of superheated steam used per I.H.P.-hour at the stop-valve pressure, p, and temp. of superheat.

,, W_{sa} = Weight of saturated steam used per I.H.P.-hour at pressure p.

$$\text{Then, Percentage gain in B.T.U. due to superheat} \Big\} = 100 - \left(\frac{100\, H_{su} \cdot W_{su}}{H_{sa} \cdot W_{sa}}\right).$$

But, $H_{sa} = (H - S)$ (see Lectures VII. and IX.).

Where H = Total heat in B.T.U. per lb. of feed-water from 32° F., as found from Table II. on "The Properties of Saturated Steam," up to and at pressure p.

And, S = Sensible heat in B.T.U. per lb. of feed-water from 32° F. to temp. of feed, t_f°. Or, $S = (t_f^\circ - 32°)$.

Also, $H_{su} = H_{sa} + H_\sigma t_{su}^\circ$ (see Lectures IV., VII., and XI.).

Where H_σ = 0·48 the specific heat of steam and t_{su}° = superheat at steam chest in degrees Fah.

Substitute these values in the above formula :—

$$\text{Then, \% gain} = 100 - \left\{\frac{100\,[H - (t_f^\circ - 32°) + H_\sigma\, t_{su}]\, W_{su}}{[H - (t_f^\circ - 32°)]\, W_{sa}}\right\}.$$

Taking the same test and values as in the previous example for the simple non-condensing engine, where p = 80 lbs. ; H = 1,177 B.T.U. ; t_f° = 212°; H_σ = ·48 ; t_{su}° = 200° ; W_{su} = 20 lbs.; and W_{sa} = 30·8 lbs.

$$\text{Then, \% gain} = 100 - \left\{\frac{100\,[1{,}177 - (212 - 32) + \cdot 48 \times 200]\,20}{[1{,}177 - (212 - 32)]\,30{\cdot}8}\right\}.$$

$$\text{Or, \% gain} = 100 - \left\{\frac{100\,[997 + 96]\,20}{997 \times 30{\cdot}8}\right\} = 100 - 71{\cdot}2 = 28{\cdot}8.$$

* This formula was devised by Professor Jamieson for the discussion on Mr. F. J. Rowan's paper on "Superheated Steam." See *Proc. Inst. Engs. and Shipbuilders in Scotland*, vol. xlvii., February, 1904.

The gain in B.T.U. is therefore 28·8 per cent., as found before and from the test of Willans & Robinson's simple non-condensing engine, with a superheat of 200° F.

It will be seen, that the only variables in this simple formula are t'_{su} and W_{su}. Consequently, a constant can easily be found for the other values. The various calculations can, therefore, be quickly worked out for one complete set of trials at different degrees of superheat, their results marked on squared paper, a mean curve drawn through them, and comparisons made with tests of the same or of other engines for any agreed-upon temperature of the feed-water.*

The Effects of Raising the Superheat on the Indicator Card and on the Economy of Steam.—As an illustration of these effects, we reproduce the two mean indicator cards obtained by Prof. Ewing during his 1899 tests of the Schmidt superheater plant, to which we referred in the previous lecture when dealing with the "History of Superheating." The engine was a horizontal, single-acting one, with two side by side cylinders and the cranks at 180° apart. The pistons were 70·9 inches diameter, with a stroke of 11·8 inches, and a speed of about 175 revolutions per minute. The engine was made to work against a brake, and the B.H.P. was measured simultaneously with the I.H.P. The exhaust steam was collected in a surface condenser at atmospheric pressure, whilst the condensed water was weighed as well as the feed-water. The feed-water was 5 per cent. greater

* "The (1898) Report of the Committee on the Thermal Efficiency of Steam Engines," appointed by The Institution of Civil Engineers, states :—

"(1) That the statement of the economy of a steam engine in terms of pounds of feed-water per I.H.P. per hour is undesirable.

"(2) That for all purposes, except those of a scientific nature, it is desirable to state the economy of a steam engine in terms of the thermal units required per I.H.P. per hour (or per minute), and that if possible the thermal units required per brake H.P. should also be given.

"(3) That for scientific purposes the thermal units that would be required by a perfect steam engine working under the same conditions as the actual engine should also be stated.

"The proposed method of statement is applicable to engines using superheated steam as well as to those using saturated steam, and the objection to the use of pounds of feed-water, which contain more or less thermal units according to conditions, is obviated, while there is no more practical difficulty in obtaining the thermal units per I.H.P. per hour than there is in arriving at the pounds of feed-water.

"For scientific purposes the difference in the thermal units per I.H.P. required by the perfect steam engine and by the actual engine shows the loss due to imperfections in the actual engine.

"A further great advantage of the proposal is that the ambiguous term 'efficiency' is not required."

DATA REFERRING TO FIG. 18 AND INDICATOR CARDS.

Data.	Low Degree of Superheat.	High Degree of Superheat.
Pressure of steam by gauge in lbs. per square inch at stop valve,	110	126
Temperature of steam close to engine,	494° F.	640° F.
Amount of superheat in Fah. degs. close to engine,	185° F.	320° F.
Revolutions per minute,	176	177
Load on brake in lbs.,	280	320
Brake horse-power,	15·54	18·33
Weight of steam in lbs. condensed per revolution,	0·0399	0·333
,, ,, ,, B.H.P.-hour,	26·5	19·4

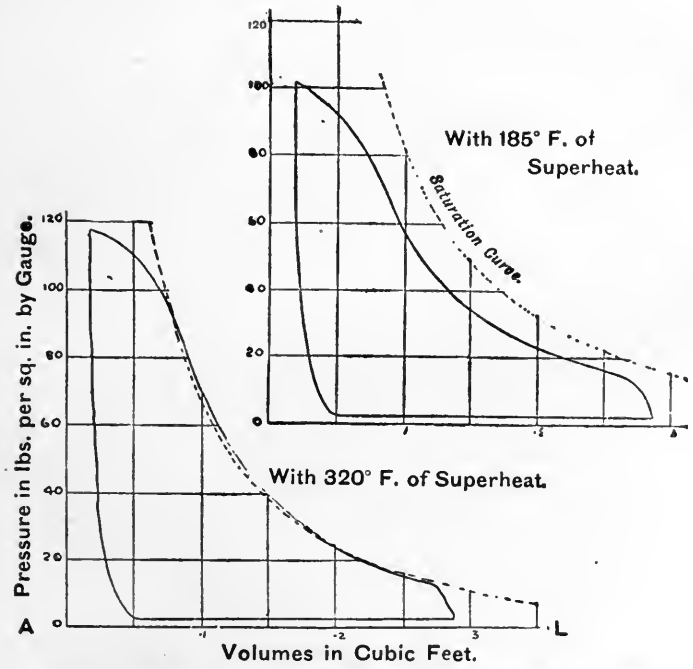

FIG. 18.—INDICATOR CARDS FROM THE SAME ENGINE WITH TWO DIFFERENT DEGREES OF SUPERHEAT.

than the exhaust steam collected in the condenser. This was probably due in part to the leakage of steam past the piston rings through the open ends of the cylinder.

In the upper diagram, the pressure between the stop valve and the inside of the cylinder fell from 110 to 102 lbs., whilst the steam in the cylinder is shown to be wet throughout, by the distance between the saturation curve and the expansion side of the card. Also, the steam contained about 24 per cent. of water at cut-off and about 18 per cent. of water just before release.

In the lower diagram, the pressure between the stop valve and the inside of the cylinder fell from 126 to 118 lbs., whilst the steam in the cylinder remained dry and almost coincides with the saturation curve throughout the expansion. It is very little superheated during the early stage of the expansion, whilst it becomes saturated shortly before release. It therefore appears, in this small open-ended, unjacketed engine, with a cut-off at about $\frac{1}{5}$ of the stroke, that the cooling action of the cylinder walls is such, that a superheat of 320° F. only suffices to make the steam dry at cut-off and to keep it so during expansion. Whereas, a superheat of 185° F. does not prevent the steam from containing no less than 24 per cent. of water at cut-off, due to initial condensation and other causes.

This lesson, to engineering students, is a startling revelation, and shows most conclusively, that although the thermo-dynamic efficiency of *highly superheated steam* is relatively small, yet the benefits derived therefrom are chiefly threefold:—(1) The prevention of initial condensation; (2) the prevention of alternate condensation and re-evaporation in the cylinder; (3) that, with such leaky moving parts as trunk pistons, plain pistons, steam and exhaust valves without springs, the leakage of steam past these sliding surfaces is much less with highly superheated steam than with medium superheats, or with dry saturated steam. The B.H.P. increased nearly 18 per cent. with far less than this increase in mean steam pressure. This is, however, not the best result which Professor Ewing obtained from an engine using highly superheated steam on the Schmidt system, for in 1903 he got the remarkable figure of 9 lbs. of steam per I.H.P.-hour.

APPENDIX TO LECTURE XVI.

The Planimeter.*—It is frequently necessary for engineers to ascertain the areas, and mean lengths or breadths of irregular flat figures, such as plans of properties, countries, ships, and diagrams of work done by engines, dynamos, and other machines. In order to explain how such areas and mean heights may be obtained by aid of this instrument, we shall first of all describe the construction and action of Amsler's Planimeter and the method of reading its scales.

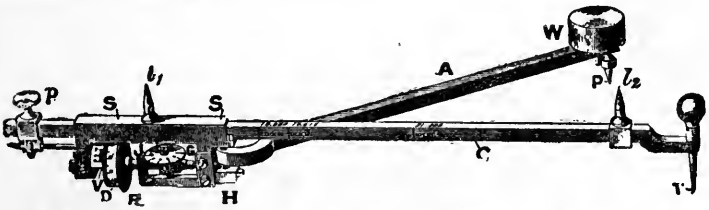

FIG. 1.—AMSLER'S PLANIMETER AND ITS RECORDING MECHANISM.

Amsler's Planimeter.—From Fig. 1, it will be seen that this instrument consists of two metallic arms or bars, **A** and **C**, hinged together at **H** on the sleeve, **S**. One arm, **A**, carries, at its free end, a weight, **W**, and a needle point, **P**, which acts as a fixed pivot for the instrument. The other arm, **C**, carries a tracing point, **T**, with which the outline of any figure to be measured is traced, whilst the third supporting point consists of the roller, **R**, on which the whole freely moves over the diagram.

By referring to the enlarged Fig. 2, the details of the counting mechanism will be better understood. The roller, **R**, carries a drum, **D**, which is graduated to record the *area* traced by the point, **T**. There is also a set pin, *p* (Fig. 1), with adjusting nut and screw, by which the arm, **C**, may be fixed to the sleeve, **S**, at any desired position to give a convenient scale.

---

* I am indebted to the Crosby Steam Gage and Valve Company's *American Indicator Pocket-Book* for four of the first five figures in this article. There are many kinds of planimeters or integrators of areas, as will be seen from a perusal of Prof. Hele Shaw's paper on "Mechanical Integrators," read before the Inst.C.E. (see *Proc.*, vol. lxxxii., paper No. 2,063). I have chosen the Polar Planimeter, invented by Prof. Amsler-Laffon, for description here, because it is the one now most commonly used by engineers for ascertaining the areas and mean pressures of engine indicator diagrams.

Recording Mechanism.—The *second* figure shows in detail the recording mechanism of the planimeter. The drum, **D**, of the roller-wheel, **R**, is divided into 10 equal and larger parts numbered 1 to 10. Each part or number represents *one* square inch for a certain position of **C** in **S** as shown at **K**. The distances between each of these 10 numbers are subdivided into 10 equal parts, each one of which represents *one-tenth* of a square inch. The vernier, **V**, has 10 divisions, each of which is one-tenth less than any of the 100 on **D**. Consequently, if one division on **V** exactly coincides with another on **D**, the distance—counted from zero—represents so many *hundredths* of a square inch.

The graduated wheel, **G**, is geared to the roller, **R**, in such a manner as to rotate once for *ten* revolutions of **R**. The face of this wheel is divided by radial lines into *ten* equal and numbered parts, each one of which represents *ten* square inches. It therefore indicates the revolutions of the roller wheel, **R**.

Method of Reading the Scales.—Now, supposing that a certain area has been measured from zero, the result may be read off as follows:—

(1) Find the numbered radial line on **G** (Fig. 2) which has just passed the mark line on the fixed arm, **J**. Say it is 1. This represents *ten*.

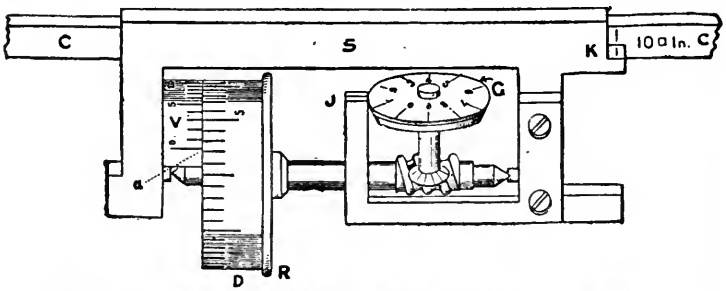

FIG. 2.—RECORDING MECHANISM OF AMSLER'S PLANIMETER.

(2) Find the number on the drum, **D**, which has passed zero (or 0) on the vernier, **V**. Let this be 4. This represents 4 *units*.

(3) Further, let the number of subdivisions over 4 be 7, as shown by the dotted line, *a*. This 7 therefore represents $\frac{7}{10}$ or ·7.

(4) Find the graduation number on the vernier, **V**, which exactly coincides with a division line on **D**. Let this be the *third* one from zero. It therefore represents 3 *hundredths*.

Then, as a whole, we have 14·73 square inches as the complete reading which represents the full area of the figure that has been traced in outline by the point, **T**.

If the movement of the roller wheel, **R**, had been 3 one-hundredths *less*, its seventh graduation would have coincided with the zero of the vernier, **V**, and the reading would then have been 14·70 instead of 14·73.

Directions for Using Amsler's Planimeter.—This planimeter is a precise and delicate instrument. It should be handled and kept with great care in order that it may be depended upon to give accurate results.

It is also necessary to have a *flat, even, unglazed surface for the roller wheel,* R, *to travel upon.* A piece of dull finished cardboard will serve the purpose very well.

To find the Area of a Figure with the Planimeter.—(1) Place the instrument on the drawing in the position shown graphically by Fig. 3, so as to allow perfect freedom of motion in every direction in which it requires to move. Place the weight at P, and press the needle-point down gently, so that it will just stick to that place.

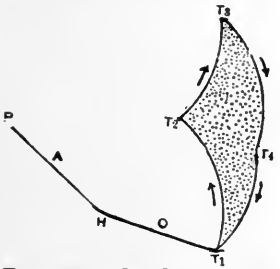

FIG. 3. — TO SHOW HOW AREAS ARE TRACED AND FOUND BY THE PLANIMETER.

(2) Put the point of the tracer, T, upon any given point in the outline of the figure. Do not waste time in attempting to set the scales to zero, but take the *initial* reading, as previously directed, wherever they happen to stand. Follow the outline of the figure carefully with the tracer-point, T, by moving it in the direction indicated by the arrows until it returns to the starting point. That is, move from T_1 to T_2 to T_3 to T_4 back to T_1. Then the scales must be read off for the *final* reading, and the difference of the two gives the area, *provided* P *lies outside the figure.*

N.B.—Great care must be taken to have the instrument *in its proper position* for tracing the outline of the figure before taking the *initial* reading. Also, the *final* reading should be taken as soon as the tracing is completed, because the least movement of T will change the result.

To measure Indicator Diagrams with the Planimeter.

1. *To obtain the Area in Square Inches.*—By referring to Figs. 1 and 2, it will be observed that there are vertical numbered marks on the front side of the bar, C. Now, when set-pin, *p*, is slackened, the bar, C, may be pulled out or pushed through the sleeve, S, until the line mark, K, on the right hand of S is opposite to a vertical numbered mark on the side of C. For example, if we desired to measure the area of the diagram in square inches, the line at K should be brought fairly opposite the line marked 10 square inches on C; because, one complete revolution of the roller, R (which is 2·5 inches in circumference), will indicate 10 divisions or 10 square inches on its drum, D. Then tighten the set-pin, *p*. The exact distance between the tracing point, T, and the hinge, H, will now be 4 inches—*i.e.*, the radial length of the arm, C, is 4 inches, and the distance between the two upper pointed pins, l_1 to l_2, will also be 4 inches.

Now, by running clockwise round the diagram with T (as indicated by the arrows in Fig. 4, in the manner previously described), the difference between the *initial* and *final* scale readings will indicate the area of the diagram in square inches—

For, (Length of arm, C) × (Circumference of R) = Area of diagram.

4″ × 2·5″ = 10□ inches.

The accuracy of the instrument to indicate square inches, may be tested by drawing exact fine line squares of 1, 2, or 3 inches sides, and passing T carefully along them clockwise. When straight lines have to be followed, a thin straight rule may be placed close alongside of them to guide T.

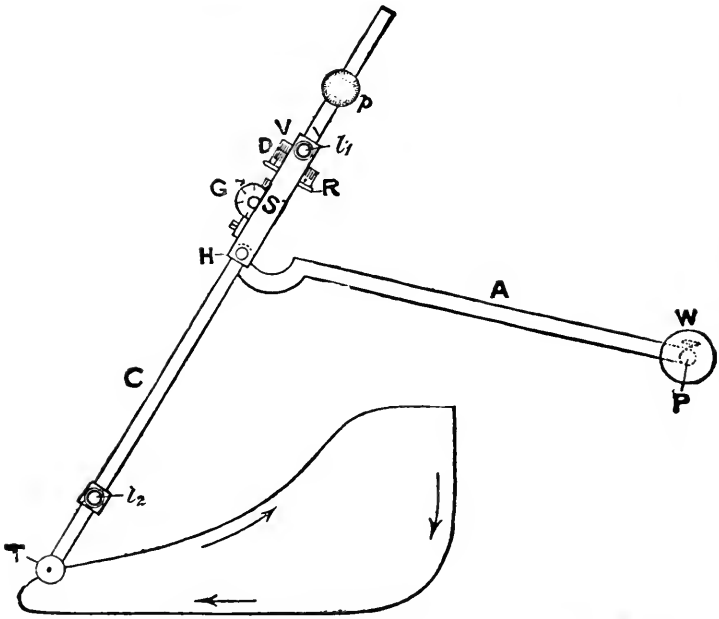

FIG. 4.—FINDING THE AREA OF AN INDICATOR DIAGRAM.

2. *To obtain the Average Height or Mean Pressure of a Diagram.*—(*a*) Slacken the set-pin, *p*, and push in or pull out the bar, **C**, until the two steel points, l_1 (on the upper side of the sleeve, **S**) and l_2 (on the upper side of the bar, **C**), exactly divide off the length of the diagram between them along the atmospheric line, or parallel to it, as shown by Fig. 5. The

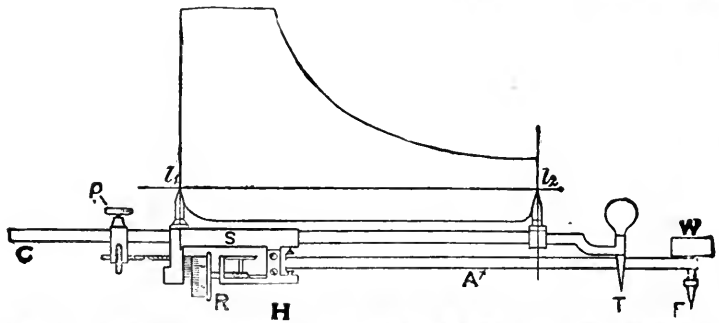

FIG. 5.—FINDING THE MEAN PRESSURE FROM AN INDICATOR DIAGRAM.

final adjustment is made by the little nut and screw seen under the pin, *p*, in Figs. 1 and 5, *after* the set pin is tightened. With this adjustment, the figures on the counting disc, G, represent *hundreds*, those on the roller disc, D, *tens*, and each of its finer 100 divisions *units*, whilst the vernier, V, will give the decimals.

(*b*) Place the instrument in the position shown by Fig. 4, and trace the outline of the diagram as previously directed. The difference of the readings will be its *average height* in fortieths of an inch.*

Since, (Average height of diagram) × (Length of diagram) = Area of diagram.

And, (Net motion of roller, R) × (Distance, l_1 to l_2) = ,,

∴ (Net reading on D) × (Arm, C, or H T) = ,,

Since the distance between l_1 and l_2 is always equal to length of arm, C, or H T.

∴ *Average height of diagram = Net reading on* D.

Suppose, that after measuring the diagram, we read from the figures on the roller disc, D, and its intermediate divisions, and from the vernier, V, also, 3, 5, and 2 respectively. Then, we have 35·2 fortieths of an inch, which, divided by 40, gives ·88 of an inch as the average height. This, multiplied by the scale of the spring used (which in this case we assume to be 60 lbs. per lineal inch), gives 52·8 lbs. as the *mean effective pressure* per square inch on the engine piston area. A simple method is to multiply the reading by the *factor* corresponding with the scale of the spring, which, for a 60-lb. spring, is (60 ÷ 40) = 1·5.

Or, *Mean pressure per square inch* = 1·5 (mean height of diagram).

3. *To obtain the Mean Effective Pressure of Looped Diagrams.*—When taking indicator cards of engines, instances occur where the back pressure line rises above the forward pressure line, due to excessive compression. Then, part of the indicator diagram is positive while the other part is negative, as shown in Fig. 6, by the hatched and unhatched portions respectively. Consequently, we must have the area of the unhatched portion deducted from that of the hatched portion when the mean effective pressure is calculated. In order that the planimeter should effect this deduction automatically, the tracer-point, T, should be caused, in traversing the loops and lines, to move upon every portion of them in the same direction as that in which they were drawn upon the paper by the indicator-pencil.

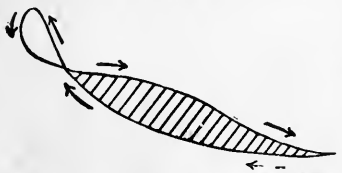

FIG. 6. — FINDING THE MEAN EFFECTIVE PRESSURE FROM A LOOPED DIAGRAM.

* Since the roller, R, is 2·5 inches in circumference, and its scale on drum, D, is divided into (10 × 10) 100 equal parts, each of these fine divisions must represent (2·5 ÷ 100) = $\frac{1}{40}$ inch.

Mathematical Explanation of Amsler's Planimeter.—The simplest and clearest mathematical explanation of Amsler's Planimeter which I have seen, is to be found in *The Philosophical Magazine*, vol. xlviii., Fourth Series, by F. P. Purvis. I have altered his index letters to correspond with those indicating the same parts in the previous figures and added Fig. 10 to illustrate the latter part of his explanation.

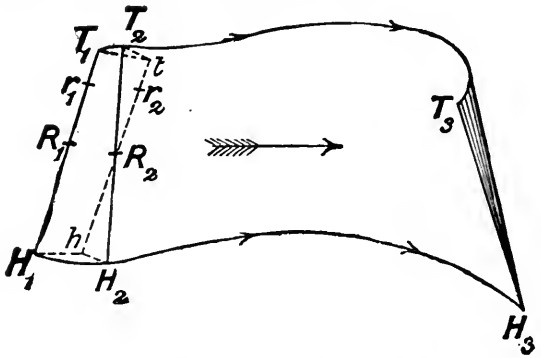

FIG. 7.—TO FIND THE TRAVEL OF A SIMPLE BAR, T_1H_1.

Suppose that the instrument consisted simply of the straight bar, T_1H_1, of length, l, carrying a pencil at each end, T_1 and H_1; and, suppose any lines, T_1T_2 and H_1H_2, to be traced out by these two pencils. Then, let us consider how the area, $T_1T_2H_2H_1$, may be expressed in terms of the length, l, of this bar, and the motion of some point in the same.

Let the motion from T_1H_1 to T_2H_2 represent an elementary motion of the bar, the centre of it R_1, moving from R_1 to R_2, and the bar turning about R_2 through the angle $(d\theta)$. Let (dn) be the normal distance from R_2 to T_1H_1. This motion may be considered to take place in two parts:—

1st, the motion of T_1H_1 parallel to itself into the position, th.

2nd, the motion of T_1H_1 when at th about R_2 into the position, T_2H_2. The required area, $T_1T_2H_2H_1$ (in this elementary motion), is equal to the area, T_1thH_1. But this area is also equal to $l(dn)$, since the area, R_2T_2t = the area, R_2H_2h, and the areas, T_1T_2t and H_1H_2h, are negligible with respect to $l(dn)$, being the product of two infinitesimal quantities, while $l(dn)$ is the product of one infinitesimal quantity (comparable with each of the two just mentioned) and the finite quantity, l.

Integrating for the whole area, $T_1T_3H_3H_1$, we see, that it is expressed by $(l \times n)$, where n is the travel of the point, R_1, normally to the bar, T_1H_1.

Now, we may obtain that normal motion, n, by centring a wheel on the bar at R_1, free to revolve in the plane at right angles to T_1H_1, and resting at its circumference on the paper. That, n, is given by the circumferential motion of this wheel, may be seen by again considering the elementary

motion of the bar from $T_1 H_1$ to $T_2 H_2$. While the bar moves from $T_1 H_1$ to $t h$, the wheel turns through the normal distance from R_2 to $T_1 H_1$. While the bar turns about the point, R_2, the wheel remains stationary.

If, instead of centring the wheel at R_1, we centre it at any other point, say r_1, which may be at a distance, m, from R_1, then its circumferential travel for the elementary motion will be the normal length from r_2 to $T_1 H_1$, or $(d n) - m (d \theta)$. And, for the whole motion from $T_1 H_1$ to $T_3 H_3$, the travel will be $(n - m \theta)$, where θ = the inclination of $T_3 H_3$ to $T_1 H_1$.

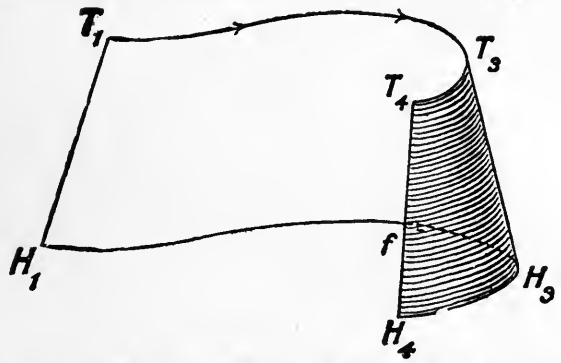

FIG. 8.—SHOWING RETROGRADE MOTION OF THE BAR FROM $T_3 H_3$ TO $T_4 H_4$.

If a retrograde motion be now given to the instrument, bringing it into the position, $T_4 H_4$, the product $(l \times n)$ will still equal the area included between the two curved lines ($T_1 T_3 T_4$ and $H_1 H_3 H_4$) and the two straight lines ($T_1 H_1$ and $T_4 H_4$). Part of this area is shown negative, or, $(l \times n) = (T_1 T_3 T_4 f H_1 - f H_3 H_4)$. If, instead of allowing H_1 to take any path, $H_3 H_4$, we constrain it to move only along the line already traced, while T_1 traces out a new line, $T_3 T_4$, then the negative area will be nil and the

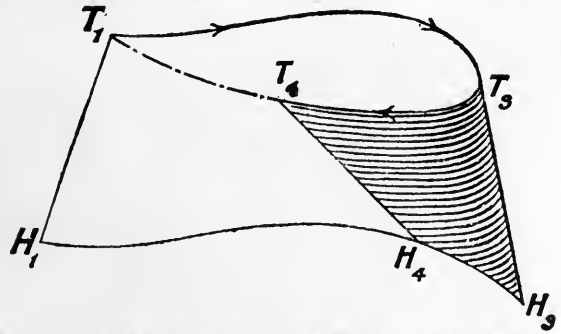

FIG. 9.—CONSTRAINED MOTION OF ONE END, H_1, OF THE BAR, $T_1 H_1$.

product $(l \times n)$ will equal the area, $T_1 T_3 T_4 H_4 H_1$. If this motion be continued, H_1 being always kept in the path, $H_3 H_4 H_1$, until $T_1 H_1$ occupies

its initial position, the product $(l \times n)$ will equal the area, $T_1T_3T_4T_1$, whatever be the nature of the line, $H_1H_4H_3$. Also, for the whole motion $\theta = 0$, so that the circumferential travel of the wheel at r_1 is equal to n, and is entirely independent of the value of m. Now, in Amsler's planimeter the point, H_1, is constrained to move in the arc of a circle, while the pencil, T_1, is traced round the contour of the required area. This is simply a limitation of the more general and previous case, and, it is clearly shown by Fig. 10, where the points, H_1, H_2, H_3, &c., move to and fro along the arc of the circle whose radius is PH_1, whilst the tracing point, T, describes the figure, $T_1T_2T_3T_4$, back to T_1.

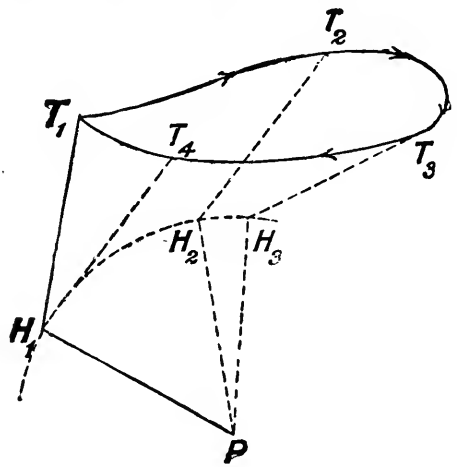

FIG. 10.—END, H_1, OF ARM, T_1H_1, IS CONSTRAINED TO MOVE ALONG THE ARC OF A CIRCLE.

Also, the wheel whose travel is measured, is placed away from the centre of the bar; in fact, on the opposite side of H_1, but, as we have seen, its position, so long as its centre is on the line, T_1H_1, is quite immaterial, for its motion in the aggregate is the same as if it were placed at R_1.

In the planimeter the length, l, is capable of variation. By setting it differently, the same graduation on the wheel will give areas in different units, the unit of area being always $l \times$ the circumferential travel of the wheel required to alter its reading by unity.

Those who are anxious to now study the mathematical proofs, as well as popular explanations of this and other kinds of integrators may consult:—

(1) *British Association Reports*, 1872, p. 401, for Sir Frederic Bramwell's paper.

(2) *The Philosophical Magazine*, vol. xlviii., 4th series, July, 1874, for a paper by Sir F. P. Purvis, Wh.Sc., &c.,

(3) *Proc. Inst. C.E.*, vol. lxxxiii., 1885, for paper on "Mechanical Integrators," by Prof. Hele Shaw.

(4) *Proc. Inst. Junior Engineers*, Dec., 1902, for Mr. W. J. Tennant's paper on "The Planimeter Explained without Mathematics."

LECTURE XVI.—QUESTIONS.

1. Sketch in section and plan Watt's original indicator. Describe the instrument and show how it was applied to obtain the mean pressure in a steam cylinder.

2. Sketch and describe concisely the Crosby indicator. Point out how and why it differs from other indicators with which you are acquainted.

3. Draw the normal indicator diagram of a condensing engine, and trace the changes in outline produced by the principal causes which may, in practice, detract from the efficiency of the engine.

4. Describe and sketch any one form of steam engine indicator with which you are acquainted. Why are modern indicators made more rapid in their natural vibrations and what means are taken to effect this object? What sort of errors do we expect to find when an engine-driver takes diagrams, and what are they due to? (S. & A., 1897, Adv.)

5. The barrel of an indicator is 2 inches in diameter, and it vibrates through $\frac{2}{3}$ of a revolution. The area of the diagram is $3\frac{3}{4}$ square inches, and the motion of the pencil is 3 times that of the indicator piston. Taking the mean pressure of steam to be $17\frac{1}{2}$ lbs. per square inch, find what force corresponds to a motion of 1 inch of the spring. *Ans.* 67·5 lbs. nearly.

6. Sketch and describe an indicator for an engine of 250 revolutions per minute. Why are its requirements different from those for an engine running at 80 revolutions per minute? Show how it is connected up and how a diagram is taken. (S. & A., 1898, H., Part i.)

7. Enumerate the several errors to which indicators are liable. Why should the inertia of the moving parts of an indicator be a minimum?

8. Sketch and describe the several methods of obtaining the reduced motion of the piston when taking indicator cards. State which you consider to be the best arrangements for giving good results, and why?

9. Give a clear, concise description of how you would take the indicator diagram of an engine, giving the necessary sketches to illustrate your answer. How would you attach the indicator to the engine cylinder, and why?

10. A non-condensing engine is using steam at 42 lbs. per square inch above the atmosphere—the length of the stroke is 3 feet, and steam is cut off at $\frac{1}{3}$ stroke—draw an approximate diagram (scale $\frac{1}{24}$) marking points of release and compression, and showing the direction of motion of the piston by arrows. Find, by calculation, the mean pressure. *Ans.* 24·9 lbs.

11. Draw indicator diagrams as commonly given in a double-acting engine, (1) of the condensing type, (2) when non-condensing.

12. Draw the ordinary indicator diagrams as obtained (1) from the top, (2) from the bottom of the cylinder of a single-acting condensing engine, and account for the difference in form of the respective diagrams.

13. Show effects of wire-drawing and of clearance upon an indicator diagram. What is the object of a steam-jacket? In what way does the absence of the jacket affect the indicator diagram?

14. Show by sketches and explain the effects on an indicator diagram of (1) deficiency of lead; (2) deficiency of outside lap; (3) contracted long steam passages; (4) initial condensation; (5) leaky admission valves; (6) leaky piston; (7) too much inside lap; (8) leaky condenser.

15. Explain and indicate on separate diagrams, by comparison with the normal indicator diagram, the effect of (1) wire drawing on the admission of steam, (2) wire-drawing on the exhaust side, (3) a leaky slide-valve,

(4) a leaky piston, (5) the cushion pressure exceeding the pressure of the initial steam. In the last case, how is the area of the diagram calculated? Further, if the dimensions of the parts and proportions of the slide-valve are correct, but (*a*) the fixing of the valve on the valve-spindle is incorrect, (*b*) the angle of advance of the eccentric is too small, and (*c*) the angle of advance of the eccentric is too great, what would be the effect separately of (*a*), (*b*), (*c*) on the working of the engine, and show their effect on the indicator diagram.

16. Suppose you took an indicator diagram from a high speed engine going at 400 revolutions per minute and found the admission and the expansion line to be an up and down wavy line like Fig. 8 in this lecture. To what would you attribute this defect, and what would you do in order to obtain a smooth firm outline?

17. Explain the operation of combining the indicator diagrams of work done in a compound cylinder engine, the object being to produce the diagram which would have been obtained if the steam had performed the same work by going through the same changes of pressure and volume in one cylinder.

18. A compound condensing engine with cranks at right angles has cylinders of 20 inches and 35 inches diameter with 3 feet stroke. The high-pressure cylinder has a clearance of $\frac{1}{10}$ and the low-pressure one of $\frac{1}{12}$ of the volume of their respective cylinders. Dry saturated steam of 100 lbs. absolute is admitted to the high-pressure cylinder and is cut off at $\frac{1}{4}$ stroke, whilst the cut-off in the low-pressure cylinder is at $\frac{1}{2}$ stroke. Let both cylinders be well jacketed and the vacuum 28 inches. Draw the probable indicator diagrams and find the mean pressure in each cylinder. Plot down a combined diagram with the probable correct position of the saturation curve and attach a scale of pressures and volumes to your figure.

19. In a single acting engine it is necessary to take one indicator diagram from above and another from below the piston. Sketch each diagram in juxtaposition so as to form a single compound diagram, and explain generally the reasons for the different outlines of the diagrams. To what cause do you attribute the space between the diagrams?

20. How would you ascertain from an indicator diagram the probable percentage of condensed steam at cut-off and during expansion.

LECTURE XVI.—A.M.INST.C.E. QUESTIONS.

1. What are the chief sources of error to be guarded against in the taking of indicator diagrams? How would you test the accuracy of the spring?

2. It was ascertained by a consumption trial that a steam engine working with dry saturated steam required 13 lbs. of feed-water per I.H.P. per hour, and that another engine using superheated steam required 10 lbs. of feed-water per I.H.P. per hour. Does the ratio 13 : 10 compare the thermal economy of these two engines, and, if not, how would you make the comparison?

3. Draw the compression part of the indicator diagram of a steam engine cylinder from the following data:—Exhaust pressure, 15 lbs. per square inch absolute. Exhaust valve closes at 0·3 of the stroke. Clearance volume is 7 per cent. of the volume swept by the piston. Explain how you draw the curve.

4. Sketch what you would consider to be a good indicator diagram for the H.P. cylinder of a receiver compound engine assuming—

Admission pressure, . .	160 lbs. per square inch absolute.
Exhaust pressure, . .	40 ,, ,,
Cut-off, ...	0·3.

5. Explain fully the reasons why a compound engine is more economical than a simple one. Do these reasons apply with greater force in a condensing engine than in a non-condensing engine, and, if so, why?

6. Illustrate each of the following defects in a steam-engine diagram by drawing a reasonable indicator diagram in which it occurs:—(1) Late admission, (2) too early release, (3) throttled admission, (4) excessive compression, (5) badly-adjusted indicator.

7. In a slow-running compound engine with a large ratio of expansion, what precautions would you take against condensation in the cylinders? Explain clearly how the precautions you propose would effect their object.

8. Draw a reasonable indicator diagram showing late admission. Explain what is the cause of this defect, and how you would remedy it so as to avoid unduly disturbing the distribution at the other points of the stroke, if the valve is driven by a simple eccentric.

9. Calculate the number of foot-pounds of work done per cubic foot of steam at a pressure of 120 lbs. per square inch (absolute) when expanded four times and exhausted against a back pressure of 3 lbs. per square inch (absolute) in a non-conducting cylinder having a clearance of 5 per cent. of the working volume. (The cubic foot includes the clearance volume.) You may assume hyperbolic expansion, and that there is no compression, and, further, that release takes place at the end of the stroke. *Ans.* 38,660 ft.-lbs.

10. Explain the effect of clearance upon the economy of an engine. Illustrate your answer by diagrammatic sketches, and state approximately the amount of clearance in the cylinders of any triple-expansion or compound engine of which you have experience.

11. Mention any three of the more usual defects in indicators running at high speeds and show the effect of each upon the pressure-volume diagrams drawn by them. State concisely what precautions you would take to avoid adding to these defects by faulty adjustment of the indicator.

12. Write a brief account of the use of superheated steam. An engine of 500 I.H.P., under a working pressure of 150 lbs. per square inch absolute and a feed temperature of 80° F., uses 18 lbs. of steam per I.H.P. hour; when the steam is superheated to 700° F., it uses 11 lbs. per I.H.P. hour; express the saving as a percentage of the original consumption. *Ans.* 30·1 per cent.

LECTURE XVII.

CONTENTS.—Nominal and Indicated Horse-Power—Rule for finding the Indicated Horse-Power of an Engine—Formula for finding the Mean Pressure—Brake Horse-Power—Prony Brake or Absorption Dynamometer—Society of Arts Rope Dynamometer—Advantages of the Rope Brake—Tests of Small Engines with the Rope Brake—Questions.

Horse-Power.—The unit of power which is universally adopted by mechanical engineers in this country is that which was proposed and used by Watt—viz., *the horse-power*.

The steam engines introduced by Watt, were employed to a large extent in doing work which had formerly been done by horses, and hence it became necessary for him to be able to state the number of horses to which his engine would be equivalent in power. Watt estimated the power of the strongest London horses as about equal to that required to raise 33,000 *lbs. one foot high in one minute*, and he adopted this as his standard of power. This estimate, however, is too large, the average power of a horse being only about 22,000 foot-pounds* per minute, but Watt seems to have been desirous that his engines should exceed, rather than fall short of, their nominal power.

What is, therefore, technically spoken of among engineers as a *horse-power*, is the rate of doing work corresponding to 33,000 foot-pounds per minute, and the power of steam engines is always calculated on this basis.

Watt found that in his engines, he usually obtained a mean pressure of about 7 lbs. per square inch in the cylinder, and he estimated the power of his engines by assuming that value for the mean pressure. The horse-power thus estimated, he termed the *nominal* horse-power, and in practice that power was actually obtained. When, however, increased steam pressures came into general use, the mean pressure of steam in the cylinders could no longer be correctly taken as 7 lbs., and the nominal horse-power differed largely from the actual horse-power. In commerce the term nominal horse-power had been so much used, that commercial men understood the size, and, therefore the value, of an engine much better when its nominal horse-power was spoken of than its actual power, and, therefore, the term

* The foot-pound is the unit of work, and is the work done by a force of one pound acting through the space of one foot.

was retained for a long time, and even yet is still used for some classes of engines, such as those used for agricultural purposes. However, as unfair competition often takes place between different manufacturers, owing to the use of this term, it is fast falling into disuse and should be altogether abandoned.

The actual power exerted in the cylinder of an engine, cannot be obtained until we know the actual mean pressure of steam in the cylinder. In order to ascertain this, we must take a diagram from the cylinder by means of the indicator which was described in the last Lecture. The horse-power obtained by this means is termed the *indicated* horse-power, and when the horse-power of engines is spoken of, it is the indicated horse power (I.H.P.) which is understood unless otherwise stated.

The diagram at p. 229 is taken from a horizontal non-condensing engine, and from it we wish to find the mean pressure of steam in the cylinder. To do this, divide* the diagram into ten equal parts, by aid of the parallel ruler accompanying the indicator, then read off the pressures at the *centre* of each space or division, as described at p. 150, and shown by the vertical lines in Fig. p. 229, by means of the scale corresponding to the indicator spring. The sum of these pressures divided by 10 gives the mean pressure during one stroke. This is shown worked out on the diagram, the mean pressure in this case being 43·5 lbs. per square inch. Now the work in foot-pounds done by an engine in one minute is = total mean pressure on the piston in lbs. × distance in feet travelled by piston in one minute. But one horse-power is equal to 33,000 foot-pounds per minute.

Therefore, the horse-power exerted by an engine is = *total mean pressure on the piston in lbs.* × *distance in feet travelled by the piston in one minute* ÷ 33,000.

Let p denote the mean pressure of steam in lbs. per square inch.
" A " the area of the cylinder in square inches.
" L " the length of the stroke in feet.
" N " the number of strokes per minute = revolutions × 2.
" H P " the horse-power.

Then, total mean pressure on the piston in lbs. = $A\,p$,
also, distance in feet travelled by piston in one minute = $L\,N$.

$$\therefore \text{ the horse-power of the engine } = \frac{A\,p\,L\,N}{33{,}000}.$$

This formula is easily remembered, since it may be written so as to form the word "PLAN," *thus:—Horse-power* = PLAN ÷ 33,000.

* This method would, of course, be used only when a planimeter is not available.

† In all cases, the area of the piston-rod has to be taken into account. For example, where the piston-rod comes out at the crank end of the cylinder only, then A *should be total area of cylinder less half the area of the piston-rod.*

Applying our formula to find the horse-power of the engine from the diagram and data given in it, we get

$$\text{H P} = \frac{\text{A}\,p\,\text{L N}}{33{,}000} = \frac{153{\cdot}9 \times 43{\cdot}5 \times 2 \times 80}{33{,}000} = 32{\cdot}45.$$

The diagram only gives the mean pressure on one side of the piston; but in practice it is usual to take the mean of two diagrams—one taken from each end of the cylinder. If there be two or more cylinders, the power developed in each has to be added together, in order to obtain the total horse-power.

If the student refers to questions 16, 17, 18, and 19 at the end of this Lecture, he will observe that he is given in each case the pressure of the steam on admission to the cylinder, the position of cut-off, *and the hyperbolic or napierian logarithm of the ratio of expansion*, as well as the diameter or the area of the cylinder, and the length of the stroke; from which, he is expected to calculate the net or effective work done in one stroke, or else the indicated horse-power when the number of revolutions per minute is stated. We shall first of all show how the hyperbolic logarithm is to be applied, in order to ascertain the mean total

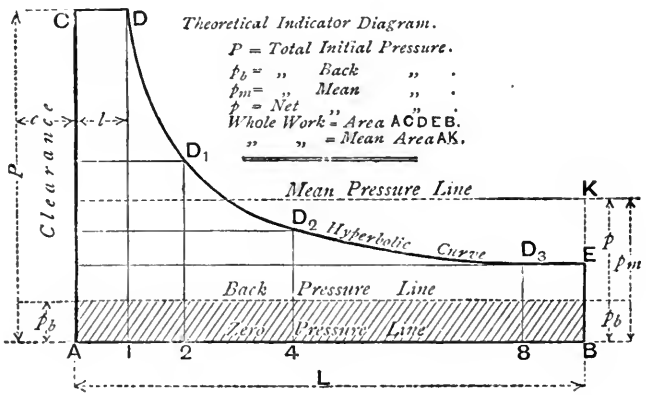

pressure throughout the stroke, *on the assumption that the steam expands according to Boyle's Law, neglecting clearance;* and secondly, we shall take into account the effect of clearance.

Students, whose mathematical studies have not advanced sufficiently far to enable them to understand the integral

calculus, will not be able to follow why it is that these hyperbolic logarithms come into the problem. They should for the present accept the formula as correct.

Referring to the last theoretical indicator diagram, ACDEB, the area of the rectangle, A D, is the product of the pressure line, A C, and the volume line, C D, or, A 1, to the point of cut-off, and therefore this area, A D, expresses the *whole* work done upon the piston by the steam in entering and in occupying that part of the cylinder before cut-off takes place; further, since the steam is supposed to expand in accordance with Boyle's Law ($p\,v = a$ constant), the curved line, D E, is a hyperbolic or isothermal curve, and the hyperbolic area, 1 D E B, expresses the *whole* work done by the steam during expansion—*i.e.*, after cut-off takes place. This latter area, 1 D E B, and consequently the *whole* work done during expansion, may be calculated by taking advantage of the known relations of hyperbolic curve areas to their base lines.*

For, if the base lines

A 1, A 2, A 4, A 8, &c.,

increase in the following geometrical progression,

as 1, to 2, to 4, to 8, to &c.,

then the successive areas,

— $1\,D_1$, $1\,D_2$, $1\,D_3$, &c.,

increase in the following arithmetical progression,

as — to 1, to 2, to 3, to &c.

For example:—

Let the area or volume, A D, up to the point of cut-off, be expressed by, 1, and the areas or volumes due to the expansion of the steam by the following numbers in geometrical progression:—

1, to 2, to 4, to 8, to &c.

* On the principle of logarithms, which represent in arithmetical progression natural numbers in geometrical progression, tables of hyperbolic logarithms are compiled to facilitate the calculation of the areas of work done due to various degrees of expansion. The hyperbolic logarithms are specially indicated or distinguished from common logarithms in formulæ by the small Greek letter ϵ, thus log.$_\epsilon$, and a few of these hyperbolic logarithms have been selected and printed on p. 269 in order to enable students to work any of the ordinary questions.

The hyperbolic logarithms of these numbers are (see table, p. 269)

·000, ·693, 1·386, 2·079, &c.,

being as 0, to 1, to 2, to 3, to &c.,

or in arithmetical progression; therefore, the *whole* work done by a quantity of steam expanded successively from the initial volume, 1,

being as 1, to 2, to 4, to 8, to &c.,

will be in the proportions of

1, to 1 + ·693 to 1 + 1·386 to 1 + 2·079 to &c.,

or as 1, to 1·693 to 2·386 to 3·079 to &c.

Or generally if, r, be the ratio of expansion the whole work done will be as $(1 + \log._{\epsilon} r)$, showing that for an expansion of eight times, the initial work done by the steam before cut-off takes place, is tripled for that number of expansions by the end of the stroke. It is necessary, however, to deduct the work spent against the back pressure (due to an imperfect vacuum reckoned from the absolute zero or perfect vacuum line), before we obtain the net or effective work done by the steam in one stroke.

Another method of reasoning out the foregoing principle is as follows (see last figure):—

Let P = the initial pressure of steam in lbs. on the square inch at the cylinder, reckoned from absolute zero or perfect vacuum line, or = A C.

p_m = the mean pressure in lbs. on the square inch throughout the stroke, also reckoned from absolute zero.

A = area of cylinder in square inches.

L = whole stroke, A B, in feet.

l = distance in feet to point of cut-off, or C D.

$\frac{L}{l} = r$ = ratio of expansion, neglecting clearance.

x = any distance from commencement of stroke between the limits, $x = l$ and $x = L$.

Then the whole work done through distance, l, = A P l, foot-lbs.

Pressure of steam at any point, x, = $\frac{A P l}{x}$.

$\therefore$ The work done through any very small space $dx = \frac{\text{A P } l}{x}\, dx$.

The whole work done during expansion—*i.e.*, from point of cut-off to the end of the stroke, or from where $x = l$ to where $x = \text{L}$ is.

By integral calculus,

$$= \text{A P } l \int \frac{dx}{x} = \text{A P } l \log_{\cdot} \frac{\text{L}}{l} = \text{A P } l \log_{\cdot} r, \text{ foot-lbs.}$$

$\therefore$ The whole work done during one stroke,

$$= \text{A P } l + \text{A P } l \log_{\cdot} r = \text{A P } l\,(1 + \log_{\cdot} r).$$

And the total horse-power, if N = number of strokes per minute,

$$= \frac{\text{A P } l \text{N } (1 + \log_{\cdot} r)}{33000},$$

The total forward mean pressure, p_m, indicated by the vertical height, p_m, is therefore found by dividing the above whole work done during one stroke by the area, A, and by the length of the stroke, L,

$$\text{or } p_m = \frac{\text{A P } l}{\text{A L}}(1 + \log_{\cdot} r) = \frac{\text{P } l}{\text{L}}(1 + \log_{\cdot} r) = \frac{\text{P}}{r}(1 + \log_{\cdot} r).$$

And if p_b = the mean back pressure indicated by the vertical height, p_b, in the last figure, or by the shaded portion above the line, A B; and p, = the net or effective mean pressure throughout the stroke, then—

$$p = p_m - p_b = \frac{\text{P}}{r}(1 + \log_{\cdot} r) - p_b \text{ lbs. on the square inch.}$$

And the Net or Effective Horse-power

$$= \text{A L N} \frac{\left\{\frac{\text{P}}{r}(1 + \log_{\cdot} r) - p_b\right\}}{33000}$$

These formulæ take no account of the wiredrawing of the steam between the boiler and the engine, or in the steam ports, neither have the effects of clearance, compression, &c., been taken into account. They must not therefore be used in determining

the size of any particular engine, because large allowances have sometimes to be made for these effects in actual practice; but as we wish to explain the application of the formulæ apart from these considerations, we shall apply them to three examples, and thus lead up to the final formula.

1st. Take the case of p. 148, Watt's diagram of work. Here P = 1 atmosphere, or say 15 lbs. absolute, for Watt at the time of his devising his diagram of work only used steam of atmospheric pressure, and thus all work was done in his engines at that time, solely by means of the vacuum. The ratio of expansion, $r = 5$, since steam was cut off at $\frac{1}{5}$ of the stroke, and he took no account of back pressure, thus supposing the vacuum to be perfect—

The mean pressure,

$$p_m = \frac{P}{r}(1 + \log._{\epsilon} r) = \frac{15}{5}(1 + 1{\cdot}609). \quad \text{See p. 269 for logs.}$$

$$p_m = 3 \times 2{\cdot}609 = 7{\cdot}827 \text{ lbs., or } {\cdot}52 \text{ of an atmosphere,}$$

which corresponds with that found by Simpson's or ordinary rule (see p. 149).

2nd. Take the case at p. 149, where the pressure of steam may also be supposed to be that above a perfect vacuum and no back pressure was mentioned.

P = 100 lbs. absolute, $r = 4$, as steam was cut off at $\frac{1}{4}$ stroke;

∴ mean pressure,

$$p_m = \frac{P}{r}(1 + \log._{\epsilon} r) = \frac{100}{4}(1 + 1{\cdot}386)$$

$$p_m = 25 \times 2{\cdot}386 = 59{\cdot}65 \text{ lbs.,}$$

As against 59·7 lbs. found at p. 150, and 59·9 at p. 151.

3rd. Let us see what we might have expected the mean forward pressure to be in the case of the non-condensing pumping engine, whose indicator diagram is shown at p. 229, and calculated horse-power at pp. 261, 262, supposing the boiler pressure to be known, as well as the back pressure, and neglecting clearance. The pressure at the boiler is marked 70 lbs.—*i.e.*, above the atmosphere, or adding the pressure of the atmosphere 15 lbs. we have P = 70 + 15 = 85 lbs. The cut-off is at nearly $\frac{1}{3}$ stroke, or $r = 3$, and the back pressure is just 15 lbs., as the exhaust line coincides exactly with the atmospheric line. It is not usual, however, for the exhaust to be so free as this in such engines.

The mean net or effective pressure is—

$$p = \frac{P}{r}(1 + \log_e r) - p_b = \frac{85}{3}(1 + 1{\cdot}0986) - 15$$

$$= 28{\cdot}333 \times 2{\cdot}0986 - 15 = 59{\cdot}45 - 15 = 44{\cdot}45 \text{ lbs.}$$

As against 43·5 lbs. marked on the indicator diagram in Lecture XVI.

We must now take the effect of clearance into account, in order to get a more perfect estimate of the probable mean pressure in any case we may have to deal with in practice.

If the student refers back to Lecture XV., he will see that the ratio of expansion, r, as treated above, becomes r_1 when we take clearance into account, and that

$$r_1 = \frac{r(1 + c)}{1 + c\,r}$$

Where, c, the clearance, is considered as the fraction of the whole volume of the cylinder to the point of cut-off. It will, however, be more convenient here to consider, c, as an addition to the length of the cylinder, the area of this supposed clearance-length, c, being equal to that of the cylinder, = A, so that $c \times A$ = volume of clearance,* and therefore the true ratio of expansion becomes

$$\frac{L + c}{l + c} = \frac{\text{length of stroke + clearance.}}{\text{length to cut-off + clearance.}}$$

The clearance is shown in the last figure by the distance, c.

* It is not possible to estimate exactly the volume of the clearance in a completed or working engine, unless the valve casing cover be taken off, the piston brought first to one end of the cylinder, and the volume of water required to just fill the clearance spaces at the end between the piston and right up to the valve face be measured, and then the same operation performed for the other end of cylinder. Of course, it may be calculated approximately from the drawings of the engine, or allowed for in calculations previous to making the drawings. This volume of the combined clearance spaces, at one end or the other, is then considered as a fraction or percentage of the whole volume of the piston's stroke, or it may be regarded as equivalent to a fraction, c, of the stroke, L. For if, A, be the sectional area of the cylinder in square feet, then $A \times L$ = volume of the cylinder's stroke in cubic feet, and $A \times c$ = volume of clearance spaces also in cubic feet.

Hence $A(L + c)$ = whole volume of cylinder, including clearance,
and $A(l + c)$ = whole volume to point of cut-off, including clearance

Therefore, the actual ratio of expansion,

$$= \frac{A(L + c)}{A(l + c)} = \frac{L + c}{l + c} \text{ the expression used above.}$$

Now, reasoning as before—
The *whole* work done to the point of cut-off = A P l.
The *whole* work done during expansion

$$= \mathrm{A\,P}\left\{(l + c)\left(\log_e \frac{\mathrm{L} + c}{l + c}\right)\right\}$$

The sum of these two quantities equals the whole work done during one whole stroke, and is

$$= \mathrm{A\,P}\left\{l + (l + c)\left(\log_e \frac{\mathrm{L} + c}{l + c}\right)\right\} \text{ neglecting back pressure.}$$

The mean forward pressure during the stroke is found, by dividing this expression by the area of cylinder, A, and by the length of the stroke, L, and subtracting the mean back pressure, p_b.
Or

$$p_m - p_b = p = \frac{\mathrm{P}}{\mathrm{L}}\left\{l + (l + c)\left(\log_e \frac{\mathrm{L} + c}{l + c}\right)\right\} - p_b$$

Applying this formula to the last example (see also pp. 229 and 262), where P = 85 lbs., being 70 lbs. boiler pressure plus 15 lbs. atmospheric pressure, L = 2 ft., $l = \frac{2}{3}$ ft. (as steam was cut off at $\frac{1}{3}$ stroke), and assuming, c, to be equivalent to $\frac{1}{10}$ of the stroke, or ·2 ft., which is a common allowance, while the back pressure, p_b = 15 lbs. (for as we noticed before the exhaust line and the atmospheric line agree), we have by substituting these known values in the last equation—

$$p = \frac{85}{2}\left\{\tfrac{2}{3}' + (\tfrac{2}{3}' + \cdot 2')\left(\log_e \frac{2' + \cdot 2'}{\frac{2}{3} + \cdot 2}\right)\right\} - 15$$

$$p = 42{\cdot}5\ \{\cdot 667 + \cdot 867\ (\log_e 2{\cdot}54)\} - 15.$$

NOTE.—The nearest log. to 2·54 in the following table is that of 2·5.

$$p = 42{\cdot}5\ (\cdot 667 + \cdot 867 \times \cdot 91629) - 15 = 42{\cdot}5 \times 1{\cdot}46 - 15,$$

$$p = 62{\cdot}05 - 15 = 47{\cdot}05 \text{ lbs., as against } 44{\cdot}45 \text{ lbs.}$$

by our former formula when not taking clearance into account, and as against 43·5 lbs. on the indicator card. But, as we mentioned before, wire drawing, &c., reduces the pressure between

the boiler and the cylinder, and on looking at the indicator card at p. 229 we observe that the initial pressure on it is marked 65 lbs., or a fall of 5 lbs., or 13·4 per cent., between the boiler and the piston. If we take 65 as the initial pressure, then the total pressure, P, becomes 65 + 15 or 80 lbs., and substituting this value in the last formula for the 85 lbs., we get a mean cylinder pressure of 43·4 lbs., which is certainly a very close approximation to the mean cylinder pressure 43·5 lbs., as found from the actual indicator diagram by measurement. It must be admitted, however, that this indicator diagram is an exceptionally good one, and corresponds more closely in form than most engine diagrams do, to a theoretically perfect diagram.

It is therefore advisable to be cautious in trusting to this formula. It will well repay time spent to draw out to a large scale the most probable indicator diagram for any engine that we may be designing,* bringing to bear any known results for the reduction of boiler pressure due to wire drawing under similar conditions, as well as for the effects of clearance, release, and compression on the area and on the form of the diagram, so as to ascertain the mean pressure, and thereby the horse-power graphically, as well as by the formula; for actual final results as found by indicator diagrams have been known to vary 25 per cent. from the previous calculated results, when trusting merely to the formula and to the supposed boiler pressure. Of course such a result might be fairly termed a miscalculation!

The following Napierian logarithms will facilitate the calculation of mean pressures:—

HYPERBOLIC OR NAPIERIAN LOGARITHMS OF RATIOS OF EXPANSION.

No.	Logarithm.	No.	Logarithm.	No.	Logarithm.	No	Logarithm.
1	0	3·5	1·2527629	6	1·7917595	8·5	2·1400661
1·25	·2231435	3·75	1·3217559	6·25	1·8325814	8·75	2·1690536
1·5	·4054652	4	1·3862943	6·5	1·8718021	9	2·1972245
1·75	·5596157	4·25	1·4469189	6·75	1·9095425	9·25	2·2246236
2	·6931472	4·5	1·5040773	7	1·9459100	9·5	2·2512918
2·25	·8109303	4·75	1·5581446	7·25	1·9810014	9·75	2·2772673
2·5	·9162907	5	1·6094379	7·5	2·0149030	10	2·3025851
2·75	1·0116009	5·25	1·6582280	7·75	2·0476928	12	2·4849065
3	1·0986124	5·5	1·7047481	8	2·0794414	15	2·7080502
3·25	1·1786549	5·75	1·7491998	8·25	2·1102128	18	2·8903847

* The plan of plotting diagrams to one scale as explained at the end of Lecture XVI., should be followed in the case of compound engines.

Brake Horse-power.*—It is often advisable, more especially in the case of competitive trials of Land and Electric Light Engines, to know the actual power given out by an engine independent of the power absorbed in friction, &c., in driving the engine itself. In order to ascertain this, it is necessary either to apply an absorption or a transmission dynamometer to the fly-wheel, or to a pulley keyed on the crank or first shaft. The power so obtained, is termed the Brake Horse-Power and symbolised by the letters B.H.P.

It is certainly much more satisfactory to the buyer of an engine to know definitely the B.H.P. of an engine, than either the almost obsolete N.H.P., or the now more common I.H.P., for thereby he knows exactly what power he can get from the engine at a certain speed; and it would be well, both for buyers and sellers, if this system of reckoning the power of smaller engines was always insisted upon, and a test made before acceptance.

One of the simplest and most easily applied Absorption Dynamometers is that known as the Prony Brake, which we now illustrate and explain by an actual example of a test made by the author.

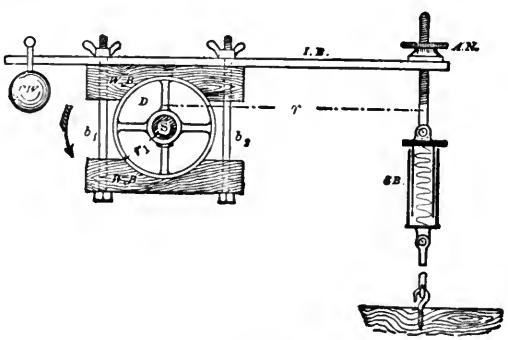

PRONY BRAKE OR ABSORPTION DYNAMOMETER.

Where W B represents Wooden blocks to fit.

D	,,	Drum or pulley keyed to
S	,,	Driving shaft.
b_1, b_2	,,	Iron bolts with ram's horn nuts to adjust the tightness of W B on D.
I B	,,	Stiff iron bar with
S B	,,	Salter's balance at one end, and
C W	,,	Small counter weight to balance extra length of I B and S B on other side.
A N	,,	Adjusting nut for Salter's balance.

* The Student should also refer to the Author's *Text-Book of Applied Mechanics and Mechanical Engineering*, vol. i., for a more complete treatment of this subject.

Method of taking Test for Brake Horse-Power.

1. Adjust position of C W until it balances the weight of I B, A N, and S B, with the wooden blocks slack on pulley.
2. Start machinery and tighten blocks, W B, by ram nuts until desired speed is attained, at same time adjusting S B by nut, A N, until a balance is obtained, keeping I B level.

Note number of revolutions per minute by speed indicator and stress indicated by spring balance.

$$\text{H.P.} = \frac{2\pi r n \text{P}}{33000} \text{ horse-power developed on brake.}$$

Where r = horizontal distance from centre of balance to centre of shaft S in feet.
n = number of revolutions per minute.
P = Salter's balance reading.

$$\text{Since } \frac{2\pi}{33000} = \cdot 0001904 = \text{a constant.}$$

$$\text{H.P.} = \cdot 0001904 \times r \times n \times \text{P.}$$

Ex.—Test recently taken by the author of fast-speed Westinghouse engine (diameter of cylinder 7-inch, stroke 5-inch, pressure of steam 55 lbs.), with crank shaft coupled direct to an Edison dynamo.

The blocks, W B, were fixed to a fly-wheel of 2 feet diameter, which was 6 inches broad.

$$r = 2{\cdot}5 \text{ feet}; \; n = 624; \; \text{P} = 48 \text{ lbs.}$$

$$\therefore \text{H.P.} = \cdot 0001904 \times r \times n \times \text{P}$$

$$\therefore \text{H.P.} = \cdot 0001904 \times 2{\cdot}5 \times 624 \times 48$$

$$\therefore \text{H.P.} = 14{\cdot}26.$$

It is important to note that neither the diameter of the pulley nor the pressure of the friction blocks on the same (due to the weight of the apparatus, or the tightening of the ram nuts), nor the coefficient of friction enter into the formula for obtaining the horse-power. The only data required being the horizontal length of lever, r, the pull, P, and the number of revolutions.

For, let, p, be the pressure, and, f, the coefficient of friction between the face of the drum, D, and two brake blocks, W B, then the twisting moment, T, tending to turn the brake blocks round with the shaft is

$$\text{T} = 2pf \times r_1$$

Where r_1 is the radius of the pulley or drum, D, in feet.

But this twisting moment is balanced by the pull on the spring balance, P, multiplied by its leverage, r.

$$\therefore 2pfr_1 = Pr.$$

The angle turned by the pulley or drum, D, per minute $= 2\pi n$ radians, and since the work done by a couple is the product of its moment into the angle through which the body acted on turns :—

The work absorbed by friction = The work done per minute in foot-pounds, *i.e.*,

$$2pfr_1 \times 2\pi n = Pr \times 2\pi n$$

$$\text{and } \therefore \text{ the H.P.} = \frac{Pr \times 2\pi n}{33000} = \frac{2\pi r n P}{33000}$$

It is sometimes advisable to add a dash pot to the lever, I B, in order to get steady readings of the Salter's balance or weight, P.

Another very useful and practical form of Prony Brake is that shown in the following figure :—

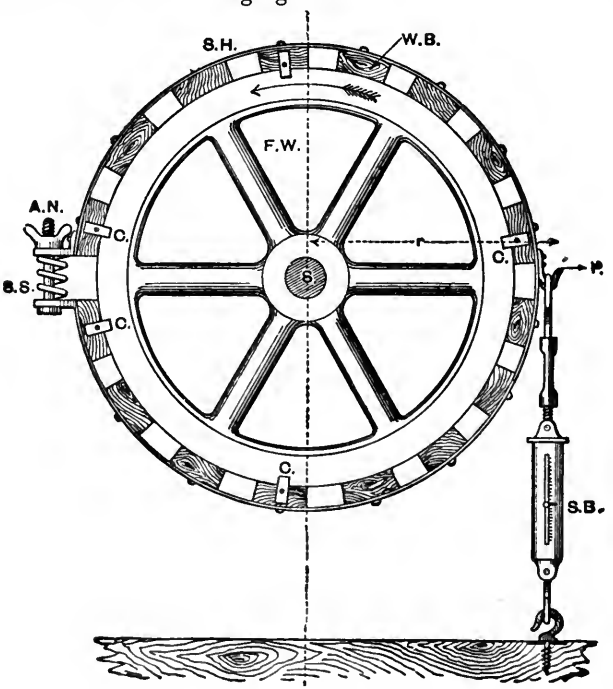

Here the balance weight and ram nuts are done away with, in favour of a steel hoop or strap, S H, to which are fitted wooden blocks, W B, with spaces of, say, 2 inches or so intervening between them, surrounding the flywheel, F W, keyed on the crank shaft, S. Clips, C, made of iron or steel, keep this brake strap fair on the flywheel, and thus prevent it from sliding to one side more than another.

The engine is started with the adjusting nut, A N, and the spiral spring, S S, slack until it reaches the normal speed. The nut, A N, is now gradually tightened, the speed being kept constant and the pointer, P, level; the tension on the Salter's balance, S B, is read off and the calculation made for the B.H.P. exactly as in the former example.

Society of Arts Rope Dynamometer.—The jurors for the famous gas engine trials, held under the auspices of the

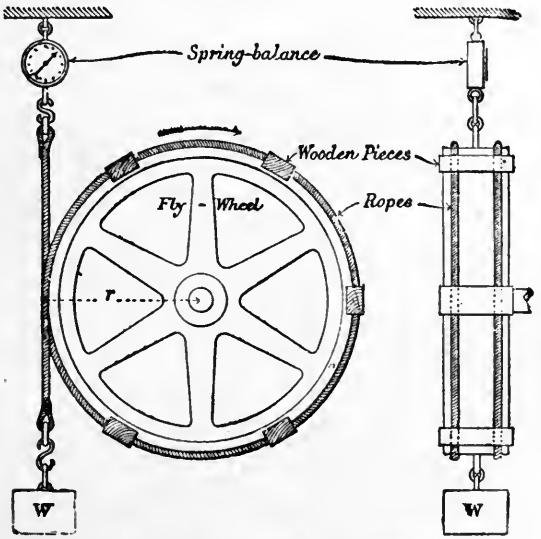

SOCIETY OF ARTS ROPE DYNAMOMETER.

London "Society of Arts" in 1888, were the first to publicly use a rope-brake in any extensive series of competitive trials, and hence the general name which has been given to this very simple and excellent form of brake. But, rope-brakes had been designed and used prior to these tests by at least four well-known persons. As will be gathered from the

following three sets of figures, this brake consists of an endless flexible rope, doubled round a pulley or the flywheel of an engine, and fitted with several ⌐¬ shaped wooden distance pieces, in order to keep the two parts of the rope uniformly apart and also to prevent them slipping off the wheel. These distance pieces or clips should be secured to the rope by soft copper wire lacing, drawn in from the outside of the clips and then through the centre of the rope, instead of being fastened thereto by nails or screws from the inside; for such latter metal fastenings are liable to part, to heat, and, consequently, char the rope. The rope should be thoroughly stretched and treated with castor oil or grease and black lead powder, prior to its being fitted to the wheel and to the clips, whenever long and important tests are desired. No further lubrication is required, and consequently the first and second defects mentioned on a previous page as pertaining to strap-brakes are entirely avoided. If large powers are to be demanded from a wheel of limited size, then it should have its rim of ⌊⌋ section, so that a small stream of water may be played into the inside of the hollow part of the rim, which water will help very materially by its evaporation to dissipate the heat generated by the friction between the brake rope and the outer surface of the wheel. The surface of the pulley should be flat instead of rounded, in order to get the rope to work perfectly smooth, and a trial run of a few hours prior to the special test is advisable, in order to bring about a small flat glazed surface on the rope, which glazing is materially assisted by the previous application of the black lead powder. For anything up to 5 B.H.P. at 1,000 or more feet per minute of friction surface speed, the author has found that a flexible ship's log-line about ·3 inch in diameter with a double turn round the wheel forms an excellent brake rope. From 5 to 10 B.H.P. a ·5-inch diameter manilla rope serves the purpose. From 10 to 30 B.H.P. a ·6-inch rope will do, and for 100 to 150 B.H.P. (at about 4,000 feet per minute) four turns of 1-inch rope on a large 16 feet diameter flywheel runs quite cool, as may be seen from the next figures on absorption dynamometers in this Lecture.

Advantages of the Rope-Brake.—The author has tested a large number and variety of motors with the rope-brake, and he considers that it has the following advantages :—

1. It can be constructed on short notice, from materials always at hand, in a factory or workshop, and at little expense.
2. It is so self-adjusting that very accurate fitting is not required.
3. It can be put on and taken off the brake-wheel in a very short time.
4. Being comparatively light and of small bulk, it can be hung up on the wall of the testing room, or laid past in a cupboard for future use.

5. It requires no attention whatever for lubrication, if the previously mentioned precautions as to treating and fitting the same are attended to.

6. The back pull registered by the spring-balance may be rendered very steady and of small amount by properly adjusting the weight, W, prior to the commencement of the recorded brake trials.

7. The brake-wheel, if of the proper size, soon attains a maximum temperature, so that the radiated heat equals that generated by the friction.

8. It may be used for very small as well as for large powers.

9. For large powers more and stronger ropes are only required on a comparatively larger wheel, and with the water-cooling device mentioned in the previous section. The greatest power which the author has tested with a rope-brake was an engine of 140 I.H.P. for five continuous hours.

Tests of Small Engines with the Rope-Brake.—Fig. 1 shows the arrangement of dead weight and Salter's balance used by the author in testing gas engines, and Fig. 2 the way in which he applied two spring balances to the brake rope in case of high speed steam engines. The latter plan has, under certain circumstances, particular advantages over the former. By selecting two spring balances with different periods of oscillation, the tendency to jerk or "hunt" may be considerably reduced, or even entirely checked.

RESULTS OF TWO TESTS WITH THE ROPE-BRAKE.

DATA.	"Acme Gas Engine" by Alex. Burt & Co., Glasgow.	"Brown's Rotary Engine" by Lang & Sons, Johnstone.
Duration of tests in hours,	4	5
Initial gas or steam pressure in lbs. per sq. in. above atmosphere,	150	95
Final gas or steam pressure in lbs. per sq. in. above atmosphere,	1	1·5
Radius of brake load in feet,	2·771	2·042
Mean revolutions per minute,	154	574·5
Mean nett brake load in lbs.,	231	93·2
Mean B.H.P.,	18·77	20·8
Gas in cb. ft. or steam in lbs. per B.H.P.-hour,	19·13 cb. ft.	37·9 lbs.

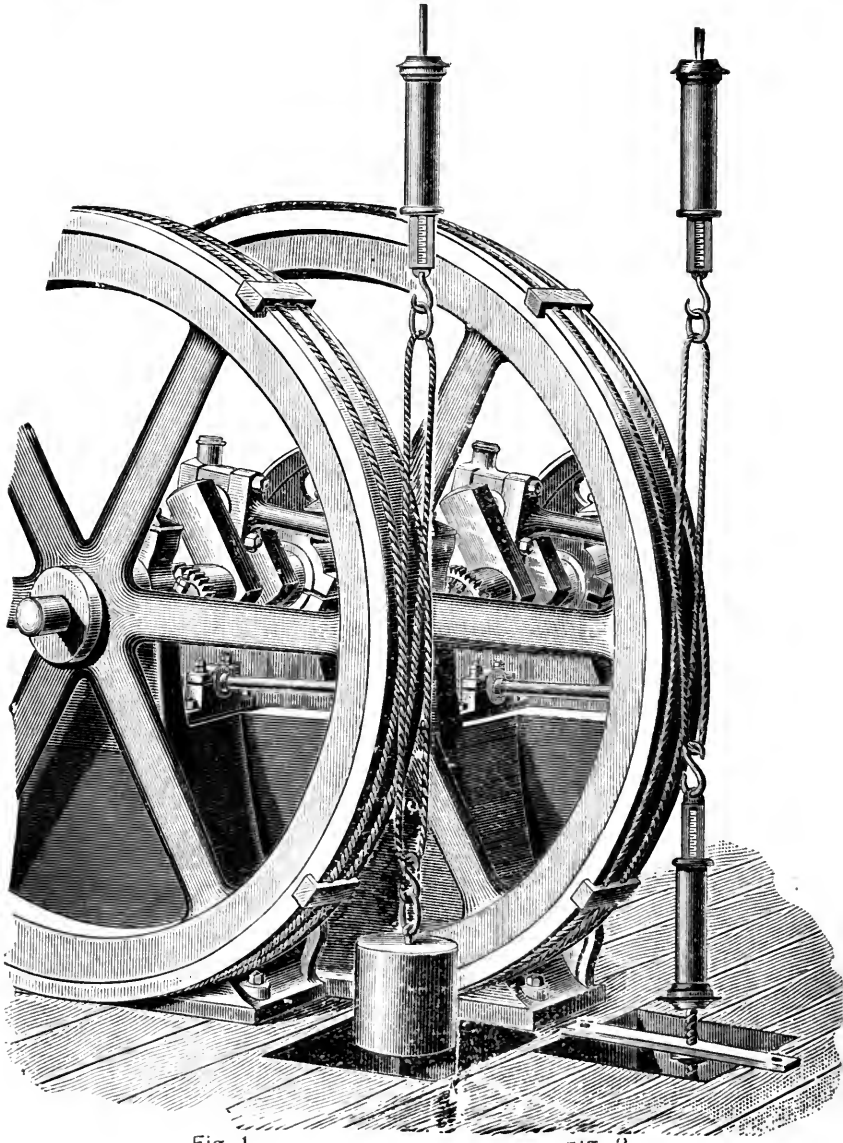

Fig. 1. Fig. 2.

THE TWO FORMS OF BRAKE

USED BY PROF. JAMIESON IN TESTING THE "AJAX" GLASGOW GAS ENGINE FOR BRAKE HORSE-POWER

MEAN RESULTS OF A THREE HOURS' AND A SIX HOURS' CONTINUOUS B.H.P. TESTS AT FULL NORMAL WORKING POWER; ALSO, HALF-AN-HOUR AT FULL POWER OF THE "AJAX" GLASGOW GAS ENGINE.

	March 9, 1889. Mean of Three Hours' Tests, 9.30—12.30.	March 29, 1889, Mean of Six Hours Tests, 12 to 6 p.m.						Mean of Previous Six Hours' Tests, 12—6.	March 29, 1889, Full Power Tests, 6—6.30 p.m.
		First Hour, 12—1.	Second Hour, 1—2.	Third Hour, 2—3.	Fourth Hour, 3—4.	Fifth Hour, 4—5.	Sixth Hour, 5—6.		
Revolutions per Minute, .	173·5	180·5	180·3	175·3	176·1	175·2	177·3	177·5	200·2
Net Brake Load, in lbs., .	99	98	98	98	98	98	98	98	93
Gas Consumption (*Main only*) in Cubic Feet, per Hour, ...	189·6	184	186	181	181	183	185	183	218
Brake-Horse-Power, . .	8·84	9·1	9·1	8·85	8·9	8·84	8·95	8·96	10·1
Gas, per Brake-Horse-Power, in Cubic Feet, per Hour, ...	21·5	20·2	20·4	20·4	20·3	20·7	20·6	20·4	21·6
Mean Effective Pressure, in lbs., per Square Inch,	60·8	...	...	...	...	...	...	63	...
Indicated Horse Power from above data, . .	10·04	...	...	...	...	...	...	10·6	...
Gas, per I.H.P., in Cubic Feet, per Hour (*Main only*).	18·9	...	...	...	...	...	...	17·2	...
Mechanical Efficiency of Engine, or $\frac{\text{B.H.P.}}{\text{I.H.P.}} \times 100$,	87·9%	...	...	...	...	...	...	84·2	...

LECTURE XVII.—QUESTIONS.

1. Define the horse-power of an engine. Explain the method adopted for measuring the work actually done in the steam cylinder of an engine. Write down the formula by which the horse-power of an engine is obtained.

2. Having given the indicator diagrams of a steam engine, explain in detail how you would determine the indicated horse-power, and state what additional data are required.

3. What diameter of cylinder will develop 50 horse-power with a 4-foot stroke, 40 revolutions per minute, and a mean effective steam pressure of 30 lbs. above the atmosphere, the engine being non-condensing? *Ans.* 14·78.

4. The diameter of cylinder of non-condensing engine is 18 ins., length of stroke 2 ft. 6 ins., mean pressure of steam 20 lbs. on sq. in. above the atmosphere. Find the number of revolutions per minute when the engine develops 27 H.P. *Ans.* = 35 revs. per min.

5. Having obtained indicator diagrams from a single cylinder engine, state particularly, and with the necessary details and sketches, the method of obtaining the indicated horse-power. A motion of 1 inch in the pencil of the indicator, as due to steam pressure = 20 lbs. on the sq. inch, what is the H.P. at 90 revolutions per minute, if diameter of the piston be 10 inches, stroke 20 inches, area of diagram 8 sq. inches and length 5 inches? *Ans.* 22·8.

6. The two cylinders of a locomotive engine are each 17 inches in diameter, and the length of stroke is 24 inches, also the driving wheel makes 100 revolutions per minute, and the mean effective pressure of the steam is 80 lbs. Find the horse-power. *Ans.* 440·3.

7. The diameter of the cylinder of an engine being 53 inches, the stroke 5 feet, and the number of revolutions 30 per minute, find the mean pressure of the steam to develop 600 indicated horse-power. *Ans.* 29·9.

8. In a compound cylinder marine engine, the diameter of the high-pressure cylinder is 57 inches, and that of the low-pressure cylinder is 100 inches, the stroke of each piston being $2\frac{3}{4}$ feet. The mean pressures of the steam in the respective cylinders are 26 lbs. and $8\frac{1}{2}$ lbs., and I.H.P. is 1,028; find the number of revolutions made in one minute. With what view is an engine constructed in the manner pointed out? *Ans.* 46·3.

9. In a compound cylinder tandem engine the steam is cut off at $\frac{1}{3}$ of the stroke in the high-pressure cylinder, the areas of the pistons are as 1 to 3, and the diameter of the smaller cylinder is 20 inches; investigate an expression for the work done in one stroke. Example: Find the horse-power of the engine when the initial pressure of the steam is 85 lbs. per square inch above that of the atmosphere—viz., 15 lbs., the back pressure in the large cylinder is 3 lbs. per square inch, and the speed of each piston is 300 feet per minute. *Ans.* 278 taken isothermally.

10. An engine gives 10 indicated horse-power and 7·6 brake horse-power for a consumption of 230 cubic feet of gas per hour. Explain how these measurements are made. If the calorific power of 1 cubic foot of the gas is 530,000 foot-pounds, what is the efficiency? What is your notion of how all the energy of 1 cubic foot of gas is disposed of?

11. Initial pressure of steam 180 lbs. per square inch, back pressure 17 lbs. per square inch, cut off at one-third of the stroke, area of piston 112 square inches, and length of crank 1 foot; what work is done in one stroke? What is the weight of steam used in one stroke if the volume of 1 lb. of the steam is 2·51 cubic feet? If there are 200 strokes per minute, what is the indicated horse-power and what weight of steam is used per hour, neglecting clearance, condensation, and leakage? *Ans.* 24,390 ft.-lbs.; ·203 lb.; 147·8 H.P.; 2,436 lbs. per hour.

12. Steam of 150 lbs. per square inch (absolute) is cut off at one-third the stroke, and expands according to the law pv constant. Find the average pressure in the forward stroke, using squared paper. The back pressure is 18 lbs. per square inch, what is the effective pressure on the piston? The piston is 15 inches diameter, crank 1 foot, two strokes in the revolution, 120 revolutions per minute; find the work done in one revolution and also the horse-power. One lb. of steam of 150 lbs. pressure has a volume of 2·978 cubic feet, what weight of steam is indicated per hour?

13. Steam is cut off at one-third the stroke and expands by the law pv constant; find the average pressure in the forward stroke as a fraction of p_1, the initial pressure. The back pressure is 18 lbs. per square inch, together with 10 lbs. per square inch representing the friction of the engine. The piston is 15 inches diameter, crank 1 foot, two strokes per revolution, 120 revolutions per minute; find the actual horse-power for each of the three values of p_1 given in the table below. One lb. of steam pressure, p_1, has the volume, v_1 cubic feet, given in the table; what weight of steam, W, is indicated per hour in each case? Show, on squared paper, the probable relationship of W and the horse-power in this engine when p_1 varies but the cut-off of one-third is not altered.

p_1	150	120	80
v_1	2·987	3·671	5·37

14. The expected mean steam pressure for an engine, which has to be designed, is 41 lbs. per square inch, and the piston speed adopted is 600 feet a minute: what diameter of cylinder must be adopted to secure an effective H.P. of 78? Assume the effective power is 89 per cent. of that developed in the cylinder. *Ans.* 12¼ inches diameter.

15. A steam engine has a cylinder 13 inches in diameter, and a piston speed of 650 feet a minute, calculate its probable indicated H.P. from the following data as to the steam:—Boiler pressure 125 lbs. absolute, cut off at 18 per cent. of piston stroke, and back pressure 16 lbs. absolute. You may neglect compression and release effects, and assume that the clearance volume at each end is 2½ per cent. of the volume swept by the piston. Given $\log_e 5 = 1{\cdot}609$. *Ans.* 124·3 H.P.

16.* The area of the piston of an engine is 3 square feet, the pressure of the steam is 15 lbs. per square inch above the atmosphere on admission, and the steam is cut off at ⅓ of the stroke; the crank shaft makes 40 revolutions per minute, and the length of the stroke is 3 feet, find the H.P. (given hyp. log. 3 = 1·0986124). *Ans.* Exhausting at zero pressure = 65·9.

17.* The cylinder of an engine is 3 feet 6 inches in diameter, the stroke is 5 feet, and the steam is cut off at ⅓ of the stroke. If steam be admitted into the cylinder at 45 lbs. pressure, find the work done in one stroke (log. 3 = 1·0986124). *Ans.* 218,061 ft.-lbs.

18. Steam enters a cylinder at 80 lbs. absolute, and is cut off at ¼ of the stroke. The diameter of the piston is 40 inches, and the length of stroke 5 feet, the number of revolutions being 50 per minute. Back pressure 3 lbs. absolute, find the horse-power of the engine. *Ans.* 1,009.

---

* See page 280 for solutions.

19. The stroke of a piston is 5 feet, and its diameter is 4 feet, steam is admitted at 20 lbs. absolute (no back pressure), and is cut off at $\frac{1}{2}$ stroke, find work done in one stroke. If steam be cut off at $\frac{1}{3}$ stroke, and the final pressure is required to remain unchanged, what should be the diameter of the cylinder in order that the work done may also remain unchanged? (log 2 = ·6931472, log 3 = 1·0986124). *Ans.* 153,192 ft.-lbs.; 43·1 ins.

20. Explain by a sketch and index, a rope-brake dynamometer. State how it is used and enumerate its advantages.

Having frequently found that students experience a difficulty in working out such questions as Nos. 16 and 17, I have thought it advisable to give their solution in full so that they may the more readily understand how to do similar questions.

Question 16 of Lecture XVII.

Given, A = Area of piston = 3 sq. ft. = 3 × 144 = 432 sq. ins.

P = abs. press. per sq. in. = 15 + 15 = 30 lbs.

l = point of cut-off = $\frac{\text{stroke of engine}}{\text{ratio of expansion}} = \frac{L}{r} = \frac{3 \text{ ft.}}{3} = 1$ ft.

N = No. strokes per minute = (revolutions) × 2 = 40 × 2 = 80.

$\log_e r = 1{\cdot}0986124$.

By formula, $\text{H.P.} = \dfrac{A\,L\,N\left\{\frac{P}{r}(1 + \log_e r) - p_b\right\}}{33000}$

Substituting numerical values—

$$\text{H.P.} = \frac{432 \times 3' \times 80\left\{\frac{30 \text{ lbs.}}{3}(1 + 1{\cdot}0986) - 0\right\}}{33000}$$

$$\therefore \text{H.P.} = \frac{432 \times 3 \times 80 \times 10 \times 2{\cdot}0986}{33000} = 65{\cdot}9.$$

N.B.—No value being given, p_b, it is assumed as = 0 lbs.

Question 17, Lecture XVII.

Given, d = diameter of cylinder = $3\frac{1}{2}$ ft. = 42 ins.

$$\therefore A = \pi r^2 = \frac{22}{7} \times 21 \times 21 = 1386 \text{ sq. ins.}$$

P = 45 lbs. (assumed as the total pressure).

L = length of stroke = 5 ft.

r = ratio of expansion = 3.

Required—The work done in one stroke.

By formula—

$$\text{Mean presssure} = \frac{P}{r}(1 + \log_e r) - p_b \text{ in lbs. per sq. inch.}$$

No value being given for p_b, it is assumed as = 0.

Work done = space passed through × force applied.

$$\text{,,} \quad = L \times \frac{P}{r}(1 + \log_e r) \times A.$$

Substituting numerical values—

$$\text{Work done} = 5 \times \frac{45}{3} \times (1 + 1{\cdot}0986) \times 1{,}386$$

$$\text{,,} \quad = 5 \times 15 \times 2{\cdot}0986 \times 1{,}386$$

$$\text{,,} \quad = \mathbf{218{,}150} \text{ foot-lbs. nearly.}$$

21. Describe a method of obtaining the brake horse-power of an engine, and state the advantages to buyer and seller of adopting this method over that of nominal or indicated horse-power. An engine is making 150 revolutions per minute, the diameter of the brake pulley being 4 feet, and the pull on the brake 50 lbs., what is the B.H.P.? *Ans.* 2·85.

22. The diameter of a steam cylinder is 8 inches, the stroke of the piston is 18 inches, the number of revolutions per minute is 150, and the mean effective pressure of the steam is 35 lbs., find the I.H.P., taking $\pi = 3\frac{1}{7}$. The same engine is tested by a brake-pulley on the crank-shaft 5 feet in diameter, the effective load on the brake being 294 lbs., with a radius of $2\frac{1}{2}$ feet. Find the brake horse-power, and the working efficiency of the engine. *Ans.* 24; 21; 87·5 per cent.

23. How would you set about testing an engine? [Choose either a gas or an oil engine, or a steam engine governed by throttling.] Measuring the steam or gas or oil used and the indicated and brake horse-power, what sort of results would you expect to obtain for three tests under steady load of one of these engines? It will be well to give a rough notion of the values actually obtained in any set of tests which you have seen, or of which you have read.

24. Steam at 120 lbs. per square inch (absolute), cut-off at one-fourth of the stroke; expansion curve, $p\,v$ constant; back pressure 3 lbs. per square inch. Find the average pressure during the stroke, by calculating the pressures at a number of places. No cushioning, no clearance, release exactly at end of stroke. If the piston is 18 inches diameter, the crank 1 foot, speed 100 revolutions per minute, and the engine double-acting, what is the horse-power? What volume of steam is admitted at each stroke? Also, how much per hour? If this steam measures 3·671 cubic feet to the lb., what is the weight of steam required per hour? If the steam condensed on admission is 40 per cent. of all that is supplied, what is the weight of steam required per hour?

25. With steam at 120 lbs. per square inch (absolute), cut-off at one-fourth of the stroke; expansion curve, $p\,v$ constant. Back pressure 3 lbs. per square inch. No cushioning, no clearance, release exactly at the end of the stroke. The piston is 18 inches diameter, crank 1 foot, speed 100 revolutions per minute, and engine double-acting. If the Napierian logarithm of 4 is 1·3863, what is the hypothetical horse-power? What volume of steam is admitted at each stroke? Also, how much per hour? This steam measures 3·671 cubic feet to the lb. What is the weight of steam per hour? If the steam condensed on admission is 40 per cent. of all that is supplied, what is the weight of steam per hour? Repeat this calculation for steam whose initial pressure is 40 lbs. per square inch, the volume of 1 lb. being 10·4 cubic feet. Plot water per hour, and indicated horse-power, and assume that a straight line connects your points. From this, what is the water per hour when there is no indicated horse-power?

26. Sketch and describe any good form of steam engine indicator, and explain what data you require in order to calculate the H.P. of an engine, besides the indicator card.

27. Take a hypothetical indicator diagram—no clearance, constant back pressure 17 lbs. per square inch. Let friction of engine be represented by 10 lbs. per square inch on the piston. Expansion law $p\,v$ constant. Cut-off at one-third of the stroke. Area of piston 100 square inches, crank 1 foot, 200 working strokes per minute. Steam of the following initial pressures being admitted, find in each case the crank-shaft horse-power, and the

weight of indicated steam per hour. Tabulate the results, and plot upon squared paper. The following information is given:—

Absolute pressure of admitted steam, lbs. per sq. in.,	50	100	150
Cubic feet of 1 lb. of admitted steam, . . .	8·24	4·356	2·978

28. A steam electric generator on three long trials, each with a different point of cut-off on steady load, is found to use the following amounts of steam per hour for the following amounts of power:—

Lbs. of steam per hour, . . .	4,020	6,650	10,800
Indicated horse-power, . . .	210	480	706
Kilowatts produced, . . .	114	290	435

Find the indicated horse-power and the weight of steam used per hour when 330 kilowatts are being produced. Find in the four cases the amounts of steam used per Board of Trade unit (that is, per kilowatt hour). In what way does regulation by varying cut-off differ as to economy of steam under varying load factors, from regulation by varying the pressure letting the cut-off remain constant?

29. A test of a small steam motor and its boiler (in which the fuel used was petroleum) gave the following results:—(1) Weight of petroleum used per hour in boiler, 5·53 lbs.; (2) brake H.P. of motor, 3·75; (3) heating value of the petroleum per lb., 20,400 British thermal units; what is the thermal efficiency of the whole plant?

30. The two cylinders of a locomotive are together found to give an indicated H.P. of 432, and to require 7,560 lbs. of steam per hour. The feed temperature is 60° F. and the boiler temperature 361° F. Assuming that the efficiency of the boiler is 71 per cent., how many pounds of coal per hour are being burnt in the furnace? (The total heat in a pound of steam above 32° F. = 1,082 + 0·3 t thermal units, where $t°$ is the temperature of the steam; and the total heating value of 1 lb. of the coal used = 12,750 British thermal units.) What is the thermal efficiency of the cylinders?

31. Use the common hypothetic indicator diagram; expansion curve "pv constant"; no clearance or cushioning. A piston is 1 square foot in area, stroke 2 feet, 200 strokes per minute; find the indicated horse-power if the initial pressure of the steam is 120 lbs. per square inch. Take two cases—one in which the cut-off is at half stroke, the other in which the cut-off is at one-fifth of the stroke. This steam is initially 3·67 cubic feet per lb.; find in each case the weight of steam used per hour. It has been found by observation that in the factory driven by the engine the number of yards of stuff made per hour is 7·8 I − 320, where I is the indicated horse-power. Find the number of yards for each of your two cases. Tabulate your answers. State also the number of yards per lb. of steam in each of the cases.

LECTURE XVII.—A.M.INST.C.E. QUESTIONS.

1. Describe the apparatus you would use, and the methods you would adopt, for measuring the I.H.P., the B.H.P., and the steam consumption per hour of a single-cylinder condensing engine.

2. Sketch and describe a form of rope brake by means of which accurate results may be obtained. State the observations that have to be taken when using it, and work out a numerical example from data assumed by yourself.

3. What is meant by "mean pressure referred to the L.P. cylinder," and how is it obtained from the indicator diagrams and the necessary engine dimensions? State approximately its value at the most economical load, having regard to engine friction, the steam-pressure about 170 lbs. per square inch absolute (*a*) when the engine is working non-condensing, (*b*) when the engine is working condensing.

4. Show how you would proceed to determine the stroke and the diameter of the cylinder for a steam engine of a given power after having decided upon the speed, steam-pressure, the points of cut-off, release, and compression, also the clearance and back-pressure.

5. It is required to measure the B.H.P. by applying a friction-brake on the driving pulley of a high-speed motor, such as a steam turbine. Describe the method you would adopt, and state how you would keep the pulley moderately cool. Give an expression for the B.H.P.

6. The ordinates of an indicator diagram are :—

Front end,	1·5	1·48	1·45	1·1	0·9	0·75	0·64	0·6	0·5	0·3 ins.
Back end,	1·6	1·5	1·3	1·1	0·85	0·7	0·66	0·6	0·45	0·2 ,,

The indicator spring is compressed 1 inch by 16 lbs. Diameter of cylinder, 45 inches; stroke, 3 feet 9 inches; revolutions, 65 per minute. Calculate the I.H.P. *Ans.* 341 I.H.P.

LECTURE XVIII.

CONTENTS.—Action of the Crank—Tangential and Radial Forces—Diagrams of Twisting Moments with Uniform and with Variable Steam Pressure on Piston, neglecting as well as taking Account of the Obliquity of Connecting-rod—Effect of Inertia of Moving Parts—Case of a Horizontal Engine with Connecting-rod of Infinite Length—Example I.—Indicator Diagrams as modified by Inertia—Graphic Representation of the Inertia—Case of a Horizontal Engine with Connecting-rod of Finite Length—Example II.—Position of Instantaneous Axis of Connecting-rod—Crank Effort Diagrams of "The Thomas Russell Engine" and of a "Triple-Expansion Engine"—Crank Effort Diagrams of the Quadruple-Expansion Five-Crank Engines of S.S. "Inchdune"—Example III.—Questions.

Action of the Crank—Tangential and Radial Forces.—In most steam engines the conversion of the reciprocating motion of the piston into circular motion is effected by means of the crank and connecting-rod.

The turning or tangential force exerted by the connecting-rod on the crank varies with the position of the crank itself. Thus, when the centre line of the crank coincides with a line drawn through the centre of the cylinder and the centre of the crank shaft, the crank is said to be at the "dead points," and the connecting-rod exerts no rotational effort on it. The crank arrives in those positions twice in one revolution, just when on the point of reversing the direction of motion of the piston. These positions are O A and O B in the next diagram. Again, when the crank is at an angle of about 90° to the centre line through the cylinder and crank shaft, the tangential force is a maximum.

Diagram of Twisting Moments—Neglecting Length of Connecting-Rod.—The simplest case is that in which the pressure on the piston is uniform throughout the stroke, and the obliquity of the connecting-rod is neglected. Then the pressure or thrust, Q, on the connecting-rod is equal to the total pressure, P, on the piston (see next figure).

Suppose the crank to be in the position, $O C_1$, then by the parallelogram of forces the thrust, Q, on the connecting-rod may be resolved into two components, one, $C_1 R$, acting along the line of the crank and representing a radial pressure, R, on the crank-shaft bearing; the other, $C_1 T$, acting at right angles to $O C_1$, and representing the tangential pressure, T, acting on the crank pin. Of course, the *whole* thrust on crank-shaft bearing is equal to the *whole* pressure on piston.

Let the angle $A O C_1 = \theta$, $\therefore \angle Q C_1 O = \theta$, $\because C_1 Q$ is $\parallel$ to A O.
Then the radial pressure, R, or $C_1 R = Q . \cos \theta$.
And the tangential pressure, T, or $C_1 T = Q . \sin \theta$.

These components may be plotted out separately for every position of the crank by curves in the following manner:—Let $O C_1$ represent Q, to any convenient scale, and lay off to the same scale $O t_1 = T = C_1 T$, the tangential component of Q. Then t_1 is a point on the curve, and $O t_1$ measures to scale the tangential pressure on the crank pin for the position, $O C_1$, of the crank. To find other points on this curve, take any other position of the crank and plot off along that line of the crank the tangential component of Q for that position. If we find a number of points and join them, they

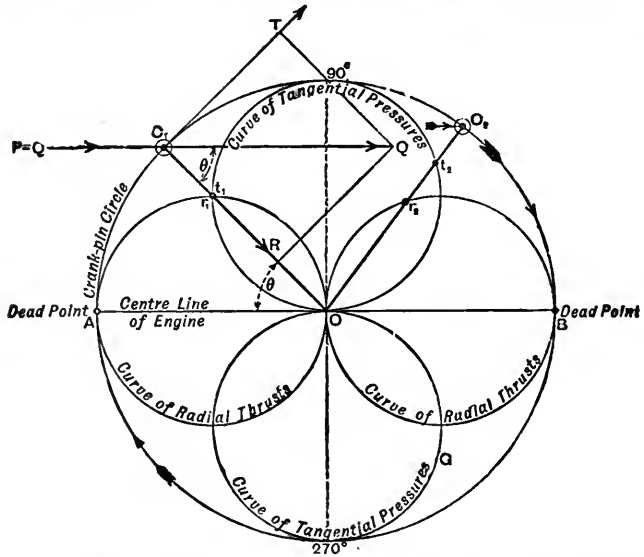

POLAR CURVES OF TANGENTIAL FORCE (T) ON CRANK-PIN, AND RADIAL THRUST (R) THROUGH CRANK, WITH UNIFORM PRESSURE ON PISTON AND NEGLECTING OBLIQUITY OF CONNECTING-ROD.

will be found to lie on the circumference of two circles described with O to 90° and O to 270° as diameters. Similarly, if we lay off $O r_1$ on the position, $O C_1$, of the crank, equal to the radial component of Q, for that position of the crank, and do the same for a number of other positions, we have, by joining the points, two complete circles described with O A and O B as diameters, representing the radial thrust on the crank-shaft bearing for any position of the crank. In the position of the crank taken ($\theta = 45°$) the radial and tangential components are equal, and, therefore, r_1 coincides with t_1. These circles are known as "*Polar*" curves. For any other position, $O C_2$, of the crank, the tangential or turning force is given by $O t_2$, whilst the radial thrust on the crank shaft is given by $O r_2$.

The TWISTING OR TURNING MOMENT OR TORQUE on the crank shaft at any position *is equal to the tangential pressure on the crank pin in that position multiplied by the length of the crank.*

Let r = radius of crank-pin circle or the length of the crank.

,, θ = the angle made by the crank with the line of dead points.

Then the twisting moment = $Q r \sin \theta$.

Or, ,, ,, = $P r \sin \theta$ (for in this case P = Q).

Since the polar curves, O to 90° and O to 270°, represent the tangential forces ($P \cdot \sin \theta$), their values must be multiplied by r, the length of the crank, in order to find the TWISTING MOMENT at any point; but, seeing that, r, is constant, the polar curves may be taken to represent the *relative* values of the twisting moments.

The twisting moments may also be represented by the following diagram, in which the horizontal line represents the path of the crank, and the height of each vertical ordinate gives the tangential force or the twisting moment for that point. To draw the diagram for one stroke of the piston, or one half revolution of the crank, lay off a horizontal line equal to the semi-circumference of the crank-pin circle, and divide it into 10 equal parts. Each division then represents a movement of 180 ÷ 10 = 18° of the crank.

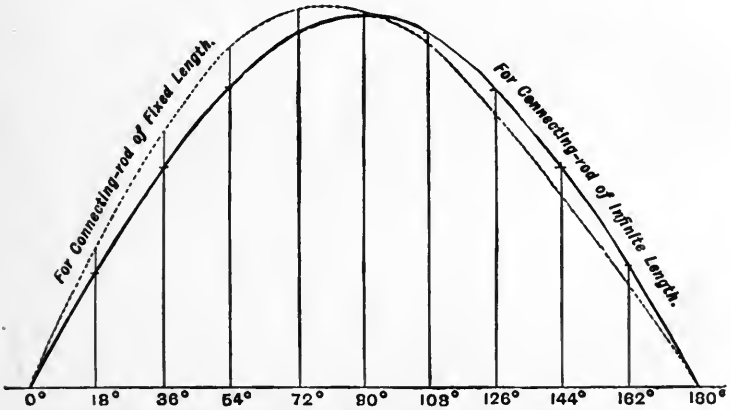

DIAGRAMS OF TWISTING MOMENTS FOR ONE HALF REVOLUTION OF CRANK.
Both Curves are Drawn on the Assumption of Uniform Pressure on Piston.

Then calculate by the above formula, or plot out by the previous diagram of polar curves, tangential pressures for each of the 10 positions of the crank, and lay them off vertically at each division. Join these points, and we have the above full line curve which represents the twisting moments for one half revolution, neglecting the obliquity of the connecting-rod, and when the pressure on the piston is uniform throughout. A curve for the radial thrust through crank could be plotted out in the same way.

In the early days of the steam engine, it was imagined that the use of the crank and connecting-rod involved a considerable loss of the work developed on the piston. The fallacy of this idea may now be made clear.

The pressure on the crank-pin in the direction of rotation is = P sin θ;

therefore, in order to obtain the mean tangential pressure during a half revolution of the crank, we have only to find the mean value of sin θ, and multiply it by, P, the total mean pressure on the piston.

For an approximate result take the value of sin θ at every 10 degrees of the crank's movement and divide the total by 18, the number of divisions taken, thus—

Sin	10°	·173
,,	20°	·342
,,	30°	·500
,,	40°	·643
,,	50°	·766
,,	60°	·866
,,	70°	·939
,,	80°	·985
,,	90°	1·000
,,	100°	·985
,,	110°	·939
,,	120°	·866
,,	130°	·766
,,	140°	·643
,,	150°	·500
,,	160°	·324
,,	170°	·173
,,	180°	000
	Total	11·428

$$\therefore P \times \frac{11{\cdot}428}{18} = P \times {\cdot}6349 = \text{(mean pressure)}.$$

Hence, if L = length of stroke = $2r$.

The work done on the crank in one revolution = Total mean pressure × distance passed through,

$= P \times {\cdot}6349 \times 2\pi r,$

$= P \times {\cdot}6349 \times 3{\cdot}1416 \times L = 1{\cdot}9946\ P\,L.$

Which is practically the same thing as 2 P L. But, the work done on the piston during one revolution is also equal to 2 P L. Consequently the employment of the crank and connecting-rod involves no loss of power if we neglect the power absorbed by friction due to bearing surfaces, &c.

NOTE.—No such combination of mechanism as the crank and connecting-rod can involve a loss of power (neglecting friction), as it would be contrary to the "principle of the conservation of energy."

Diagram of Twisting Moments—Taking Account of Length of Connecting-Rod.—The next case is that in which the obliquity of the connecting-rod is taken into account, and the pressure on the piston is supposed uniform. In this case, *the twisting moment is equal to the total pressure on the piston,*

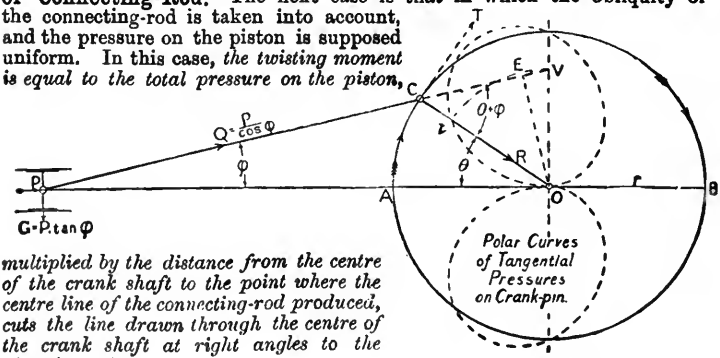

multiplied by the distance from the centre of the crank shaft to the point where the centre line of the connecting-rod produced, cuts the line drawn through the centre of the crank shaft at right angles to the piston's motion.

DIAGRAM OF TWISTING MOMENTS—TAKING ACCOUNT OF LENGTH OF CONNECTING-ROD.

NOTE TO FIGURE.—The pressure along connecting-rod and on the crosshead guides may be found graphically for any position, thus—

Let P O = P, the pressure on piston to any convenient scale.

Then P V = Q, the direction and pressure along connecting-rod to the same scale.

And O V = G, the direction and pressure on the lower crosshead guide to same scale

But $P\,V \cos\phi = P\,O$

Or $Q \cos\phi = P$

$$\therefore Q = \frac{P}{\cos\phi}$$

$$\text{And } \frac{O\,V}{O\,P} = \frac{G}{P} = \tan\phi$$

$$\therefore G = P \tan\phi$$

To prove this, let O be the centre of the crank shaft, and O P the centre line of the engine, passing through, O, and the centre of the cylinder. Let O C be the position of the crank, and P C the length of the connecting-rod. Produce P C to cut the vertical through O in the point V, and draw O E perpendicular to P V. Then $\angle$ V E O = $\angle$ P O V; also $\angle$ P V O is common:

$\therefore$ $\angle$ V O E = $\angle$ O P V = ϕ, the inclination of the connecting-rod to centre line of engine.

$$\text{Now the twisting moment} = Q \times OE = \frac{P}{\cos\phi} \times OV \cos\phi = P \times OV.$$

Knowing this, we can readily construct the polar curves. Suppose the crank in the position, O C, produce the centre line of the connecting-rod to cut the line O V in V. With centre, O, and radius, O V, describe the arc, V t, cutting O C in t. Then, t, is a point on the tangential pressures or twisting moment's curve, and the twisting moment for the position, O C, of the crank is thus P $\times$ O t. A similar construction for all the other positions of the crank gives all the other points, and the complete curve may then be described by joining them. We see that the curve is not a circle as in the last case, but differs therefrom in a marked degree. Now plot off the twisting moment at each of the 10 different points by this method on the rectangular diagram (page 287) as before, and we get the dotted line which shows the new diagram of twisting moments. It will be noticed that this curve rises more abruptly during the first quarter of a revolution, and falls flatter during the second quarter than when the obliquity of the connecting-rod is neglected, thus indicating a greater pressure on the crank pin during the first half of the stroke; also, the maximum pressure is reached before half stroke.

We can calculate the several twisting moments in this case without the aid of a scale diagram, thus—

$$\text{The pressure } Q = \frac{P}{\cos\phi}, \text{ also the angle } OCV = \theta + \phi,$$

Since O O P + O O V = 2 right angles, and O O P + θ + ϕ = 2 right angles.

$$\therefore \text{ tangential pressure on crank pin} = T = Q \cdot \sin(\theta + \phi) = \left(\frac{P}{\cos\phi}\right) \sin(\theta + \phi) = P \frac{\sin(\theta + \phi)}{\cos\phi},$$

$$\therefore \text{ the twisting moment} = Pr \frac{\sin(\theta + \phi)}{\cos\phi}.$$

Where $r \sin\theta = l \sin\phi$; r being crank radius, and l the length of connecting-rod.

It is, however, more tedious to work out the results by this formula than by the previous graphic method.

The effect of shortening the connecting-rod is to increase the effort upon the crank pin at the beginning of the stroke, and to decrease it towards the end, thus causing greater irregularity in the tangential pressure on the crank, and greater stress on the crosshead guides. The pressure on the latter is = G = P $\cdot$ tan ϕ, as seen from the last figure and the footnote below it.

The actual state of things which takes place in practice is, however, not so easily represented, for the pressure on the piston is never uniform, but falls away from the point of cut-off. In order, therefore, to construct a truer diagram of the twisting moments, we must find the positions of the

piston corresponding to the various positions of the crank by diagram (Lecture XIV.), and mark these off on the indicator diagram. The steam pressure for the several positions of the crank can then be read off, and their values inserted for, P, in the equation $P \times O V$ or in $P r \sin(\theta + \phi) \div \cos \phi$. The curve of twisting moments on the crank due *merely* to steam pressure on the piston may then be constructed, as shown by the following diagram :—

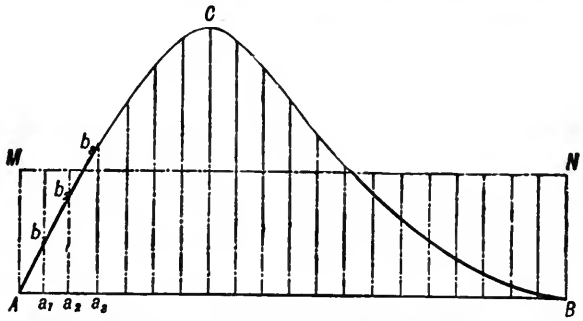

CURVE OF TWISTING MOMENTS, TAKING ACCOUNT OF THE VARIATION OF THE STEAM PRESSURE IN THE CYLINDER, AND WITH A CONNECTING-ROD OF KNOWN LENGTH.

On comparing this curve with the two previous curves, it will be seen that between the points, C and B, it falls much lower ; this is due to the fall of steam pressure during expansion. The rectangle, A M N B, is of the same area as the figure, A C B, and, therefore, A M represents the *mean* twisting moment due to steam pressure on the piston.

When the engine has two cylinders having their pistons working on separate cranks, the curve of total twisting moments on the crank shaft can only be obtained by combining the curves of twisting moments for each crank. This is shown in the following figure, which represents the combined twisting moments on the crank shaft of an engine with two cranks at right angles to each other :—

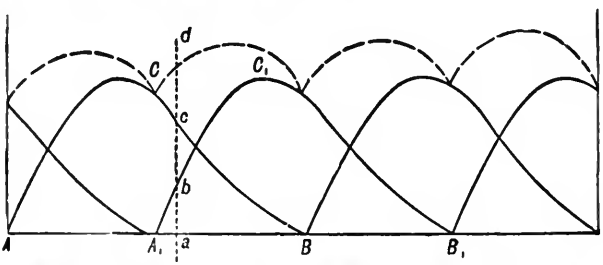

CURVE OF COMBINED TWISTING MOMENTS FOR TWO CRANKS AT RIGHT ANGLES TO EACH OTHER.

A C B is the curve of twisting moments on one crank, and $A_1 C_1 B_1$ the curve of twisting moments on the other crank during one-half revolution, the remaining curves being for the other half revolution. To find the total twisting moment at any point, *a*, draw the vertical line *a d*, and make $a d = a c + a b$ (*i.e.*, the sum of the twisting moments on each crank). By finding a number of points in this way, the whole curve of total twisting moments may be plotted out.

Effect of Inertia of Moving Parts.—In finding the twisting moments by these methods, we have neglected a most important effect—viz., the variation of effort on the crank shaft due to the inertia of the moving parts. Since the piston is brought to rest at the end of each stroke, the inertia of the piston, piston-rod, crosshead, and connecting-rod, has to be overcome at the beginning of each stroke, in order to start the motion, and a portion of the energy of the steam is absorbed in doing this; therefore, the actual effort on the crank in the first half of the stroke is *less* than that given by the curves. The energy which is imparted to the moving parts is, however, given out on the crank during the latter part of the stroke, when these moving parts are being brought to rest; therefore, the effort on the crank during the second half of the stroke is *greater* than that shown by the curves. On the principle of the conservation of energy this alternate acceleration and retardation can neither add to, nor subtract from, the total power developed during the stroke. In ordinary cases, therefore, the inertia of the moving parts acts as a fly-wheel would do, and tends to equalise the effort on the crank. The effect, however, at different parts of the stroke is very interesting and instructive, especially when high-initial pressure and a large range of expansion are adopted, combined with heavy and quickly-moving parts. Allowance may be made for this inertia, if the weight of the moving parts and their velocity are known. We can make an alteration on the indicator diagram, reducing the effective pressure at the beginning of the stroke and increasing it at the end. The steam and the inertia stresses can, however, be combined, only so far as some of the effects are concerned. They are combined, of course, in their pressure on the crank pin, &c., but since the dynamical stresses are not taken up altogether by the engine framing, provision must be made for transmitting them to the engine foundation. These dynamical stresses, introduced by arresting the momentum of the moving parts, produce a much more serious effect in fast-running engines than is usually supposed.

Effect of Inertia on Moving Parts of a Horizontal Engine with Connecting-Rod of Infinite Length.

The student should now try to follow the following investigations and practical examples.

All reference to trigonometry, co-ordinate geometry, and the differential calculus has been dispensed with; and any student with a knowledge of elementary geometry and mechanics will, by carefully following the argument, grasp this subject sufficiently for all practical purposes.

It may be well to state that we shall not take into account *all* the effects resulting from the conversion of reciprocating into circular motion by means of a crank and connecting-rod, but only those effects which directly influence the propelling force on the piston of the engine,* and unless otherwise stated, we shall suppose the engine to be horizontal.

The first case is that in which the motion of the piston is the same as if the engine worked with a connecting-rod of infinite length, such as, for example, in the common donkey engine arrangement where the crank-pin works in a slotted cross-head at right angles to the direction of the piston's motion.

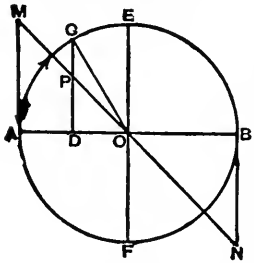

In the figure, let O, be the centre of the crank shaft, O C, the crank, and, A B, the centre line of a horizontal engine of stroke, A B.

From any position of the crank-pin, C, draw the ordinate, C D, at right angles to A B.

Then when the crank-pin is at, C, the piston has evidently moved a distance, A D, and the speed of the piston is always that of the point, D.

When a point, such as D, moves on a diameter so as to always be at the foot of the ordinate drawn through a uniformly revolving point as, C, D, is said to move *harmonically* with, C.

We have to find what force must act on the piston at each moment to make it move thus harmonically.

Now a heavy point, C, moving uniformly in a circle, may be supposed to have its motion compounded of a harmonic motion in the direction, A B, and a harmonic motion in the direction, E F, at right angles to, A B. Each of the forces producing these motions taking effect in its own direction, irrespective of forces and motions at right angles to it.

That is, if, D, be a point of equal weight with, C, the force moving, C, horizontally at any moment is the same as that moving, D, because the horizontal velocity of, C, is always equal to that of, D. The force acting vertically on, C, at any moment makes no difference horizontally.

But the resultant of the vertical and horizontal forces on, C, is the force which compels it to move in a circle, that is, it is equal and opposite to what is commonly termed the *centrifugal force* of, C.

* See Paper by the late Prof. Fleeming Jenkin, published in the *Transactions of the Royal Society of Edinburgh*, vol. xxviii. (1879), p 703, in which will be found a rigorous analysis of the forces in a reciprocating steam engine of practical proportions, accompanied by curves of crank-pin effort.

Therefore the force on the piston making it move harmonically on, A B, is *the horizontal component of the centrifugal force the piston would exert if its weight were concentrated at the centre of the crank-pin and revolved with it.*

If, C O, represents this centrifugal force, then, D O, represents the accelerating force when the piston is at, D.

At the beginning of the stroke, D O = A O. ∴ Erect the perpendicular, A M = A O, to represent the accelerating force when the piston is at, A.

At half stroke, D O = zero.

At any intermediate point, the ordinate, D P, intersected by the straight line, M O, equals, D O, the accelerating force for the position, D.

From half-stroke to the end, the acceleration is negative, and the ordinates must be measured below the line of abscissae. The triangle O B N, equal to, O A M, represents the retarding forces.

The algebraic sum of the two triangles, on the principle of the conservation of energy is zero, because the mass starts from rest and comes to rest again. So the inertia merely affects the *distribution* of power during the stroke, not its amount.

We see that the accelerating force is greatest at the ends of the stroke where the motion is slowest, and is *nil* at half stroke where the motion of the piston is fastest. It is not the velocity, but the *rate of change of velocity* which demands the accelerating force.

We have to find the numerical value of the centrifugal force.

This is given in all elementary treatises on mechanics as—

$$\frac{W\,v^2}{g\,r} = \frac{m\,v^2}{r}.$$

Where, v, is velocity in feet per second, r, is radius of circle in feet, and, m, mass in units of mass.

Engineers do not use this notation, for they speak of so many revolutions per minute in a circle of so many feet radius, and they measure mass by weight.

So $m = \frac{W}{g} = \frac{W}{32}$; W being in lbs., and g the acceleration of gravity.

Let N = number of revolutions per minute.

Then,
$$\frac{m\,v^2}{r} = \frac{W}{32\,r} \cdot \left(\frac{2\,\pi\,r\,N}{60}\right)^2$$

$$,, \quad = \cdot 000341\ W\,r\,N^2.$$

This is a well-known formula for the centrifugal force of a body.

We are now in a position to correct the indicator diagram for any engine, and to say how much less the pressure on the crank-pin is, than that on the piston at the beginning, and how much greater at the end of the stroke.

EXAMPLE I.—The stroke of an engine with a slotted crosshead is 4 feet, the diameter of the cylinder is 20 inches. The effective pressure is 40 lbs. at the beginning and 20 lbs. at the end of the stroke, the weight of the reciprocating mass is 1,256 lbs. What are the pressures on the crank-pin at the beinning and end of the stroke, at 50 revolutions per minute?

Area of a cylinder 20 inches diameter = 314 square inches.

Accelerating force at ends of stroke from the previous formula.

$$\cdot 000341\ W\ r\ N^2 = \cdot 000341 \times 1{,}256 \times 2 \times 2{,}500 = \mathbf{2{,}141\ lbs.}$$

Pressure on piston at beginning of stroke $= 314 \times 40 = \mathbf{12{,}560\ lbs.}$
Pressure on crank-pin at beginning of stroke $12{,}560 - 2{,}141 = \mathbf{10{,}419\ lbs.}$
Pressure on piston at end of stroke $= 314 \times 20 = \mathbf{6{,}280\ lbs.}$
Pressure on crank-pin at end of stroke $= 6{,}280 + 2{,}141 = \mathbf{8{,}421\ lbs.}$

The pressure on the crank-pin is thus much more equable than would be the case if the parts were not possessed of inertia.

Suppose it is required to make the pressure at the beginning exactly equal to that at the end of the stroke, the weight of the parts being unaltered, but the speed changed. What number of revolutions will make the accelerating force at beginning and end of stroke, equal to half the difference of the greatest and least pressures on the piston?

Greatest pressure, ...	=	12,560 lbs.
Least, ...	=	6,280 lbs.
Half difference, . .	=	3,140 lbs.

Let, x, be the number of revolutions required.

Then, $\cdot 000341 \times 1{,}256 \times 2 \times x^2 = 3{,}140$, whence $x = \mathbf{60\ revs.\ nearly.}$

Suppose we are restricted to 50 revolutions, but may vary the weight of the reciprocating parts to obtain the same result.

Let, W, be the weight required.

Then, $\cdot 000341 \times W \times 2 \times 2{,}500 = 3{,}140$, $\therefore$ $W = \mathbf{1{,}840\ lbs.}$

Indicator Diagrams as Modified by Inertia.— To find the pressure as modified by the inertia for *any* point of the stroke, take, A B C D E, as the indicator diagram of an engine.

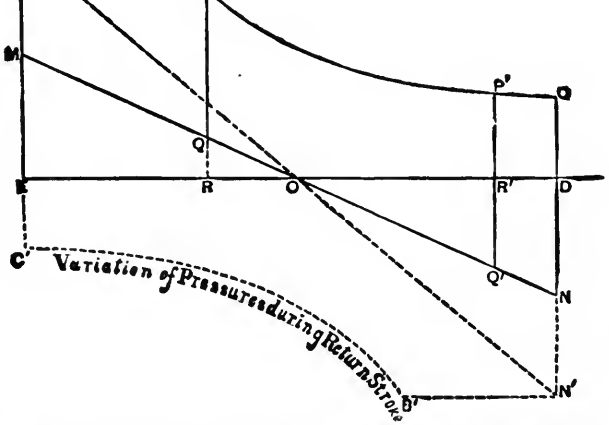

THEORETICAL INDICATOR DIAGRAM CONVERTED INTO A STRESS DIAGRAM ON CRANK-PIN WITH CONNECTING-ROD OF INFINITE LENGTH.

Then to the same scale to which, A E, represents initial steam pressure × area of piston, draw, E M and D N, to represent accelerating force at ends of stroke. Join M and N by the straight line M O N.

Then, M E O D N, is the inertia diagram, and, M O N, thus becomes the virtual base of the figure, from which pressures are to be measured instead of E D. With these heights measured from a horizontal base line the indicator diagram takes the following form :—

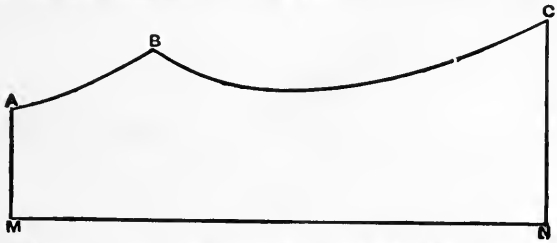

PREVIOUS INDICATOR DIAGRAM CORRECTED FOR INERTIA.

Suppose by increasing the speed of the engine or the weight of the reciprocating parts, the ordinate, E M, becomes equal to, A E, that is, the accelerating force is equal to the whole pressure of the steam on the piston : then there is no pressure on the crank-pin when the engine is on the centre, and as the piston advances the pressure will gradually increase, and become excessive towards the end, even with such a comparatively early cut-off as shown on the diagram in question. The corrected card is as follows :—

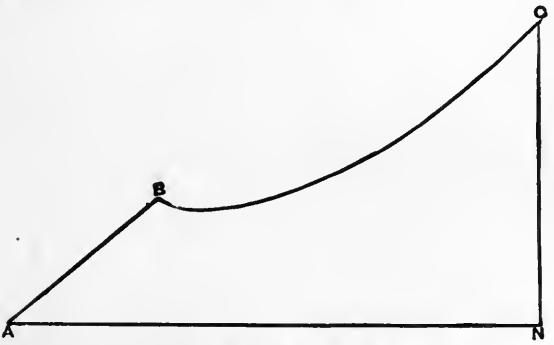

PREVIOUS INDICATOR DIAGRAM CORRECTED FOR INCREASED INERTIA.

With very high speeds or heavy parts the ordinate, E M, may be greater than, E A. The piston will then at the beginning of the stroke lag behind the crank, and be dragged until the acceleration ordinate and steam ordinate become equal. Indeed, with an early cut-off the piston may drag again at a later period of the stroke, as shown in the next figure.

Here the inertia line, M O N, cuts the steam line at, K, L, and R. From, M to K, the pressure is negative, and power represented by area,

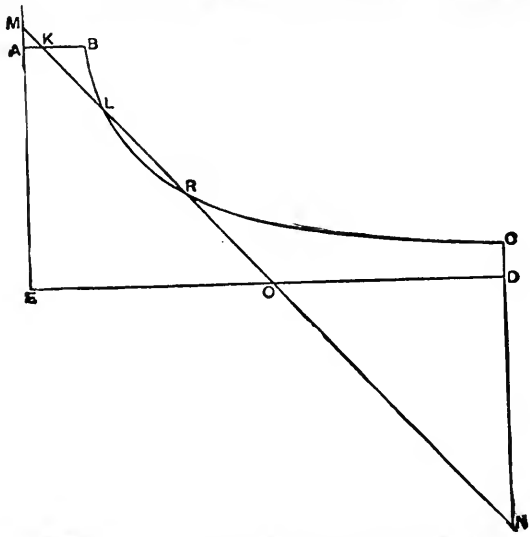

Diagram showing Four Shocks in One Stroke of Piston.

M A K, must be spent on the piston. From, K to L, the piston urges the engine, doing work on the crank equal to, K B L. From, L to R, the piston again drags and absorbs work equal to the loop, L R; and thereafter the piston drives the engine. The corrected diagram is as follows:—

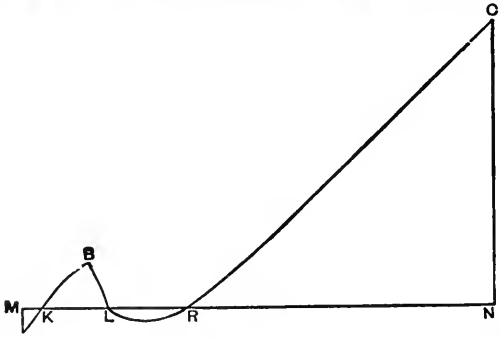

Corrected Diagram for Four Shocks in One Stroke.

It is needless to say that such a condition is not desirable in practice.

We now pass on to the more usual case of engines working with a connecting-rod of finite length.

Connecting-rod of Finite Length.—Let, P C, be the connecting-rod and, C O, the crank.

Then at the commencement of the out-stroke from, A to B, the motion of the piston is more rapid than in the pure harmonic motion, the travel being for a certain position of crank-pin, A D_2, instead of, A D_1. At the

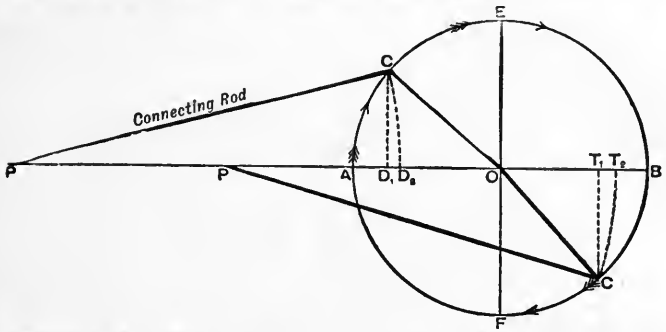

MOTIONS OF PISTON WITH A CONNECTING-ROD OF FINITE LENGTH.

beginning of the return stroke from, B to A, the speed is less than for harmonic motion, the travel corresponding to the position of crank-pin shown being, B T_2, instead of, B T_1.

It is plain that the mere raising or lowering the big end of the connecting-rod in a vertical line, will make, P, approach, O, with a certain acceleration. And the force necessary for this, must be added to that required for true harmonic motion when the engine is on the 'near' centre, A, and subtracted for the 'far' centre, B.

Now, what is this accelerating force?

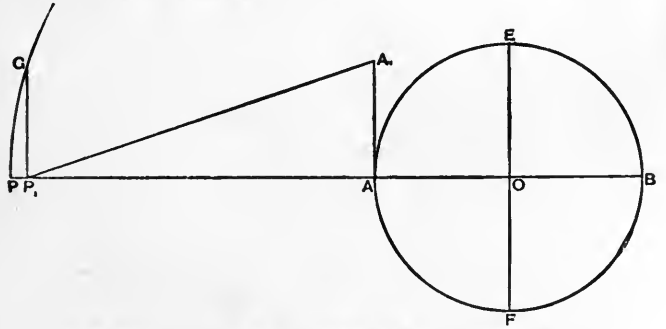

ACCELERATING FORCE AT INNER DEAD CENTRE DUE TO A CONNECTING-ROD OF FINITE LENGTH.

In the above fig., P A, is the connecting-rod as before. We suppose the end, A, to ascend the vertical line, A A_1; then, P, will be drawn to, P_1, and, P_1 A_1, is a position of the connecting-rod.

With centre, A, describe the arc, P G. Now we are only concerned with the velocity of, A, *at the moment it leaves the line, P O:* what its velocity is afterwards cannot affect the acceleration of, P, at that moment.

Suppose, therefore, the point, A, to ascend, $A A_1$, harmonically with the point, G, revolving uniformly in the circle, P G, with the velocity of the crank-pin. Then, obviously, P_1, moves also harmonically with, G, on line, P O.

Therefore, when the big end of the connecting-rod leaves the centre line, P O, with the said velocity, the accelerating force on, P, is the centrifugal force it would have when moving in a circle with radius equal to the connecting-rod, with the velocity of the crank-pin.

But with a given linear velocity, the centrifugal force is inversely as the radius: therefore, if the connecting-rod is, n, times the length of the crank, the accelerating force due to the connecting-rod will be, $\frac{1}{n}$*th*, that due to the crank, and the net accelerating force when the engine is on the near centre will be, $1+\frac{1}{n}$, and when on the far centre, $1-\frac{1}{n}$, times that of an engine with pure harmonic motion.

EXAMPLE II.—The reciprocating parts of an engine weigh one ton. The stroke is 3 feet 6 inches, and the revolutions 80 per minute. The con-

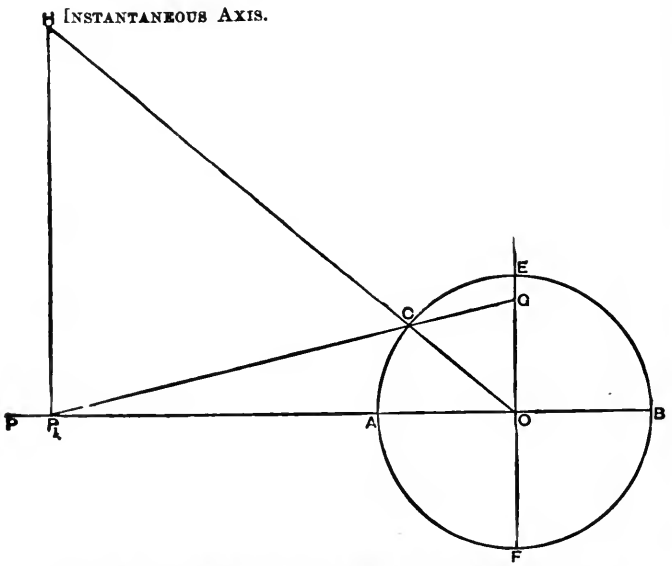

POSITION OF INSTANTANEOUS AXIS OF CONNECTING-ROD, &c.

necting-rod is 7 feet long. What is the accelerating force on the near and far centres?

Here $n = 4$. Therefore the accelerating force on near centre will be—

$$\cdot000341\, W r N^2 \left(1 + \frac{1}{n}\right)$$

$$= \cdot000341 \times 2{,}240 \times 1{\cdot}75 \times 6{,}400 \times \frac{5}{4} = 10{,}700 \text{ lbs.}$$

And on far centre $10{,}700 \times \frac{3}{5} = 6{,}420$ lbs.

It is evident that the accelerating forces, when the engine is on the "dead points," are by far the most important; first, because they are there greatest, and secondly, because the motion of the piston changes its direction there.

We may, however, investigate one other point in the inertia diagram, viz.:—that at which the acceleration is *nil*, or the point where the line corresponding to, M O N, in the figures for an infinite connecting-rod, cuts the base line. (See fig. on previous page).

Obviously the acceleration is *nil* when the speed of the piston is greatest.

Let, $P_1 C$, be any position of the connecting-rod. Produce, $P_1 C$, to cut O E, in, G. Draw, $P_1 H$, at right angles to, P O, and produce, O C, to cut, $P_1 H$, in, H. (See fig. on previous page).

The connecting-rod at any moment is moving about an *instantaneous axis:* and every point in it is, of course, moving at right angles to the line joining it to this axis. The axis is, therefore, somewhere in the line, $P_1 H$, and also somewhere in the line, O C H, for, C, is moving at right angles to, O C.

Therefore, H, *is the instantaneous axis*, and the velocities of, P_1 and C, are in the ratio, $H P_1$ to H C. That is, by similar triangles, the ratio, O G to O C. O G, therefore represents *the velocity of the piston.*

By drawing the length of the connecting-rod on a piece of tracing paper and applying it to the diagram, keeping, P_1, in the line, P O, and, C, in the circumference, a position of, P_1, can be found for which, O G, is a maximum. To find this position of, P, by calculation requires the use of the higher mathematics, which is purposely avoided here.

Take the indicator diagram of an engine as, A B C D E.

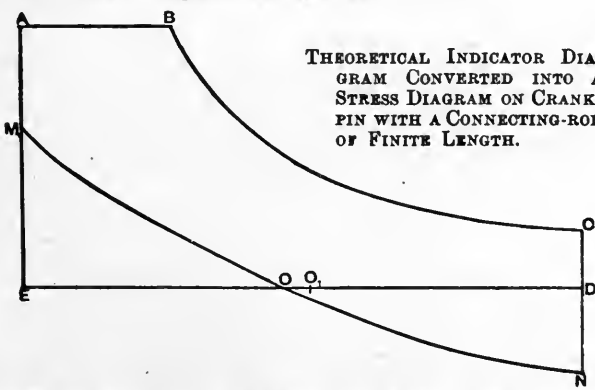

THEORETICAL INDICATOR DIAGRAM CONVERTED INTO A STRESS DIAGRAM ON CRANK-PIN WITH A CONNECTING-ROD OF FINITE LENGTH.

Suppose the connecting-rod is 4 cranks long, a very common proportion.

Find, by trial, with a piece of tracing paper, as above, the position, O, of the piston when its velocity is greatest. With this proportion of

connecting-rod, O, will be found at a distance, $O O_1$, from mid-stroke a little more than $\frac{1}{10}$ of the half stroke, $O_1 E$. Mark off to the proper scale, $E M = 1\frac{1}{4}$ times the centrifugal force of a weight equal to that of reciprocating parts revolving with the crank-pin, and, $D N = \frac{3}{4}$ of that force.

(If the connecting-rod were 5 cranks long these amounts would be respectively $1\frac{1}{8}$ and $\frac{1}{5}$ of the force).

Draw a fair curve through, M O N, bearing in mind that the triangles, M O E, O D N, must be equal in area, representing as they do the same, *vis viva*. Though not mathematically exact, this line, M O N, will very approximately represent the inertia diagram: and the pressures on the crank-pin are measured by vertical lengths, intercepted between, A B C and M O N. Placed on a horizontal base, the amended diagram becomes the following figure.

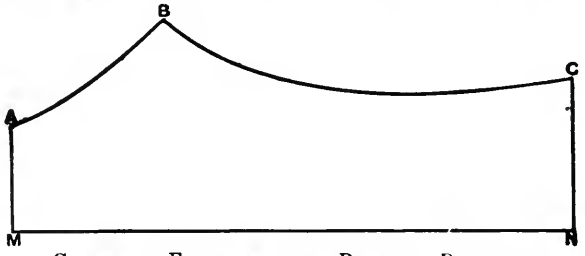

CORRECTED FIGURE FOR THE PREVIOUS DIAGRAM.

It will be seen that a considerable error in the line, M O N, will not greatly affect the shape of the figure, provided the points, M and N, are accurately determined by the method given above. The point, O, has been referred to, not because it is important, but in order to show the student that it is unimportant.

We have hitherto supposed all the reciprocating weights as having the same motion as the piston, and as being concentrated at, P or P_1, the centre of the crosshead. This supposition introduces no error into the estimation of accelerating forces caused by the motion of the crank alone: but in the case of the connecting-rod it will be seen that the motion of its *centre of gravity* caused by moving the "big end" off the centre line (see lower fig. on p. 297), is not the motion of, P_1, towards, A, but one-half that amount, supposing the centre of gravity to be at the middle of the rod. Therefore, strictly, if, W, be the weight of all purely reciprocating parts, such as piston, piston-rod, and crosshead, and, w, the weight of the connecting-rod, the accelerating force on the centre instead of being

$$\cdot 000341\ (W + w)\, r\, N^2 \left(1 \pm \frac{1}{n}\right)$$

is,
$$\cdot 000341\ W\, r\, N^2 \left(1 \pm \frac{1}{n}\right) + \cdot 000341\ w\, r\, N^2 \left(1 \pm \frac{1}{2n}\right).$$

If instead of being horizontal the engine be vertical, the effect of inertia is just the same, but the pressure on the crank-pin will be further affected by the weight of the reciprocating parts, which must be added at every point of the down stroke, and subtracted for the up stroke.

In the case of a diagonal engine, the vertical component of the weight must be so added or subtracted.

Crank Effort Diagrams. — We shall now explain, by aid of the following figure, how to construct a crank effort diagram, when the obliquity of the connecting-rod and the varying pressures on the piston are taken into account.*

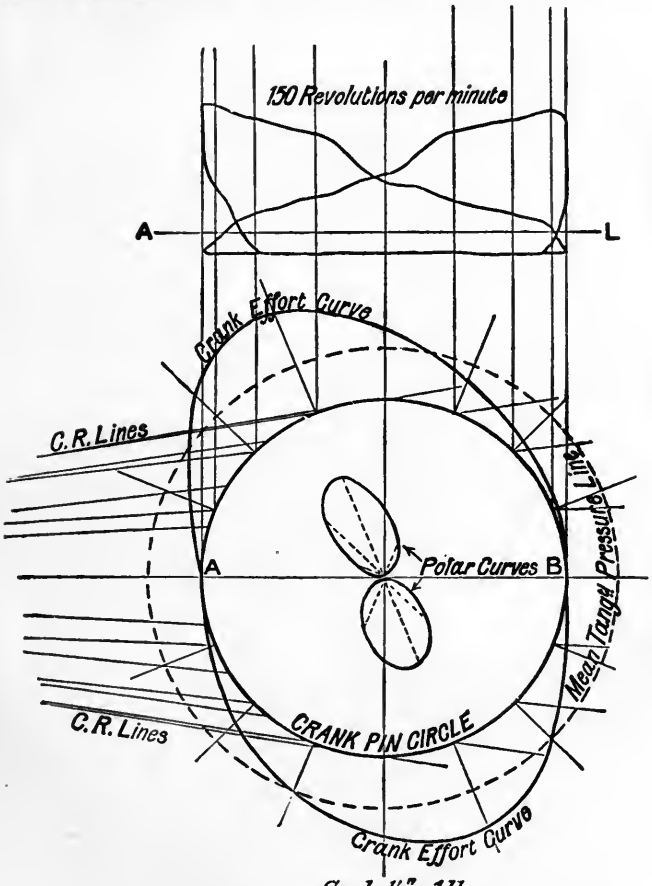

CRANK EFFORT CURVES OF "THE THOMAS RUSSELL ENGINE."

* The front and back indicator diagrams (from which the above crank effort curve has been drawn) were taken from "The Thomas Russell Experimental Steam Engine" in the author's laboratory. The diameter of the cylinder = 6 ins.; length of stroke = 12 ins.: length of connecting-rod = 36 ins.; revolutions per minute = 150.

(1) Transfer the indicator diagrams from the cards to a sheet of paper, taking care to make them at least 4 inches in length for clearness.

(2) Some distance below the redrawn diagrams put down a line, A B, parallel to the atmospheric line and equal in length to the diagrams.

(3) Upon A B, as a diameter, draw the crank-pin circle and divide the same into any convenient number of equal parts.

(4) Project each of these points of division vertically upwards, so as to cut the indicator diagrams.

(5) For the first point to be considered on the crank-pin circle, take that which is vertically over the centre of the crank. Measure the pressure on the piston (from the indicator diagram) corresponding to this point and plot it along the centre line of the connecting-rod as produced through this point.

(6) Resolve this pressure (as plotted along the centre line of the connecting-rod) into two forces at right angles to each other—viz., one along the crank centre line and the other at right angles to it—*i.e.*, tangentially to the crank-pin circle.

(7) Do precisely the same for each of the other positions into which the crank-pin circle is divided.

(8) Produce the several centre lines of the crank for each of these positions and plot off on each centre line, from the crank-pin circle, the corresponding tangential pressure to the same scale as the indicated diagrams. By joining these points the crank effort diagram is obtained.

(9) *To Find the Mean Tangential Pressure Line*—

Let P_m = Mean pressure on piston (from indicator diagrams).

,, r = Radius of crank.

,, P_t = Mean tangential pressure on crank-pin.

Then $$P_m \times 2r = P_t \times \pi r$$

$$\therefore \quad P_t = \frac{P_m \times 2r}{\pi r} = \frac{2P_m}{\pi} = \frac{P_m}{1{\cdot}57}.$$

(10) In drawing the "crank effort curves" for compound, triple, or quadruple expansion engines, the several indicator diagrams have to be reduced to one scale, as explained in Lecture XVI. Then, the several steam pressures (for the several positions assumed on the crank-pin circle), *in the case of the intermediate and low-pressure cylinders*, must be multiplied by the ratios of the areas of those cylinders with respect to the area of the high-pressure cylinder *before* resolving their respective piston pressures along the centre lines of the several positions occupied by their connecting-rods. We have been fortunate in securing, for a practical example with which to illustrate this case, copies of the indicator diagrams taken on the trial trip of a steamer recently built by one of the best Clyde firms. There was nothing abnormal about the diagrams; consequently we need not reproduce them on the combined diagrams to one scale, from which we obtained the following set of "crank effort curves." The "total crank effort curve" is obtained by summing up the pressures on the three-crank effort curves along the respective radial ordinates to the tangential pressures on the crank-pin circle. The "mean crank effort curve" is found, as explained under (9). The chief data connected with this case is given immediately below the figure.

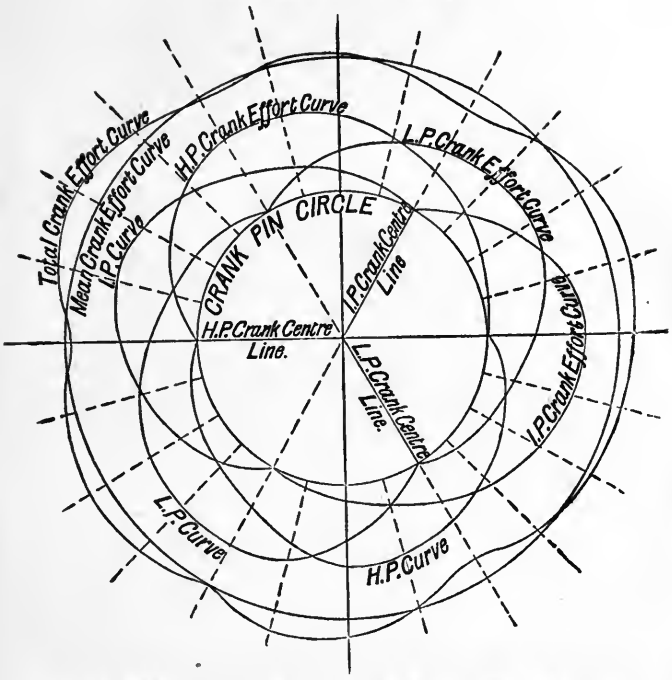

CRANK EFFORT DIAGRAM OF A TRIPLE EXPANSION ENGINE.

Ratio of expansion, 10·4

Length of connecting-rod = 9 feet. Stroke = 4·5 feet.

Mean efficiency of steam, or ratio of area of work in cylinder to full theoretical diagram, 55 per cent.

	H.P.	I.P.	L.P.
Cylinder's diameter, ...	28″	46″	77″
Area, ...	615·8	1661·9	4656·6
Ratio, ...	1	2·80	7·56
Mean pressures, lbs. per sq. in., .	67·6	28·2	9·7
Range of temperatures, Fah., .	64·3°	74·9°	80·6°

Steam, 164 lbs.; Vacuum, 26½ ins.; Receivers, 52 and 5 lbs.; Revolutions, 62¼ per minute.

Cut-off H.P. = 33½ ins.	I.H.P. = 710 L.P.
,, I.P. = ,,	,, = 799 I.P.
,, L.P. = ,,	,, = 764 H.P.
	2273 total I.H.P.

Crank Effort Diagram of the Quadruple-Expansion Five-Crank Engines of S.S. "Inchdune."—The illustrated description of these engines is given in Lecture XXIII. The necessary calculations with explanations and the drawings from which the accompanying folding-plate has been directly reproduced by photography were kindly supplied to the author by his old student, Mr. William C. Borrowman, M.Inst.C.E., General Manager of the Central Marine Engineering Works, West Hartlepool, who designed the arrangement of engines and boilers.

The following calculations show clearly how the foregoing educational illustrations and descriptions are applied in practice. The results thus obtained were highly gratifying to the designer, not only in the even subdivision of the powers derived from the five cylinders, but in the mean crank effort diagram, comparative freedom from stresses and vibration; but also in the unprecedented economy in steam and coal of these engines and boilers. (*See the facing folding-plate.*)

S.S. "Inchdune" Engines.

Preliminary Data.—

Diameter of cylinders, . . 17, 24, 34, 42, 42 inches.
Length of stroke, ... 42 ,,
Diameter of piston-rods, ... $4\frac{1}{2}$,,
Length of connecting-rod, ... $7\frac{1}{2}$ feet.
Boiler pressure = 265 lbs. by gauge, or 280 lbs. absolute.
Vacuum by gauge, ... = 27 inches.

Method of Calculating Inertia and Gravitating Effect of the Reciprocating Parts—viz., piston, piston-rod and $\frac{1}{2}$ connecting-rod. (The crank-pin, webs, and $\frac{1}{2}$ connecting-rod are supposed to balance each other.)

Inertia effect for an infinite connecting-rod $= \frac{W v^2}{g r} = \frac{v^2}{g} = \frac{(2\pi \times N)^2}{(60)^2 \times 32{\cdot}2}$

,, ,, $= \frac{(2\pi N)^2}{32{\cdot}2 \times 60^2} = \frac{4 \times 22 \times 22 \times 100^2}{7 \times 7 \times 32{\cdot}2 \times 60^2}$

,, ,, $= 3{\cdot}4056.$

When W = 1 ton (weight of reciprocating parts).
r = 1 foot = radius of crank-pin circle.
N = 100 revolutions per minute.
v = velocity of crank-pin in feet per second.

Correction of inertia effect for finite rod $\Big\}$ = $\Big\{$ Inertia effect for an infinite connecting-rod × constant.

$$\text{,,} \qquad \text{,,} \qquad = 3{\cdot}4056 \times \cos\theta + \frac{n^2 \cos 2\theta + \sin^4\theta}{(n^2 - \sin^2\theta)^{\frac{3}{2}}} = \pm f.$$

When θ = angle made by crank with line of stroke.

l = length of connecting feet in feet.

r = length of crank in feet.

$$n = \frac{\text{length of connecting-rod}}{\text{length of crank}} = \frac{l}{r}.$$

But, as inertia effect increases directly as W, r, and N^2,

$$\therefore \qquad \pm f\left(W \times r \times \frac{N^2}{(100)^2}\right) = \pm f \times \text{a constant.}$$

In this case, $n = \dfrac{\text{length of connecting-rod}}{\text{length of crank}} = \dfrac{l}{r} = \dfrac{7{\cdot}5}{1{\cdot}75} = 4{\cdot}285.$

N = revolutions per minute = 70.

l = length of connecting-rod = 7·5 feet.

r = radius of crank = 1·75 feet.

Then, $$\text{Inertia effect} = \pm f\left(Wr\,\frac{N^2}{(100)^2}\right)$$

$$\text{,,} \qquad \text{,,} \qquad = \pm f\left(W \times 1{\cdot}75 \times \frac{70 \times 70}{100 \times 100}\right).$$

Hence, Total effect of inertia and gravitation, F $\Big\}$ $$= \pm f\left(W \times 1{\cdot}75 \times \frac{70 \times 70}{100 \times 100}\right) + W.$$

(For down stroke.)

$$\text{,,} \qquad \text{,,} \qquad \text{,,} \qquad = \mp f\left(W \times 1{\cdot}75 \times \frac{70 \times 70}{100 \times 100}\right) - W.$$

(For up stroke.)

Cylinder Number.	Weight of Reciprocating Parts in Tons.	Total Inertia and Gravitation Effect.
1	·9569	$\pm (f \times \cdot 8205) \pm \cdot 957$
2	1·108	$\pm (f \times \cdot 9501) \pm 1{\cdot}108$
3	1·437	$\pm (f \times 1{\cdot}2327) \pm 1{\cdot}437$
4F	1·4634	$\pm (f \times 1{\cdot}2549) \pm 1{\cdot}463$
4A	1·59	$\pm (f \times 1{\cdot}3634) \pm 1{\cdot}590$

Crank Effort Diagrams for No. 1 Cylinder of S.S. "Inchdune" during the Down Stroke.

Crank Angle in Degs.	Crank Leverage in Inches.	Steam Pressure in Lbs. per Sq. Inch Absolute.	Total Pressure on Piston in Tons.	f		Constant.		Inertia in Tons.		Weight of Reciprocating Parts, W, in Tons.		Gravity and Inertia Effect, F, due to Reciprocating Parts, in Tons.*	Turning Moment, TM, in Inch-Tons, due to Gravity and Inertia only.	Turning Moment, TM, in Inch-Tons, due to Steam only.	Total Turning Moment, TM, in Inch-Tons, due to Gravity, Inertia and Steam.
0	0	147	14·890	−4·200	×	·8205	=	−3·446	+	·957	=	−2·489	0	0	0
10	4·48	146	14·790	−4·102	×	·8205	=	−3·366	+	·957	=	−2·409	−10·792	66·258	55·466
20	8·74	140	14·182	−3·815	×	·8205	=	−3·130	+	·957	=	−2·173	−18·992	123·951	104·959
30	12·61	134	13·574	−3·358	×	·8205	=	−2·755	+	·957	=	−1·798	−22·672	171·171	148·499
40	15·94	127	12·865	−2·759	×	·8205	=	−2·264	+	·957	=	−1·307	−20·833	205·069	184·236
50	18·52	122	12·359	−2·060	×	·8205	=	−1·690	+	·957	=	− ·733	−13·575	228·881	215·306
60	20·34	118	11·953	−1·299	×	·8205	=	−1·066	+	·957	=	− ·109	− 2·217	243·132	240·915
70	21·33	116	11·751	− ·546	×	·8205	=	− ·448	+	·957	=	+ ·509	+10·857	250·645	261·502
80	21·52	111	11·244	+ ·175	×	·8205	=	+ ·144	+	·957	=	+1·101	+23·693	241·977	265·670
90	21·00	103	10·434	+ ·817	×	·8205	=	+ ·670	+	·957	=	+1·627	+34·167	219·112	253·279
100	19·80	80	8·104	+1·357	×	·8205	=	+1·113	+	·957	=	+2·070	+40·986	160·459	201·445
110	18·11	61	6·179	+1·784	×	·8205	=	+1·464	+	·957	=	+2·421	+43·844	111·907	155·751
120	16·01	37	3·748	+2·107	×	·8205	=	+1·729	+	·957	=	+2·686	+43·003	60·007	103·010
130	13·82	− 8	− ·810	+2·318	×	·8205	=	+1·902	+	·957	=	+2·859	+39·511	−11·200	28·311
140	11·05	− 48	− 4·862	+2·458	×	·8205	=	+2·017	+	·957	=	+2·974	+32·862	−53·729	−20·867
150	8·36	− 90	− 9·117	+2·541	×	·8205	=	+2·085	+	·957	=	+3·042	+25·431	−76·218	−50·787
160	5·52	−120	−12·156	+2·585	×	·8205	=	+2·121	+	·957	=	+3·078	+16·990	−67·101	−50·111
170	2·92	−131	−13·270	+2·605	×	·8205	=	+2·137	+	·957	=	+3·094	+ 9·035	−38·749	−29·714
180	0	−140	−14·182	+2·611	×	·8205	=	+2·142	+	·957	=	+3·099	0	0	0
															2,066·87

* It will be seen for this column that, for the same position of the piston, the combined inertia and gravitation effect for the *up stroke* is the same as for the *down stroke*, but with the signs changed.

Crank Effort Diagrams for No. 1 Cylinder of S.S. "Inchdune" during the Up Stroke.

Crank Angle in Degs.	Crank Leverage in Inches.	Steam Pressure in Lbs. per Sq. Inch Absolute.	Total Pressure on Piston in Tons.	f	Constant.	Inertia in Tons.	Weight of Reciprocating Parts, W, in Tons.	Gravity and Inertia Effect, F, due to Reciprocating Parts, in Tons.*	Turning Moment, TM, in Inch-Tons, due to Gravity and Inertia only.	Turning Moment, TM, in Inch-Tons, due to Steam only.	Total Turning Moment, TM, in Inch-Tons, due to Gravity, Inertia and Steam.
180	0	140	13·188	−2·611	× ·8205	= −2·142	− ·957	= −3·099	0	0	0
190	2·92	140	13·188	−2·605	× ·8205	= −2·137	− ·957	= −3·094	− 9·035	38·509	29·474
200	2·52	140	13·188	−2·585	× ·8205	= −2·121	− ·957	= −3·078	−16·990	72·800	55·810
210	8·36	139	13·094	−2·541	× ·8205	= −2·085	− ·957	= −3·042	−25·431	109·464	84·033
220	11·05	138	13·000	−2·458	× ·8205	= −2·017	− ·957	= −2·974	−32·862	143·646	110·784
230	13·82	133	12·529	−2·318	× ·8205	= −1·902	− ·957	= −2·859	−39·511	173·144	133·633
240	16·01	129	12·152	−2·107	× ·8205	= −1·729	− ·957	= −2·686	−43·003	194·550	151·547
250	18·11	124	11·681	−1·784	× ·8205	= −1·464	− ·957	= −2·421	−43·844	211·539	167·695
260	19·80	117	11·021	−1·357	× ·8205	= −1·113	− ·957	= −2·070	−40·986	218·224	177·238
270	21·00	112	10·550	− ·817	× ·8205	= − ·670	− ·957	= −1·627	−34·167	221·558	187·391
280	21·52	102	9·608	− ·175	× ·8205	= − ·144	− ·957	= −1·101	−23·693	206·773	183·080
290	21·33	76	7·159	+ ·546	× ·8205	= + ·448	− ·957	= − ·509	−10·857	152·706	141·849
300	20·34	53	4·993	+1·299	× ·8205	= +1·066	− ·957	= + ·109	+ 2·217	101·549	103·766
310	18·52	32	3·014	+2·060	× ·8205	= +1·690	− ·957	= + ·733	+13·575	55·827	69·402
320	15·94	− 13	− 1·225	+2·759	× ·8205	= +2·264	− ·957	= +1·307	+20·833	− 19·520	1·313
330	12·61	− 62	− 5·840	+3·358	× ·8205	= +2·755	− ·957	= +1·798	+22·672	− 73·647	−50·975
340	8·74	−122	−11·492	+3·815	× ·8205	= +3·130	− ·957	= +2·173	+18·992	−100·444	−81·452
350	4·48	−158	−14·883	+4·102	× ·8205	= +3·366	− ·957	= +2·409	+10·792	− 66·678	−55·886
360	0	−162	−15·260	+4·200	× ·8205	= +3·466	− ·957	= +2·489	0	0	0
											1,408·702

* It will be seen for this column that, for the same position of the piston, the combined inertia and gravitation effect for the *up stroke* is the same as for the *down stroke*, but with the signs changed. The turning moments for each of the other cranks were ascertained in the same way for their down and up strokes. The mean results are given in the next table.

Effective crank leverage calculated from the following formula:—

$$\text{Effective leverage, L, of crank at angle } \theta = r \sin \theta \left(1 + \frac{r \cos \theta}{\sqrt{l^2 - r^2 \sin^2 \theta}}\right).$$

When, θ = angle of crank with line of stroke.
r = length of crank in feet.
And l = length of connecting-rod in feet.

Travel of piston, T, from commencement of stroke when crank is at an angle $\theta = r(1 - \cos \theta) \pm l \mp \sqrt{l^2 - r^2 \sin^2 \theta}$.

Down stroke :—

$$\text{Total inertia and gravitation effect, F} = \mp f\left(\text{W}r\frac{\text{N}^2}{(100)^2}\right) + \text{W}.$$

$$\text{,, ,,} = \mp f\left(\cdot 9569 \times 1 \cdot 75 \times \frac{70 \times 70}{100 \times 100}\right) + \cdot 9569.$$

$$\text{,, ,,} = \mp f \times \cdot 8205 + \cdot 9569.$$

Up stroke :—

$$\text{Total inertia and gravitation effect, F} = \mp f\left(\text{W}r\frac{\text{N}^2}{(100)^2}\right) - \text{W}.$$

$$\text{,, ,,} = \mp f\left(\cdot 9569 \times 1 \cdot 75 \times \frac{70 \times 70}{100 \times 100}\right) - \cdot 9569.$$

$$\text{,, ,,} = \mp f \times \cdot 8205 - \cdot 9569.$$

$$\text{Mean turning moment, T M, in inch-tons for No. 1 cylinder} = \frac{\text{Total T M during down stroke + total T M during up stroke}}{36}$$

$$\text{,, ,,} = \frac{2066 \cdot 89 + 1408 \cdot 70}{36}$$

$$= \frac{3475 \cdot 6}{36} = 96 \cdot 544 \text{ inch-tons.}$$

NOTE.—Piston-rod areas have been deducted in working up the mean pressures of the indicator cards.

$$\text{Mean turning moment, T.M, from I.H.P.} = \frac{\text{I H.P.} \times 33{,}000 \times 12}{2{,}240 \times 2\pi \times \text{revolutions per min.}}.$$

TABLE SHOWING THE I.H.P. MEAN TURNING MOMENTS FOR EACH CRANK, AND THE TOTALS FOR THE S.S. "INCHDUNE."

Cylinder Number	Indicated Horse-Power. I.H.P.	Mean Turning Moment, T M, from I.H.P.	Mean Turning Moment, T M, from above Calculation.
1	240	96·52	96·54
2	236	94·91	94·34
3	252	101·24	101·40
4F	263	105·76	106·13
4A	278	111·80	111·87
Total, -	1,269	510·33	510·28

EXAMPLE III.—What is the effect of inertia and gravitation on the reciprocating parts of a vertical engine having a stroke of 42 inches, connecting-rod equal 4 cranks, weight of reciprocating parts 2 tons, position of crank from commencement of down stroke 30°, revolutions per minute 72?

$$F = W \left\{ \left(- fr \frac{N^2}{(100)^2} \right) + 1 \right\}$$

$$F = 2 \left\{ \left(- 3{\cdot}3876 \times 1{\cdot}75 \times \frac{(72)^2}{(100)^2} \right) + 1 \right\} = - 4{\cdot}15 \text{ tons.}$$

LECTURE XVIII.—QUESTIONS.

1. In a double-acting engine the mean pressure on the piston is 4 tons and the length of the stroke 18 inches, what is the mean pressure which can be taken from the rim of the fly-wheel, the estimated diameter of which is 8 feet? *Ans.* 1069 lbs. (about).

2. The crank of a steam engine is 2 feet long, and the mean tangential force acting upon it is 17,000 lbs., what is the mean pressure of the steam upon the piston of the engine during each stroke? *Ans.* 26703·6 lbs.

3. In a direct-acting engine the diameter of the cylinder is 17 inches, and the mean pressure of the steam 60 lbs., the crank being 12 inches long, what is the mean pressure on crank in the direction of its motion? *Ans.* 8,670 lbs.

4. Explain the manner in which the reciprocating motion of the piston in a locomotive engine is converted into the rotatory motion of the crank shaft. What are the dead points? Show by the principle of work that there is no loss of power by the intervention of the crank, friction being disregarded.

5. Explain the method of representing in a diagram, the work done during one revolution of the crank of an engine by setting off ordinates representing the tangential efforts on the crank pin.

6. In a direct-acting engine the crank and connecting-rod are as 1 to 6. Find an expression for the tangential pressure on the crank pin in any position. Construct an approximate diagram of work done upon the crank during the stroke, and give a sketch of the same, (1) when there is a single cylinder, and (2) when there are two cylinders working cranks at right angles.

7. In a horizontal direct-acting engine you are required to find an expression for the tangential force upon the crank pin in any given position of the crank. Example—The lengths of the crank and connecting-rod being 1 and 6 respectively, and the pressure on the steam piston being 2,000 lbs., estimate the tangential force on the crank when in a vertical position. Find also the vertical force acting upon the crank shaft. *Ans.* 2,000 lbs. 333 lbs.

8. In a direct-acting horizontal engine the length of the crank 1 foot and that of the connecting-rod is 5 feet. When the crank is vertical the pressure of the steam on the piston is 4,000 lbs.; find the thrust along the connecting-rod, and the pressure on the guide bars at that point of the stroke. *Ans.* 4082·5 lbs.; 816·5 lbs.

9. If the cylinder of a locomotive be 20 inches in diameter with a stroke of 2 feet, and the diameter of the driving wheel be 6 feet, find the tractive force exerted by the engine for each pound of pressure per square inch on the piston. *Ans.* 66·6 lbs.

10. Explain the effects of the inertia of the reciprocating parts in a reciprocating engine, and taking a particular case, work out a crank-pin stress diagram.

11. Draw an indicator diagram of a corliss (or some engine with instantaneous cut-off), in which the cut-off took place at $\frac{1}{4}$ stroke. From this construct a diagram of crank effort (1) for a single cylinder engine, (2) for double cylinder engine with cranks at right angles.

12. In a direct-acting engine, find the ratio of the velocity of the crank-pin to that of the piston in any given position of the crank.

13. The crank of an engine has a radius of 18 inches, the connecting-rod is 6 feet long, and the number of revolutions made by the engine is 80 per minute. Find graphically or otherwise the velocity of the piston in feet per second when the crank has passed through an angle of 30° from the dead centre during the forward stroke. *Ans.* 7·65 feet per second.

14. In a direct-acting horizontal engine, where the connecting-rod works between guides, the connecting-rod is five times as long as the crank, the pressure on the piston when the crank is vertical being 1,250 lbs.; find the thrust on the slide bar, neglecting friction, and indicate the direction in which it acts. Does the direction of the thrust change during any part of the revolution? *Ans.* 255 lbs.

15. In a direct-acting engine the crank is 2 feet in length, and the connecting-rod is 8 feet; find the distance in inches of the piston from the middle point of its stroke, when the crank is at 90° from a dead centre. Answer this by calculation as well as graphically. *Ans.* 3·05 inches.

16. A steam engine with a cylinder of D inches in diameter, receives steam at 80 lbs. absolute pressure per square inch, and the cut-off is at $\frac{7}{8}$ of the stroke. Find an expression for the diameter of the cylinder of another engine with the same stroke and piston speed which develops the same horse-power as the first engine, but which cuts off the steam at $\frac{1}{2}$ stroke. What would be the relative maximum stresses on the crank-pin and crank-shaft of the two engines when both transmit the same power, the inertia of the reciprocating parts and the obliquity of the connecting-rod being neglected?

17. What is the effect of inertia and gravitation on the reciprocating parts of a vertical engine having a stroke of 60 inches; connecting-rod equal four cranks; weight of reciprocating parts, 3 tons; position of crank from commencement of up stroke, 30°; revolutions per minute, 150? Plot the inertia and leverage diagram for this engine, making the radius of the diagram equal by scale to the calculated centrifugal force or inertia effect for an infinite connecting-rod acting at the commencement of stroke upon the crank-pin.

$$F = W\left\{\left(-fr\frac{N^2}{100^2}\right) - 1\right\} = 3\left\{\left(-2{\cdot}5099 \times 2{\cdot}5 \times \frac{150^2}{100^2}\right) - 1\right\}$$

$$F = -45{\cdot}354 \text{ tons.}$$

18. Describe and show graphically how the force transmitted to the crank-pin is affected by the inertia of the moving reciprocating parts in a stationary horizontal engine during the forward and backward strokes of the piston respectively. How is the force affected by an increase in the ratio of expansion of the steam, by the shortness of the connecting-rod, and by the momentum of the flywheel? In a horizontal non-condensing engine, whose cylinder is 16 inches diameter, stroke 28 inches, connecting-rod 5 feet 10 inches in length, making 100 revolutions per minute, and working with steam whose initial gauge pressure is 140 lbs. per square inch, when cutting-off takes place at four-tenths of the stroke, what would be the pressure on the crosshead at the beginning and at the end of the stroke if the weight of the reciprocating parts is 350 lbs.? and show, by a diagram, the variation in the pressure as the piston makes its forward stroke, the effect of the cushioning of the steam at the end of the stroke being neglected; expansion as if pv were constant.

19. The piston and all that is rigidly connected with it weigh 500 lbs., the crank is 1 foot long, and the speed 200 revolutions per minute. Show, on a diagram, the forces which must be exerted at the crosshead during a

revolution if there is no steam pressure. Choose a pair of indicator diagrams, and show how we find the diagram of forces acting at the crosshead. Assume an infinitely long connecting-rod.

20. If, on a piston of 120 square inches in area and weighing with piston-rod 290 lbs., there is at a certain instant a pressure of 130 lbs. per square inch on one side more than what there is on the other, and if the piston acceleration at that instant is 420 feet per second per second in the direction in which the steam is urging the piston, what is the total force acting at the crosshead? If this acceleration occurs when the piston is one-quarter of its stroke from one end, assuming an infinitely long connecting-rod, how many revolutions per minute is the engine making? The crank is 1 foot long.

21. Explain fully the influence of the reciprocating parts in modifying the effective steam pressure in an engine, and show how to make the calculations necessary in order to determine the weight of flywheel needed to keep the fluctuation of speed during one revolution of an engine within any chosen limit.

22. If the connecting-rod is 5 feet long, and the crank is 1 foot; 200 revolutions per minute; what are the accelerations of the piston when it is farthest from and nearest to the crank? The piston and rod and crosshead weigh 330 lbs. Area of piston 120 square inches. At the beginning of either the in or out stroke the pressure is 80 lbs. per square inch on one side in excess of what it is on the other. Find the total forces on the crosshead in these two cases. *Ans.* Acceleration when piston is farthest from crank, 524·17 ft. per sec. per sec.; acceleration when piston is nearest to crank, 349·44 ft. per sec. per sec.; total force on crosshead at beginning of out-stroke is 15,005·5 lbs.; total force on crosshead at beginning of in-stroke is 13,203·3 lbs.

23. Sketch a real probable indicator diagram for a non-condensing engine, single cylinder, 18 inches diameter, crank 15 inches, 150 revolutions per minute, cutting off at about half-stroke, with slide-valve. Neglecting inertia effects, show how we find the turning moment on the crank-shaft in every position, and how it usually varies. What effect has this change of moment upon the strength of the crank-shaft?

24. Piston 115 square inches in area. At the beginning of either stroke there is a difference of pressure of 90 lbs. per square inch on its two sides, producing total force in the direction in which the piston is about to move. The piston and its rod weigh 410 lbs. The engine makes 130 revolutions per minute; crank 1 foot. Neglecting angularity of connecting-rod—that is, assuming that the piston has a simple harmonic motion—what is the actual force at the crosshead at the beginning of either stroke? What correction must be made when the angularity of the connecting-rod is not neglected.

25. Explain what is meant by the "pressure due to the inertia of the reciprocating parts" in a steam engine, and show how it modifies the effective crank effort at different points of the stroke. If the revolutions per minute are 400 and the mean piston speed 1,200 feet per minute, show that, with a 4 to 1 rod, the maximum inertia pressure is, very approximately, fifty times the weight of the reciprocating parts.

Lecture XVIII.—A.M.Inst.C.E. Questions.

1. What is meant by the instantaneous axis of a moving piece? How do you find it in the case of a connecting-rod, and how do you apply it to find the velocity of the piston at any point of its stroke, when the velocity of the crank-pin is known?

2. Show how to find the acceleration of an engine piston at each end of its stroke when the length of the connecting-rod, the length of the stroke, and the number of revolutions per minute are given. Find the force required for acceleration per lb. mass of the piston, at each end of the stroke, in an engine with an 8-inch crank and 30-inch connecting-rod making 300 revolutions per minute. *Ans.* 20·1 lbs. at outer end; 21 at inner end.

3. What is a crank-effort diagram? What data are required to allow it to be drawn, and how is it applied in finding the fluctuations of speed in an engine when the dimensions and speed of the flywheel are known?

4. A piston and its rod and crosshead weigh 460 lbs. The engine makes 250 revolutions per minute, the crank is 1 foot long. Make a diagram of the horizontal force at the crosshead at every point in the stroke; (1) assuming the connecting-rod infinitely long; (2) taking the connecting-rod to be 5 feet long. State the force at some one place so that your scale may be checked. Assume no friction. *Ans.* (1) 9,860 lbs.; (2) 11,380 lbs.; (3) 7,888 lbs.

5. Show how to find graphically the acceleration of the piston of a direct-acting engine in any position, the crank-pin being assumed to move uniformly. Sketch the form of the curve of acceleration (1) on a piston, and (2) on a crank angle base. Describe generally the influence of the inertia of the piston, rods and crosshead, on the stresses set up in the crank-pin. The weight of the reciprocating parts is equivalent to 3 lbs. per square inch of the area of the piston. If the length of crank be 9 inches, find how much the initial effective pressure is reduced by the inertia of the reciprocating parts when the crank makes 70 revolutions per minute, the obliquity of the connecting-rod being neglected.

6. The weight of the reciprocating parts of a single-cylinder engine is 4,040 lbs., the stroke is 39 inches, and the revolutions 143 per minute; the diameter of the cylinder is 33·5 inches, and the length of the connecting-rod is twice the stroke. Find "the pressure equivalent to the inertia" at each end of the stroke. *Ans.* 65·3 lbs. per square inch at inner; 39·2 at outer end.

7. Estimate the greatest and least forward velocity of the piston of a locomotive engine relative to the rails when the train is running at 50 miles per hour, the diameter of the driving-wheels being 66 inches, the length of stroke 27 inches, and the length of engine connecting-rod 54 inches.

8. Having given the indicator diagrams of a steam engine, explain what corrections have to be made and how the corrections modify the result, before the effective turning moment on the crank-shaft can be determined. If the revolutions per minute are 400 and the piston speed 1,200 feet per minute, show that if the connecting-rod is four times the length of the crank radius the maximum inertia pressure is, very approximately, fifty times the weight of the reciprocating parts.

LECTURE XIX.

CONTENTS.—Stationary Land Engines—Horizontal Non-condensing Steam Engine—Horizontal Condensing Steam Engine—Compound Non-condensing Steam Engine with Locomotive Boiler—Coupled Compound Condensing Engine, with Data *re* Crosshead, &c.—Questions.

HAVING discussed in the previous eighteen lectures, the early history of fixed engines up to the beginning of this century, the nature of heat and how it is measured, the generation of steam, as well as its action and distribution in non-condensing, condensing, compound, and multiple expansion engines, we now enter upon the description of a few selected examples of land engines, and of a combined engine with boiler, which have proved to be of good design and workmanship for their purposes.

Within the last eighty years there have been, and there are at present in use, a multitude of styles and types of engines, each more or less specially adapted for different classes of work, such as pumping water from mines, raising water for the supply of towns, draining lands, blowing air into smelting furnaces, driving agricultural machinery, steam cranes, and such like, all of which it is impracticable to treat of fully in this work; for it is impossible in the few remaining lectures at our disposal to do more than indicate the general design with some of the more important details, of the various examples which we have selected. In some instances, we shall give the actual specifications from which the engines were made, as we know from our own experience, that an apprentice or young engineer (unless he is particularly fortunate and happens to be in the drawing office) has little or no chance of perusing them. We shall also have occasion to devote two lectures to the rise and progress of the Marine Engine, and part of another to that of the Locomotive Engine.

In the present lecture we shall describe three styles of fixed or stationary horizontal land engines, designed by Messrs. Marshall, Sons & Co., Limited, of Gainsborough, which firm has a high reputation for excellence of workmanship and design, brought about by many years of experience and constant attention to special requirements and to small details,

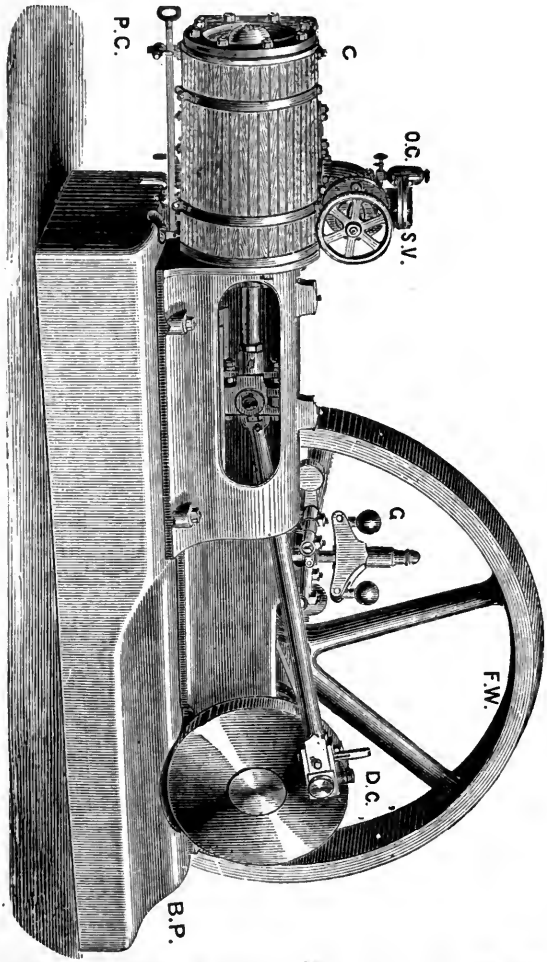

MARSHALL'S HORIZONTAL NON-CONDENSING STEAM ENGINE.

S V for Stop valve.
C ,, Cylinder.
O C ,, Oil cup.
P C ,, Pet cocks.

B P for Bed plate.
D C ,, Disk crank.
G ,, Governor.
F W ,, Fly-wheel.

Horizontal Non-condensing Engine.—The form of engine which is illustrated above, is specially adapted for driving small works, or dynamo machinery, where economy of coal and of water is not of the first or of vital consideration, but where uniform speed, freedom from breakdown, and simplicity of construction are of great consequence. It is usually made in sizes varying from 36 to 105 indicated horse-power, and supplied with

steam from an ordinary Lancashire boiler (Volume II.), or from a boiler of the multitubular locomotive type at a pressure of 40 to 80 lbs., according to circumstances. As the general construction of this engine is very similar to that of the non-condensing parts in the next set of illustrations, of which we shall give a complete descriptive specification, we need only refer the student to the figure on the last page and the index of parts.

Horizontal Condensing Engine.—This style of engine is much used to drive factories and engine works, where a uniform speed is necessary, and where it is advisable to economise fuel by condensing the steam and returning the feed water warm to the boiler, but where the condensing water is of good quality admitting of the adoption of the jet condenser. It virtually consists of the engine previously illustrated with the addition of a condenser, an air pump, and feed pump. It is also fitted as in the case of the previous engine with Hartnell's Automatic Expansion Gear, which so regulates the cut-off or expansion valve (working on the back of the main slide valve), that steam is admitted to the cylinder in almost direct proportion to the load to be overcome. This ensures an almost perfect uniformity of speed, whether many or few of the factory machines are set to work, or whether few or many of the electric lights are in circuit when these engines are applied to driving dynamos. The construction and action of this engine will be best understood by following the drawings and specification for one of 80 I.H.P.

General Construction.—The engine is erected on a heavy bed-plate, B P, of hollow girder pattern, truly planed on the underneath surface. This bed-plate is arranged so as to form at one end the front cover for the cylinder, C, and at the other end the main bearing for the crank shaft, C S. Sliding surfaces for the cross-head, C H, are embodied in the same casting. The crank shaft is constructed with a disk crank, D C, and a pin for the attachment of the connecting-rod, C R. The outer bearing for the crank shaft is on a separate foundation with plummer block, P B. Sufficient room is afforded on the crank shaft by the side of the fly-wheel, F W, for the application of a pulley to give off the whole or a portion of the power if required.

The engine in all its parts is of ample strength for working with steam supplied at 80 lbs. pressure, and of developing 80 indicated horse-power at 70 revolutions per minute, with a cut-off at $\frac{3}{8}$ stroke, and a mean pressure of 58 lbs. in the cylinder. When supplied with dry steam, the average consumption of feed water in the form of steam is 25 lbs. an hour per indicated horse-power.

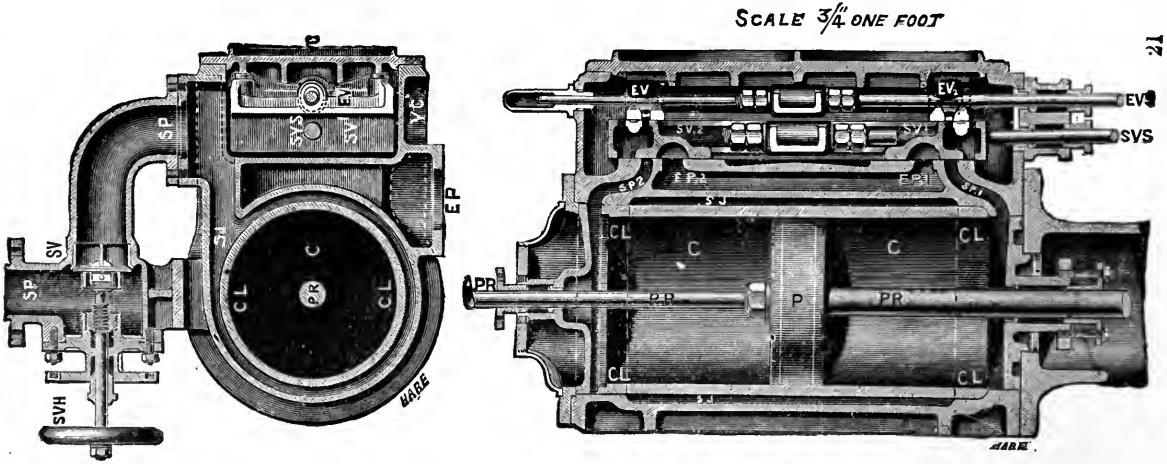

CROSS SECTION. LONGITUDINAL SECTION.

Cylinder and Slide Valves.—The cylinder, C, is of cold blast iron, with a steam jacket, S J. The working cylinder barrel or cylinder liner, C L, is of special hardness, cast separately, and securely forced into the main casting of the cylinder. This liner is truly bored out to a diameter of 14½ inches, the stroke of the piston, P, being 30 inches. The main slide valves, S V_1, S V_2, as well as the expansion valves, E V_1, E V_2, are all of the same class of iron as the cylinder, in order to insure uniformity of wear. Both the slide valve spindle, S V S, and the expansion valve spindle, E V S, are of steel.

In the cross section, the main steam and exhaust pipes are marked respectively, S P, and E P, while

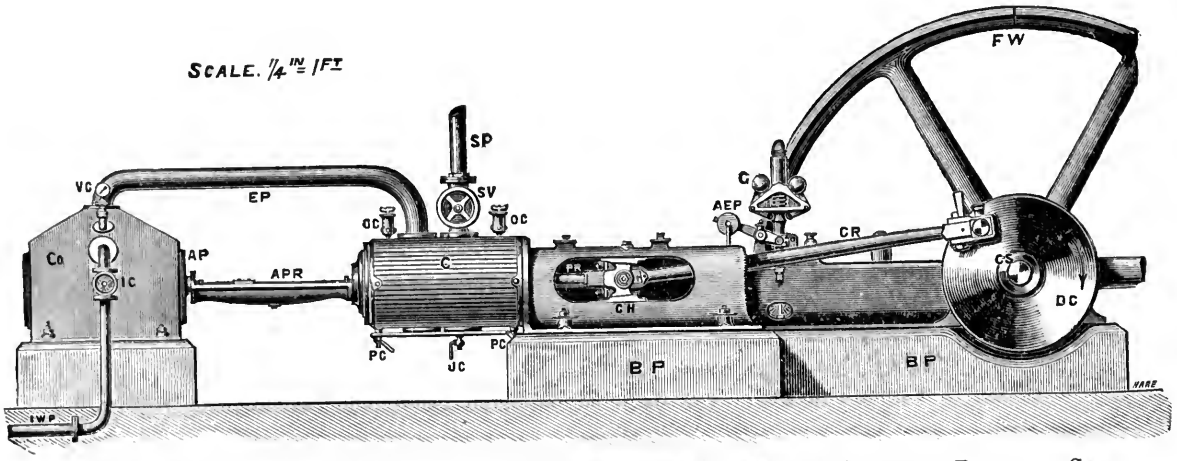

SIDE ELEVATION.—MARSHALL'S HORIZONTAL CONDENSING STEAM ENGINE, WITH AUTOMATIC EXPANSION GEAR.

INDEX TO SIDE ELEVATION AND PLAN.

S P for Steam pipe.	C for Cylinder.	Co for Condenser.
S V ,, Stop valve.	J C ,, ,, jacket cocks.	I C ,, Injection cock.
V C ,, Valve casing.	P C ,, ,, pet cocks.	I W P ,, ,, water pipe.
O C ,, ,, ,, oil cups.	E P ,, ,, exhaust pipe	D P ,, Discharge pipe
E V S ,, Expansion valve spindle.	A P ,, Air pump.	V G ,, Vacuum gauge.
V S ,, (Main) valve spindle.	A P R ,, ,, ,, rod.	

INDEX TO SIDE ELEVATION AND PLAN—*Continued.*

B P	for Bed plate.	E	for Eccentric for slide valve.
P R	,, Piston-rod.	E E	,, Expansion eccentric.
C H	,, ,, ,, Crosshead.	A E P	,, Automatic expansion gear pulley.
O C	,, Oil cup for ,,	G	,, Governor.
C R	,, Connecting-rod.	G B	,, Governor belts.
D C	,, Disk crank.	G P	,, Governor pulleys.
C S	,, Crank shaft.	F P E	,, Feed pump eccentric.
F W	,, Fly-wheel.	F P	,, Feed pump.
P B	,, Plummer block.		

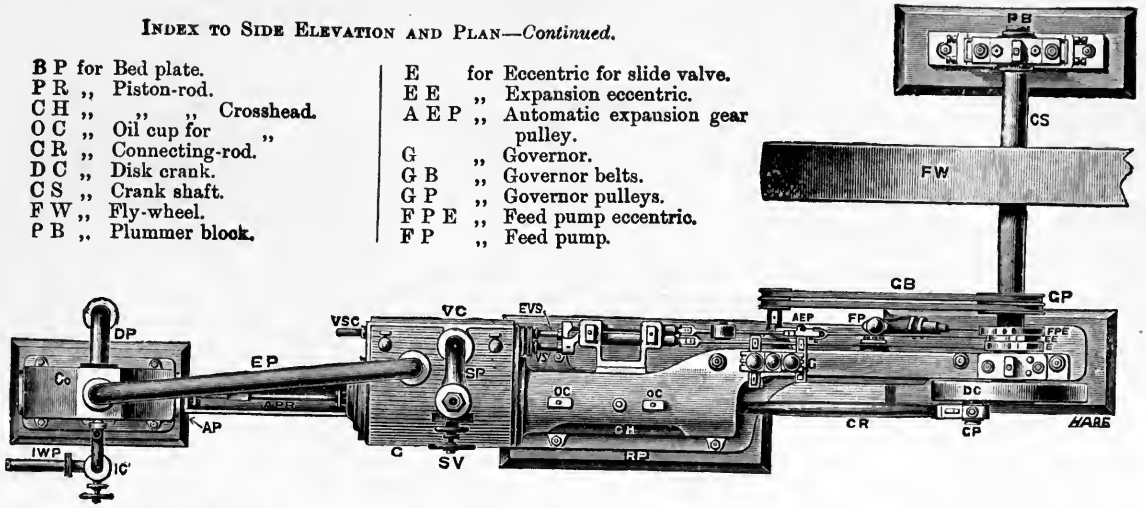

PLAN.—MARSHALL'S HORIZONTAL CONDENSING STEAM ENGINE WITH AUTOMATIC EXPANSION GEAR.

in the longitudinal section, the two steam and two exhaust ports close to the main slide valves, are marked respectively, S P_1, S P_2, and E P_1, E P_2.

Automatic lubricators or oil cups, O O (see general elevation and plan), are fixed into the valve casing, V C, so as to thoroughly lubricate the working parts of the slide valves, and the oil being carried forward with the steam, the piston is thereby also lubricated. An efficient drain cock, J C, for draining the steam jacket, and the valve chest as well as drain or pet cocks, P C, for the cylinder barrel are provided. The cylinder is lagged with teak, held in position by brass screws.

Stop-Valve Chest.—The steam stop-valve chest containing the stop valve, S V, which admits steam from the boiler to the slide valve casing, V C, and steam jacket, S J, is shown in section in the cross section of the cylinder. It is bolted to the valve casing in a convenient position for draining the main steam pipe, S P. The stop valve is a wing valve with a suitable seat, both of gun-metal, and is fitted with a brass spindle and screw, kept steam tight by a stuffing-box with brass gland and studs. On the outer end of the spindle is fixed the stop valve handle or wheel, S V H, whereby the attendant can cut off or admit more or less steam at pleasure from the engine.

Piston.—The piston, P, is made of cast-iron, fitted with L, shaped cast-iron rings, and steel internal spring to compensate for wear.

Piston-Rod.—The piston-rod, P R, and air-pump rod, A P R, are of steel, the former being $2\frac{1}{4}$ inches diameter. They are fixed to the piston by a simple cone and nut.

Crosshead.—The crosshead, C H, is of the best malleable iron, finished bright, and has large adjustable bearing surfaces to compensate for wear. It is firmly fixed to the piston-rod, and is provided with a steel gudgeon for attaching it to the connecting-rod. The crosshead guides are of the circular bored type.

Connecting-Rod. — The connecting-rod is of wrought-iron turned and polished. It is fitted with adjustable brasses at both ends as shown.

Crank Shaft.—The crank shaft is of steel, $5\frac{1}{2}$ inches diameter at the bearings. A polished cast-iron disk properly counter-weighted and fitted with a steel crank pin, is forced on to one end of the crank shaft by hydraulic pressure. The crank shaft is supported by two extra long gun-metal bearings, the crank bearing being sustained directly by the engine bed plate, B P, while the outer one is fitted into a plummer block, P B, placed on a separate foundation outside the fly-wheel. Both bearings are made adjustable to follow up the wear.

Fly-wheel.—The fly-wheel is of cast iron, 11 feet in diameter, and 14 inches wide on the face, with arms of strength proportionate to the weight of the rim and the stresses brought to bear on it while working. It is usually turned with the necessary curvature on the periphery so as to receive a driving belt. The boss is bored out and key-wayed to suit the crank shaft. The engine is usually adjusted so that the top part of the fly-wheel revolves from the cylinder unless otherwise specified for.

Governor and Automatic Expansion Gear.—This arrangement consists of (see first the general views in this lecture) the

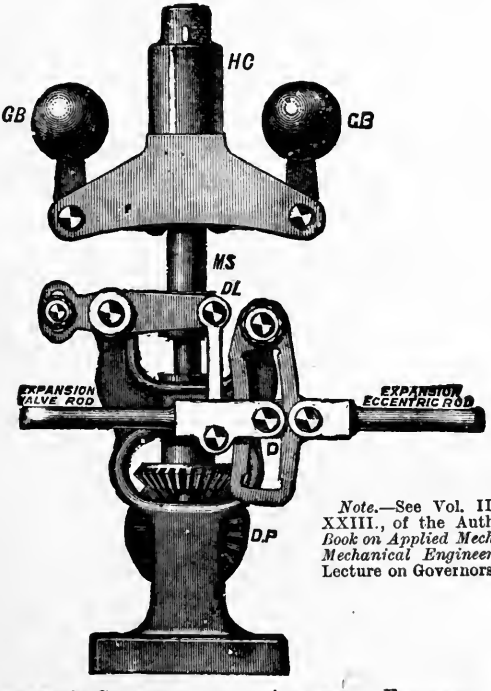

Note.—See Vol. II., Lecture XXIII., of the Author's *Text-Book on Applied Mechanics and Mechanical Engineering* for a Lecture on Governors.

HARTNELL'S GOVERNOR, WITH AUTOMATIC EXPANSION GEAR.

governor, G, driven from two governor pulleys, G P, keyed to the crank shaft, with two belts from them, G B, to the two automatic expansion gear pulleys, A E P, which are keyed to the same spindle as the driving pinion, D P (see the accompanying figure). This pinion, D P, gears with another one

keyed to a vertical spindle, on the other end of which is an arrangement for supporting the two governor balls, G B, G B, fixed to bell crank levers, the whole being rotated along with the vertical spindle. The inner ends of the two bell crank levers, bear on a strong spiral spring, contained in or above the upper extension of the metal tube or sleeve, M S. On the lower end of this metal sleeve is fixed a double collar freely engaged by a forked lever, suspended from which is a drag link, D L, whose lower end is attached to the expansion valve rod. The end of the expansion valve rod engages a die-block, D, which may be pulled up or pushed down throughout the length of the curved link, L, to the centre of which is attached the expansion eccentric rod, whose other end is strapped to the expansion eccentric, E E, keyed in position on the crank shaft.

Consequently, whenever the speed of the engine *exceeds* the normal speed for which it has been set to run at, the two governor balls fly outwards by the extra centrifugal or tangential force, compressing the spiral spring, lifting the metal sleeve, M S, drag link, D L, and expansion valve rod with the die-block, D, towards the upper end of the curved link, L, thus diminishing the travel of the expansion valve, and cutting off the steam earlier from the cylinder; which reduces the power and speed of the engine again to the normal. When the speed of the engine *falls below* the normal, the reverse action takes place, for then the tension of the spiral spring overcomes the compressive pressure of the bell crank levers, and presses down the metal sleeve, drag link, and expansion valve rod with die-block, towards the lower end of the curved link, thus increasing the travel of the expansion valve, and cutting off the steam later from the cylinder; which increases the power and speed of the engine again to the normal. In this way, only sufficient steam is admitted to the cylinder to develop the power required for the load in circuit, and to maintain an approximately uniform speed of from 2 to 5 per cent. above or below the normal speed, under considerable and frequent variations of load; and further, steam is economised by doing so, while the ordinary but less precise acting throttle valve arrangement is dispensed with. All the working parts of this gear are case-hardened and the pins are of steel.

Feed Pump.—The feed force pump, F P, consists of a cast-iron barrel, truly bored out to a diameter to suit a hollow plunger, 3 inches in outside diameter, with a stroke of $3\frac{1}{8}$ inches. It is supplied with the necessary stuffing box, brass-bushed gland and studs, suction and delivery valves with seats, all of gun-

metal (respectively connected by pipes to the condenser hot well and to the boiler as required), and a large cast-iron air vessel. The pump is worked by an eccentric, F P E, keyed to the crank shaft along side of the expansion eccentric.

Condenser and Air Pump.—The condenser, Co, consists of a strong cast-iron box of ample size, bolted to and resting upon a cast-iron sole placed behind the steam cylinder. The cast-iron exhaust pipe, E P, joins the exhaust port of the cylinder, and the top of the condenser at its centre. Immediately underneath the latter end of the exhaust pipe, and inside the condenser, is fixed a perforated pipe or rose, leading from the injection cock, I C, and injection water pipe, I W P, which is $2\frac{1}{4}$ inches internal diameter. An ordinary horizontal double-acting air pump with brass barrel $4\frac{3}{8}$ inches internal diameter is fixed in the centre of the condenser. This pump which has the full stroke of engine, is fitted with a brass plunger and air-pump rod, A P R, $1\frac{1}{4}$ inches diameter, worked direct from the back end extension of the piston-rod as shown. India-rubber suction and delivery valves with brass seating are fixed at each end of the air pump, with a discharge pipe $4\frac{1}{2}$ inches diameter leading from the delivery valves to the hot well. A vacuum gauge, V G, is fitted to the condenser on the same side as the injection cock.

The following table gives the general dimensions, speeds, and horse-powers of such engines:—

Dimensions of Engine.				Revolutions per Minute.	Power.				
Cylinder.		Fly Wheel.			Nominal Horse-Power.	Indicated Horse-Power.			
						Most economical Load.		Maximum Load.	
Diam.	Stroke.	Diam.				Boiler Pressure 60 lbs.	Boiler Pressure 80 lbs.	Boiler Pressure 60 lbs.	Boiler Pressure 80 lbs.
In.	In.	Ft.	In.						
11	22	7	2	96	12	30	36	42	48
12	24	7	9	88	14	35	42	49	56
13	27	9	0	78	16	40	48	56	64
$14\frac{1}{2}$	30	11	0	70	20	50	60	70	80
16	33	12	0	65	25	62	75	87	100
$17\frac{1}{2}$	36	13	0	60	30	75	90	105	120
19	36	13	0	60	35	87	105	122	140

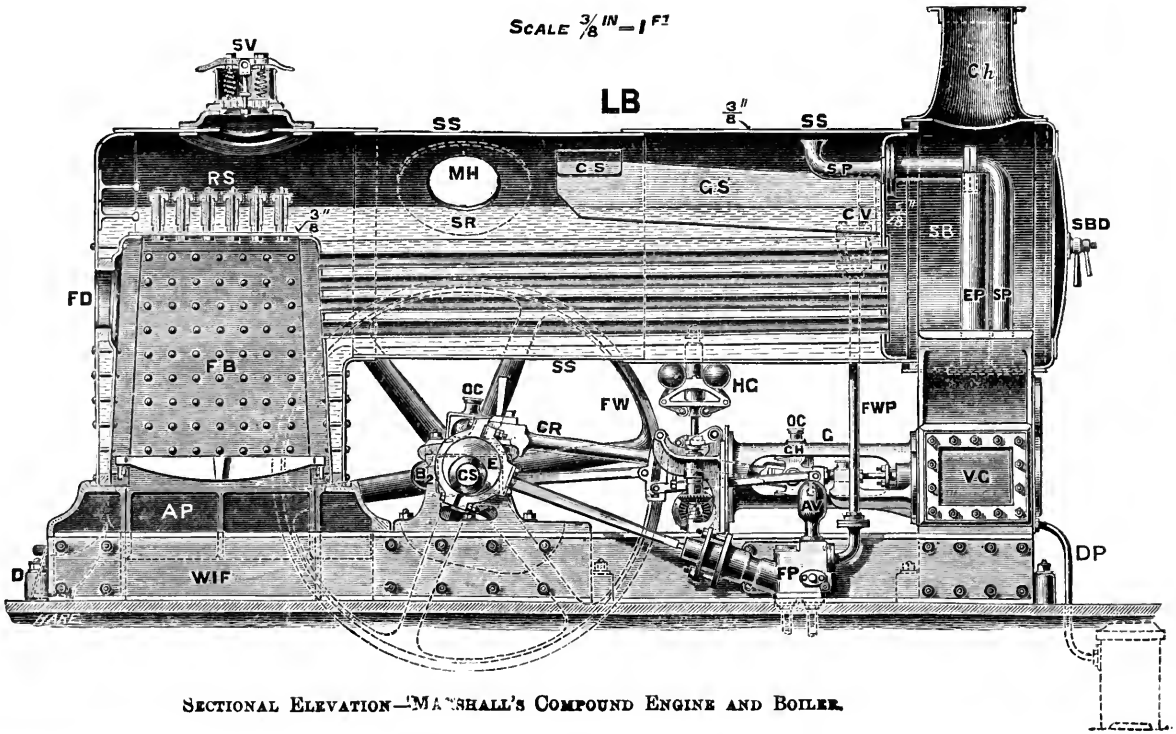

SECTIONAL ELEVATION—MARSHALL'S COMPOUND ENGINE AND BOILER.

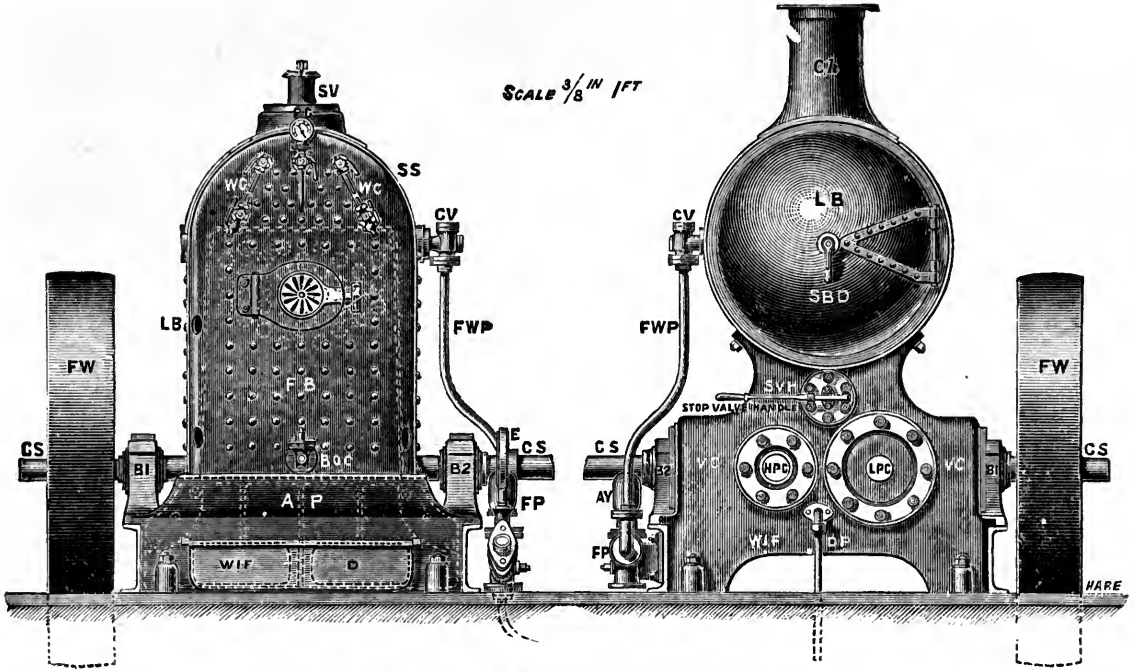

END VIEWS.—MARSHALL'S COMPOUND ENGINE AND BOILER.

Compound Non-Condensing Engine and Boiler.—This type of combined engine and boiler is very complete and compact. It is, therefore, used extensively for driving works and electric light machinery, where want of space or other circumstances prevent the use of a separate engine and boiler. Steam can be raised in this locomotive type of boiler in a very short time, and, owing to the large steam space and heating surface, it keeps steam amply supplied when the engine is working at full power throughout a long and continuous run. The following descriptive specification is for an engine and boiler developing under ordinary circumstances about 50 indicated horse-power, by Messrs. Marshall, Sons & Co., of Gainsborough.

General Construction.—The engine is of an improved construction, mounted on a wrought-iron framing, W I F, underneath a Locomotive Multitubular Boiler, L B, of large capacity, having a steel shell, S S, and a fire-box, F B, of bowling iron. The smoke-box, S B, is bolted to the top flanges of the high- and the low-pressure cylinders, H P C and L P C. The fire-box end rests on a neat ash-pan, A P, fitted with a door, D, for regulating the draught. The cylinders are steam jacketed, and the whole engine is of extra strength throughout to withstand a continuous working steam pressure of 140 lbs. to the square inch, developing 48 indicated horse-power, at 155 revolutions per minute.

Cylinders.—The cylinders are of cold blast iron, with the working barrels of special hardness, cast separately, and tightly forced into the main casting of the steam jacketed cylinders. The cylinders are covered with hair felt cased over with sheet iron. The high-pressure cylinder, H P C, is 8 inches diameter, and the low-pressure cylinder, L P C, is $12\frac{3}{4}$ inches diameter, each with a stroke of 14 inches. The slide valves are of the same class of iron as the cylinder to insure uniformity of wear. The steam chest and jackets are arranged so as to be effectually drained in a similar manner to that shown and described in the last style of engine, the condensed steam being led away by the drain pipe, D P. Steam is admitted to the valve casing, V C, from the boiler by the steam pipe, S P, on opening the stop valve handle, S V H, and the steam is emitted by the exhaust pipe, E P, up the chimney, Ch.

Pistons, Piston-Rods, and Crossheads are of precisely the same type as described in the last style of engine.

Guides.—The guides, G, are of the circular bored type, bolted to the cylinders at one end, and to the wrought-iron bridge plate at the other end. It is fitted with the necessary oil cup, O C.

Connecting-Rods.—The connecting-rods, C R, are of the best scrap iron, turned and polished, and fitted with large adjustable bearings at each end.

Crank Shaft.—The crank shaft, C S, is made of steel in one piece, without weld, and of sufficient length to take on the fly-wheel, F W, on either end as may be required. It is carried on long gun-metal bearings, B 1, B 2, firmly bolted to the wrought-iron framing, W I F. These bearings are made adjustable horizontally, to follow up the wear.

Fly-wheel.—The fly-wheel, F W, is 5 ft. 6 in. diameter, 9½ in. wide on face. It is constructed exactly in the same way as in the last style of engine.

Governor and Automatic Expansion Gear are applied precisely as in the last style of engine, but to the high-pressure cylinder engine only. It is marked, H G, for Hartnell's Governor.

Feed Pump.—A continuous action force pump, F P, with an air vessel, A V, and worked by an eccentric, E, keyed to the crank shaft is bolted to the side of the engine frame. This pump plunger, suction, delivery valves and taps are all of gun-metal, as well as the check valve, C V, fixed to the side of the boiler, and connected to the pump by the copper feed water pipe, F W P.

Boiler.—The boiler, L B, is of the locomotive multitubular type, lagged and cased over with sheet iron the whole length. It is of ample capacity for generating and maintaining a continuous supply of steam for the engine when developing full power. The internal fire-box is of suitable dimensions for burning either coal or wood as fuel, and strongly stayed at the ends and sides by screwed stays, and at the top by deep roofing stays, R S. All the boiler plates are planed on their edges, and riveted together by hydraulic machinery. The longitudinal seams are double riveted, and the boiler throughout is of sufficient strength to withstand a continuous working pressure of 140 lbs. to the square inch. Long gusset stays, G S, are riveted between the smoke-box end and the main steel shell, S S. There are 36 high pressure lap-welded iron boiler tubes, 2½ inches external diameter, extending between the fire-box, F B, and the wrought-iron smoke-box, S B. This smoke-box is fitted with a suitable smoke-box door, S B D, furnished with a strap, hinges and fasteners. The firing door, F D, furnace bars, and manhole, M H, are fitted with external strengthening rings, S R. Two spring loaded safety valves, S V, of ample capacity, water-gauges, W G, W G, with gun-metal fittings, two gauge cocks, steam pressure Bourdon gauge, P C, gun-metal blow-off cock, B O C, are provided, as well as a fusible plug in the crown of the fire-box, and a straight chimney, Ch, of wrought-iron 8 feet long.

Indicator Diagrams.—The following set of diagrams were taken from engines made in accordance with the foregoing specification and the working drawings from which the previous figures were reduced, where—

Boiler pressure	=	140 lbs. on square inch.
Diameter of H.P. cyl.	=	8 inches.
Cut-off in „	=	$\frac{1}{4}$ stroke.
Clearance „	=	$\frac{1}{12}$ of its volume.
Diameter of L.P. cyl.	=	$12\frac{3}{4}$ inches.
Cut-off in „	=	$\frac{1}{2}$ stroke.
Clearance „	=	$\frac{1}{13}$ of its volume.
Number of revolutions	=	155 per minute.

The back end is the full line diagram, and the front end the dotted line.

FROM HIGH-PRESSURE CYLINDER.

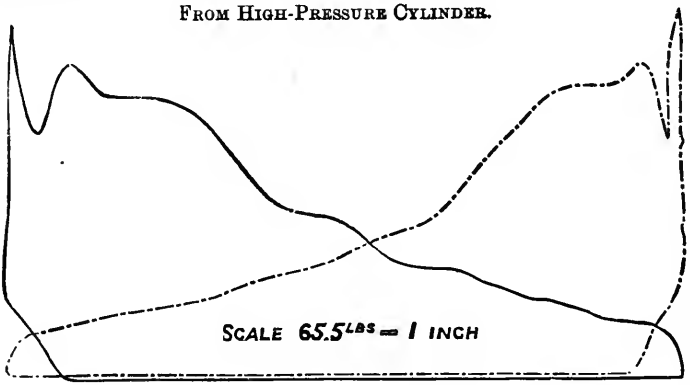

ATMOSPHERIC LINE.

The irregular line on admission is caused by the indicator not being suited to such a high speed as 155 revolutions per minute.

FROM LOW-PRESSURE CYLINDER.

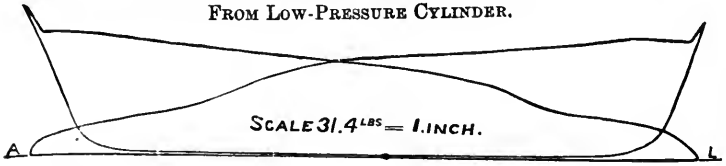

The following table gives the general dimensions of cylinders, fly-wheels, and the speeds of these engines for different horse-powers :—

Nominal Horse-Power.	Cylinders.		Stroke in Inches.	Revolutions per Minute.	Diameter of Fly-wheel.		Indicated Horse-Power given off with Economy.
	High Pressure Diameter in Inches.	Low Pressure. Diameter in Inches.			Ft.	In.	
8	5½	9	12	180	4	0	26
10	6¼	10¼	14	155	5	0	33
12	7	11½	14	155	5	0	40
16	8	12¾	14	155	5	6	52
20	9	14	16	135	6	0	65
25	10	16	18	120	7	0	80
30	11	17½	18	120	7	0	95
40	13	21	24	90	8	0	130

Coupled Compound Horizontal Fixed Condensing Engine, designed and constructed by Messrs. Robey & Co., of Lincoln, and fitted with the Richardson & Rowland Automatic Trip Expansion Gear.

Adapted for, &c.—This type of engine, as illustrated, is specially designed and adapted for driving electric lighting machinery, large factories, mills, &c., where regularity of speed with varying loads, as well as high efficiency in the economy of fuel, is necessary.

Fig. 1 (*A*), shows a front elevation, (*B*), plan, and (*C*), end elevation; Fig. 2, longitudinal and cross-sections through high-pressure cylinder; Fig. 3, enlarged cross-section through high-pressure cylinder at steam admission and exhaust valves; and Fig. 4, an improved form of crosshead and gudgeon pin.

Cylinders and Cut-off.—The cylinders, which are both steam-jacketed, are respectively 18¼″ and 30″ in diameter, with a stroke of 40″. Each cylinder is fitted with the trip valve gear, the cut-off on the high-pressure cylinder being capable of being varied by the governor from *nil* to three-quarters of the stroke, whilst the cut-off on the low-pressure cylinder is variable by hand, and when the engine is running.

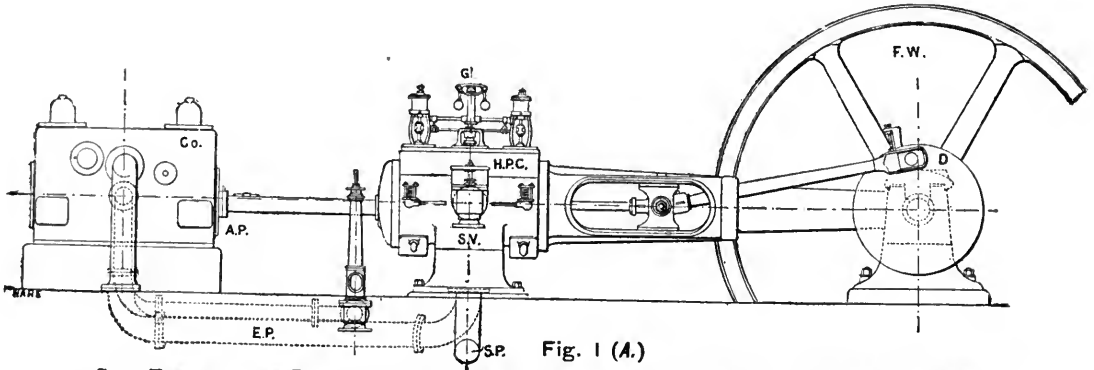

Fig. 1 (*A.*)

SIDE ELEVATION OF ROBEY & Co.'S COUPLED COMPOUND HORIZONTAL CONDENSING ENGINES.

Revolutions.—The engines are speeded to give 63 revolutions per minute at an initial pressure of 100 lbs. steam per square inch, and transmit their power (400 I.H.P.) from a flywheel, **F.W.**, 13′ diameter, 24″ wide, and seven tons in weight.

Steam and Exhaust Valves.—Both high- and low-pressure cylinders, **H.P.C.** and **L.P.C.**, have independent admission valves, **A.V.**, arranged on the top, and exhaust valves, **E.V.**, fitted to the bottom of the cylinders (see Figs. 2 and 3). The former consists of double-beat Cornish equilibrium valves fitted to each end of the cylinders, so as to get the shortest possible steam passage, thus enabling the engine to work at all times with an initial pressure as nearly approaching that of the boiler as possible.

The Admission Valves on the high-pressure cylinder are under the direct influence of the governor.

The Exhaust Valves, **E.V.** (Fig. 3), consist of a special arrangement of Corliss slide valve, which gives a quick opening to the exhaust with a very small travel. Thev are placed underneath the cylinder,

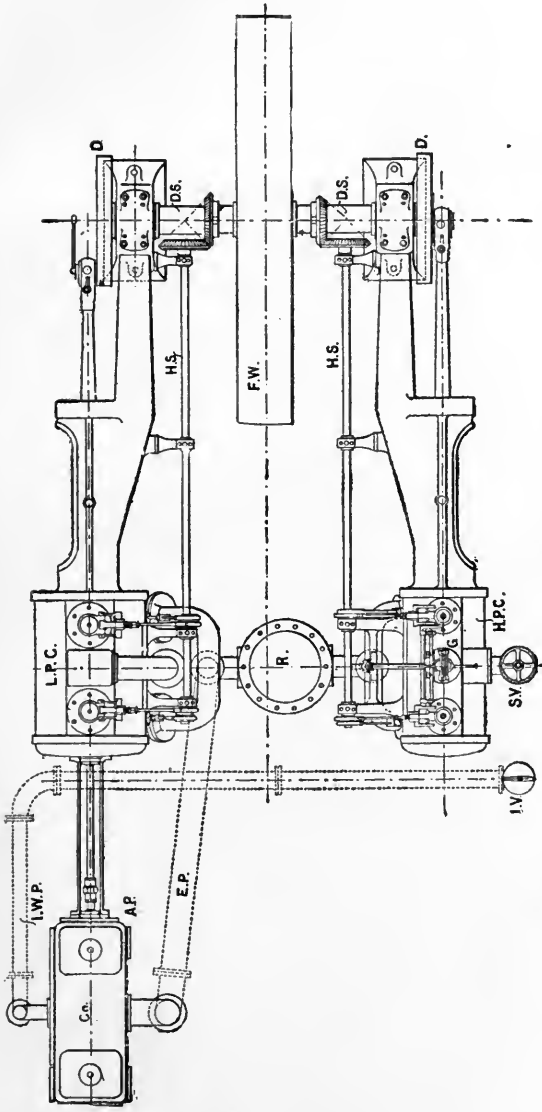

Fig. 1 (*B.*)

PLAN OF ROBEY & CO.'S COUPLED COMPOUND HORIZONTAL CONDENSING ENGINES.

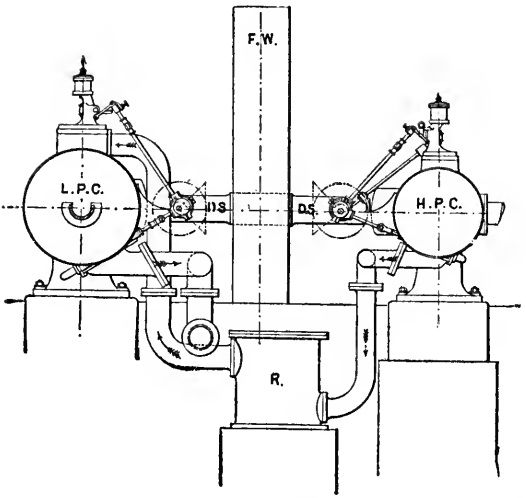

Fig. 1 (*C.*)

in order to efficiently drain the interior, and enable the pistons to work safely with the least possible amount of clearance. They are worked by exhaust eccentrics, **E.E.**, upon the horizontal shaft, **H.S.**, driving the admission valve gear.

Action of Admission Valves and Governor.—Following the action of the steam inlet valves from Figs. 2 and 3, it will be noticed that the admission valves, **A.V.**, are lifted and released by trip levers, **T.L.**, actuated by the admission eccentrics, **A.E.**, driven by the horizontal shaft, **H.S.**, rotating at the same speed as the disc shaft, **D.S.**, and running parallel with the engine-bed. The length of time the trip levers are in contact and consequent duration of the admission of steam into the cylinder is regulated by the governor, **G**, thus automatically varying the grade of expansion to the work being done. The upper portion of the valve spindle, **V.S.**, is attached to an air buffer, **A.B.**, which, assisted by a spiral spring, suddenly closes the valves when relieved from the trip lever.

A very precise action of the valve is obtained by this arrangement, and a very sharp cut-off is consequently insured. To prevent the admission valves, **A.V.**, being forced down too suddenly upon their seats, **S**, the usual air cushion is formed and regulated by valves in the air buffer, **A.B.**, which are so constructed that, while the admission valves close steam-tight, they yet come upon their seats with checked velocity. The

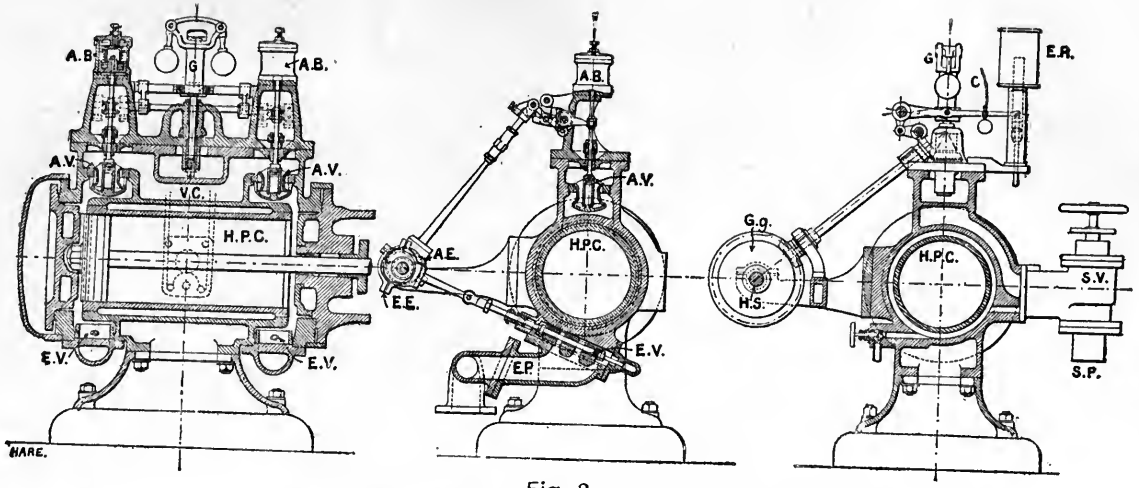

Fig. 2.

SECTIONS THROUGH THE HIGH-PRESSURE CYLINDER OF ROBEY & Co.'S COUPLED COMPOUND HORIZONTAL CONDENSING ENGINES.

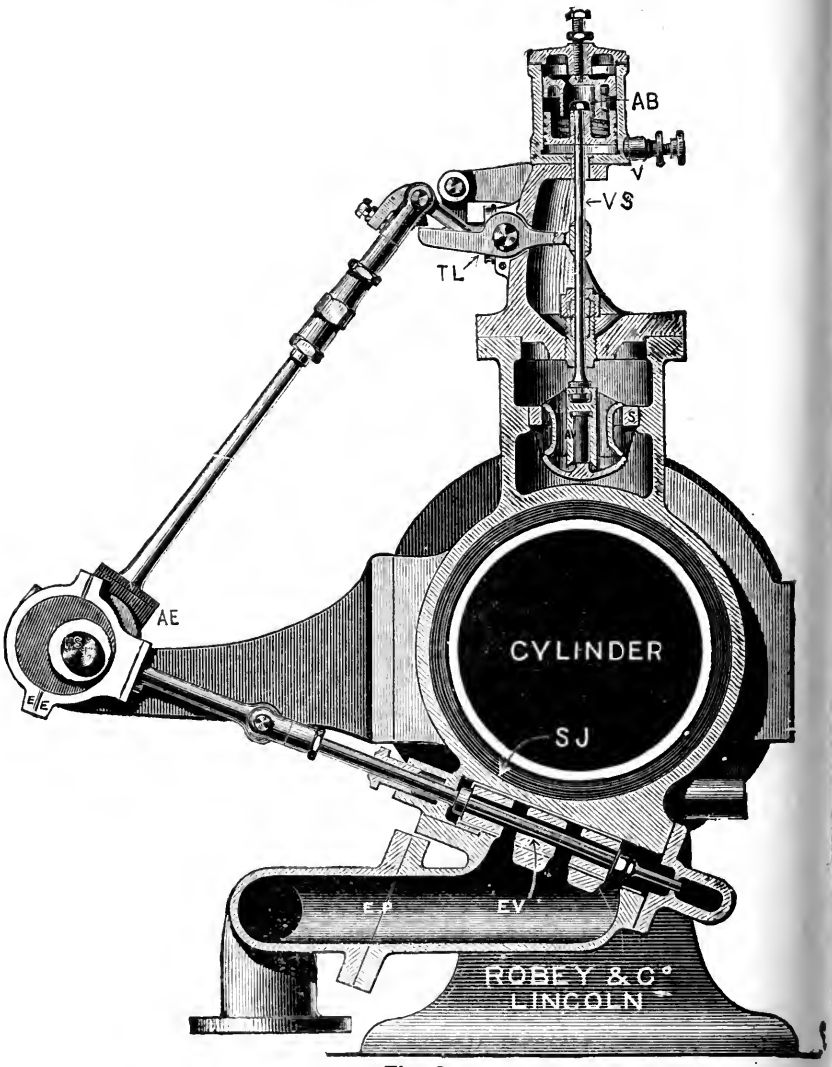

Fig. 3.

RICHARDSON & ROWLAND AUTOMATIC TRIP EXPANSION GEAR.

governor G (Fig. 2), regulating the admission valves, is one of Richardson's patent spring governors, which, being relieved of all working stress, is so constructed as to give a wide range of cut-off with very slight variations in speed. It is driven by gearing, Gg., from the horizontal shaft, H.S. The admission eccentrics, A.E., are so fixed upon the same horizontal shaft, H.S., as to give a constant lead. When used for electric lighting the governor is supplemented by a Richardson-Nevile Patent Electric Regulator, E.R., Fig. 2, which enables the engine to be controlled by the electric current itself, so as to maintain either a constant current or a constant E.M.F. with varying loads.

The valve gear is also arranged so that the engine can be stopped by merely pulling a cord, C, carried to any part of the mill or factory, a provision which is invaluable in case of accident to life or machinery.

Framing.—The engine-frames or bed-plates are of the most solid and substantial character, efficiently resisting the direct thrust and working of the engine, thus securing complete rigidity between the cylinder and main bearings, and efficiently taking up any stresses in the crosshead guides; this design being altogether a great improvement upon the original type of girder engine as first introduced into this country. The bearings, which are extra large, are made in three adjustable parts of Babbit's metal, fitted with suitable lubricators for continuous running.

The steam, in passing from the high-pressure cylinder, H.P.C., to the low-pressure cylinder, L.P.C. (Fig. 1), enters a receiver, R, which is superheated by a current of high-pressure steam from the boiler circulating through a coil of piping placed inside it, thus raising the temperature of the steam previous to its admission into the low-pressure cylinder. The receiver is, in addition, lagged with wood and sheet-iron. The other details need no explanation, as they are similar to those of engines previously explained.

Crosshead: How Made and Fitted.—The crosshead illustrated by Fig. 4 possesses several important features which are worthy of notice. It is made of malleable iron or of cast-steel, and is therefore free from the risk of breaking. The curved surfaces, C.S., which bear on the guides are of hard cast-iron, as this forms the best material for wear. These consist of two plates with projecting pins, shown in dotted lines at P, and are further secured by the screws, S, S, S, S. After these curved surfaces are secured into their places, the whole is turned up true from a mandril fitting into the taper which receives the piston-rod. These bearing plates are designedly left without any means of adjustment by the engine-driver, experience having shown that

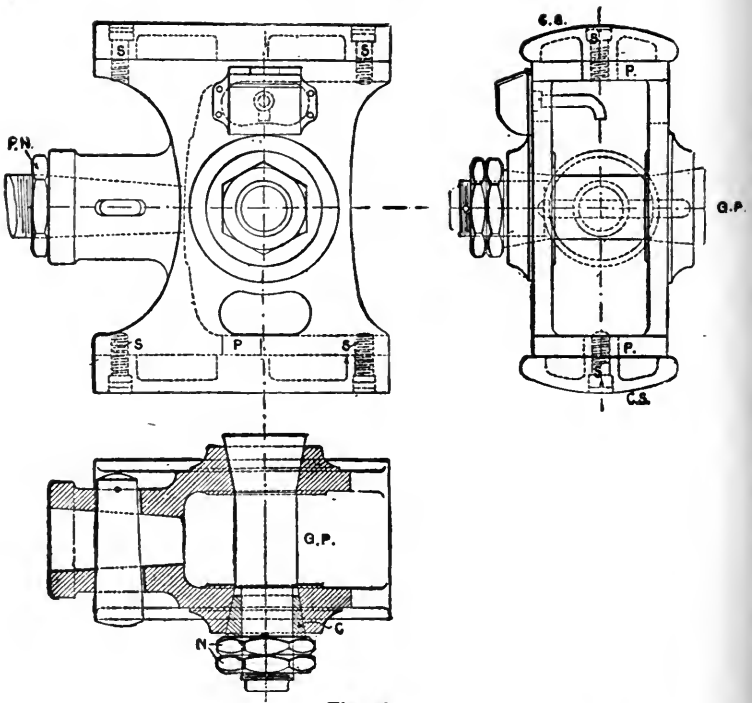

Fig. 4.

ROBEY & CO.'S IMPROVED CROSSHEAD AND GUDGEON PIN.

when such adjustments exist it is more easy to put a crosshead wrong than right. Many crosshead guides have been ruined by screws or wedges being improperly tightened by a careless driver. Should the crosshead shown by Fig. 4 ever get slack, the rubbing surfaces can be packed out by strips of metal, and the exterior again fitted into its place with very little trouble. The surfaces are, however, made so large that there is practically no wear; for guides of this proportion have been known to be in perfect working order at the end of twenty-five years' work. The gudgeon pin, **G.P.**, is a part that has often given trouble, for these pins have to be made to fit so that they can be taken out when required. They are therefore liable to get easily loose. Many methods have been employed to prevent this, but Messrs. Robey & Co. find that shown by Fig. 4 to be the best. The crosshead is bored out taper on its two cheeks, the tapers being in opposite directions. Into one of these the tapered head of the

steel pin, G.P., fits, the other end being turned parallel and is surrounded by a taper steel cotter, C. The cotter is split longitudinally, and is forced by the nuts, N. N., tightly into the coned hole, and at the same time is equally forced to fit tightly upon the pin. It is thus so firmly fixed that it is practically solid with the crosshead when the nuts are screwed up, whilst, when required to be removed, it comes out with the greatest ease. The piston-rod is secured by a cotter into the taper neck of the crosshead in the usual way. For the purpose of removing it (when the cotter is driven out) the piston-rod is provided with a fine thread and a hardened nut, P.N., just behind the crosshead. When this nut is screwed up to the crosshead the rod is drawn without any difficulty. Without such a provision as this, much loss of time and temper is often occasioned.

LECTURE XIX.—QUESTIONS.

1. Explain in general terms the difference between (1) a simple non-condensing engine; (2) a condensing engine; (3) a compound non-condensing engine.

2. Give free-hand sketches (outside elevation and plan) of a horizontal condensing engine, with a complete index of parts, and the uses as well as materials of which each part is composed.

3. Describe with a sketch the construction of a piston, piston-rod, crosshead, and connecting-rod for a horizontal land engine, and show how the several parts are fitted together, and of what materials each part is composed, and why.

4. Sketch a longitudinal section and cross-section through the cylinder of a horizontal condensing engine with expansion valve. Give a complete index of the various parts with the materials of which they are composed. Show how the steam passes into and out of the cylinder, and explain how the piston, piston-rod, and valve spindles are kept steam tight.

5. Describe with sketches and index of parts a compound non-condensing stationary land engine, as usually fitted underneath a locomotive multitubular boiler.

6. What is meant by "Automatic Expansion Gear?" Give the necessary sketches with index of parts and concise explanation to enable a person to understand its complete action, and point out the advantages usually claimed for it over an ordinary governor and throttle valve.

7. Construct scales to suit the indicator diagrams given at p. 328 of this lecture, and divide the diagrams, as well as plot them down to one scale by the method explained and illustrated in the case of H.M.S. *Boadicea*, with the three steam expansion curves. Find also, the mean horse-power developed by each cylinder, and the weight of steam used by the engine per horse-power-hour on the assumption that the steam is "dry saturated steam."

8. Describe a horizontal factory engine which is to work expansively and with condensation. Enumerate the principal parts, and make the sketches necessary for showing the internal construction.

9. Sketch a section through a compound cylinder horizontal factory engine. Show the valves for the distribution of steam, and explain generally the advantages of this form of construction.

LECTURE XX.

CONTENTS.—Short History and General Description of the Corliss Valve Engine—Special Features of the Corliss Cylinders and Positions of the Valves—Different Types of Corliss Valve Gears—Shape and Construction of Steam and Exhaust Valves—The Original Form of Corliss Trip Gear—Simultaneous and Relative Movements of the Wrist-Plate and Valve Levers—General Description of the Connections between and Movements of Eccentric, Wrist-Plate, Valves and Governor—Farcot-Corliss Valve Gear—Reynolds-Corliss Valve Gear—Double Eccentric Gears—Dobson's Horizontal Trip Gear—Cole, Marchent & Morley's Economical Engine, General Description of the Boiler, Superheater and Engine—Notes on the Engine Trials—Distribution Valves—How the Inlet and Exhaust Distribution Valves are Operated—Steam Reheater—Indicator Diagrams—Horizontal Corliss Engine, with the Inglis and Spencer Trip Gear—Hick-Hargreaves' Compensating Steam Dashpot—Compound Engine with Automatic Lubrication—Triple-expansion Engine with Automatic Lubrication—Results with Superheated Steam—Necessary Precautions to be observed with Superheaters and with Highly Superheated Steam—Tests of Willans Engine with Ordinary Steam—Percentage Gain in Steam and in B.T.U. when supplied with Superheated Steam—The Willans Central Valve Engine—Criticism of the Farcot-Corliss Cylinder and Position of Valves—Questions.

Short History and General Description of the Corliss Valve Engine.*—In the year 1849 an American engineer, Mr. G. H. Corliss, patented and constructed this type of engine, which still bears his name. In 1859 the first engine imported into this country from America was set to work at the Stoneywood Paper Works, near Aberdeen,† and the first licencee for the manufacture of Corliss engines in Great Britain was Mr. Robert Douglas, of Kirkcaldy. The firm of Douglas & Grant have, since 1863,

* No mention was made of Corliss engines or valves in either the first edition of Prof. Rankine's *Manual on the Steam Engine*, published by Charles Griffin & Co. in 1859, or in John Bourne's *Treatise* and his *Catechism of the Steam Engine* up to 1865. The first published explanation in this country appears in the *Transactions of the Institution of Engineers and Shipbuilders in Scotland*, vol. vii., 1863-4, by W. Inglis, and again, by the same engineer, in the *Proc. Inst. M.E.* for 1868, in a paper on "The Corliss Expansion Valve-Gear for Stationary Engines." Also, see *The Steam Engine*, by D. K. Clark, vol. iii., Blackie & Son, 1890; *Valves and Valve-Gearing*, by Charles Hurst, 1902, Charles Griffin & Co.

† Whilst writing the above (from the mere recollection of having been taken as a boy to see this engine in 1860), I have received a letter, dated March 10th, 1904, from Mr. A. G. Groundwater, the chief engineer of these works, in which he says—"I have much pleasure in informing you that the late Mr. A. G. Pirie (head partner) brought the first Corliss steam engine from America to this country and started it here in 1859. It was called the 'Yankee,' and it worked continuously for 32 years, driving part of the works until we got larger engines, when it was not thrown away, but connected up for driving our electrical installation, and is now running as sweetly as ever." Forty-four years at work in a place where everything is of the best is a very good testimonial.

made many horizontal mill engines with the latest up-to-date improvements in Corliss valve gear for all parts of the world.

The distinctive feature of this engine lies solely in the distribution and the special method of working its valves. Many of the most eminent British engineers showed a decided reluctance in believing that any such arrangement could surpass the reciprocating flat slide-valve. But nowadays, some of the finest and largest mill engines, where a steady-running, economical steam prime mover is desired, as well as a number of the latest, most powerful and best "Central Station Engines for Electric Light and Tramway Power Installations" are constructed with one or other of the many patented Corliss modifications.

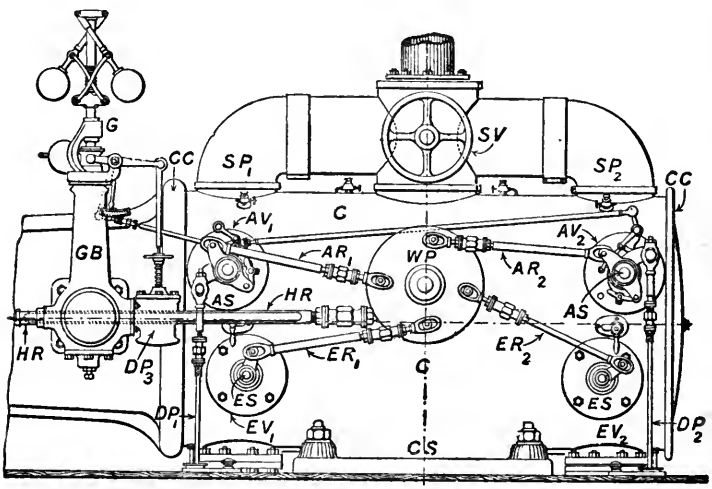

FIG. 1.—OUTSIDE VIEW OF FARCOT-CORLISS VALVE GEAR.

As will be seen from Figs. 1 to 10, with index to parts, the Corliss engine possesses the original and distinctive feature of having four, independent, segment-shaped, arc-faced valves, placed at or near the ends of the steam cylinder, with the peculiar method of rocking these over bored-out steam ports, and of automatically regulating the speed due to altering the point of cut-off by means of the governor.

When the stop valve, S V (Figs. 1, 2), is opened, steam from the boiler fills the steam pipes, $S P_1$, $S P_2$, up to the admission valves, $A V_1$ and $A V_2$. When either of these steam valves uncovers its port, steam enters one end of the cylinder, C, and

forces forward the piston, P. During the return stroke of the piston, this steam leaves the bottom of the same cylinder end by the exhaust valve, EV_1 or EV_2, and its exhaust pipe, EP_1 or EP_2, direct for the condenser if the engine be a simple condensing one, or for the receiver of the next cylinder should it be of the compound type.*

Special Features of Corliss Cylinders and Positions of the Valves.†—From an inspection of Fig. 2, it will be seen:—

1. That the steam admission valves, AV_1 and AV_2, are situated in the cylinder covers, surrounded by the live, fresh steam, whereby they are kept as hot as possible.

2. That a minimum distance exists between the curved working surfaces of the valve faces, AV_1, AV_2, and the inside of

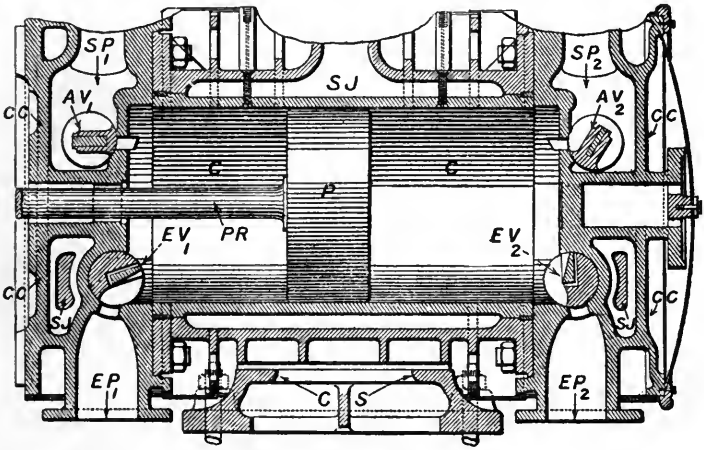

FIG. 2.—LONGITUDINAL VERTICAL SECTION OF CYLINDER IN FIG. 1.

INDEX TO PARTS FOR FIGS. 1 AND 2.

$SP_{1,2}$	for Steam pipes.	CC	for Cylinder covers.
SV	,, Stop valve.	$EV_{1,2}$	,, Exhaust valves.
$AV_{1,2}$	,, Admission valves.	$EP_{1,2}$	,, Exhaust pipes.
C	,, Cylinder.	CS	,, Central sole-plate.
P	,. Piston.	SJ	,, Steam jackets.
PR	,, Piston-rod.		

* The exhaust valves, EV_1 and EV_2, should have been placed so as to clear the piston at the end of its strokes. But this drawing was made direct from the original, in which the designer has forgotten, that if one or other of the motion rods for these valves broke it would be awkward for the valves.

† See also criticism on pp. 368, 369.

the cylinder, C, as represented by the inner thickness of the cylinder covers. Further, that the faces of these valves are kept up to their working surfaces by the pressure of the steam upon the backs of the former, and the way in which they are connected by a rectangular fitted slot to their admission valve spindles, A S (Fig. 1).

3. That to all intents and purposes, the clearance spaces between the ends of the piston and the inner faces of the cylinder cover can be reduced to a minimum, by good design, workmanship and the necessary cushioning of the exhaust steam.

4. That the exhaust valves, $E V_1$ and $E V_2$, are also placed in the cylinder covers, but as far away from the steam valves as possible. The well-known pernicious cooling effects and wasteful accompanying initial condensation, which is met with in ordinary slide valves, due to the colder exhaust passing out by the same port and through the same valve as it entered by, is thus neatly and effectually avoided.

5. In the case of horizontal cylinders, any condensation which may take place therein, can readily drain down to the exhaust ports and be entirely swept out through $E P_1$ or $E P_2$ during each exhaust stroke, from the fact, that the exhaust valves are situated at the lower side and extreme ends of these cylinders.

6. That the complete cylinder barrel and its ends are surrounded with steam jacket spaces, S J, which may be kept always full of live, fresh, hot steam from the boiler, whilst any condensation which takes place in these jackets may be easily drained off into the condenser hot well by special cocks and pipes.

7. That the cylinder as a whole is fixed to a central sole-plate, C S, so that it can expand or contract more or less freely to or from either end without undergoing very severe stresses due to great changes of temperature. Such an arrangement should permit of the free use of superheated steam, if the valves did not "warp" and the working surfaces could be made to withstand its action.

It will thus be seen, that the cylinder and valves of the Corliss engine have been designed upon sound scientific principles, with a view to steam economy. We shall now consider how far the action of the valve-motion gear and the governor support this design in the same direction.

Different Types of Corliss Valve Gears. — These may be classified under three main types :—

1. *Valve Gears without any "trip"* or disengaging mechanism for regulating the point of cut-off by means of a governor. In

this case, all four valves have a positive connection with the eccentric, their travel is constant and the "point of cut-off" is invariable. Any governing for speed and load is done by a governor acting upon an ordinary throttle valve. This kind was never much used.

2. *Single Eccentric Gears* with "trip" motion for the front and back steam valves. In this case, the two steam valves are so rocked by the eccentric's motion, through its connection with the wrist-plate, &c., against the resistance of springs as to uncover their steam port openings as quickly as possible. Their connection with the eccentric is then released by the governor, which automatically determines the "point of cut-off" according to the speed and load. The two exhaust valves are worked in the same way as case 1 (see Figs. 1 to 4), and are always rocked full open whatever may be the point of cut-off in the steam valves or the load on the engine.

3. *Double Eccentric Gears* with "trip" motion. One eccentric works the two steam valves in the same manner as in case 2, whilst another eccentric is devoted to working the two exhaust valves. Here the periods of steam, cut-off, exhaust, and cushioning may be adjusted before starting the engine by setting the valve spindles, driving levers and connecting-rods to the wrist-plate, &c. This type is now the kind most frequently made in this country for both large horizontal and vertical engines, as shown by the illustration (Fig. 9) of the Reynolds-Corliss valve gear on the high-pressure cylinder for one of the 5,000 I.H.P. engines of the Glasgow Tramways at the Pinkston Central Power Station.

Shape and Construction of Steam and Exhaust Valves.*—As will be seen from an inspection of Figs. 2, 3 and 4, both the

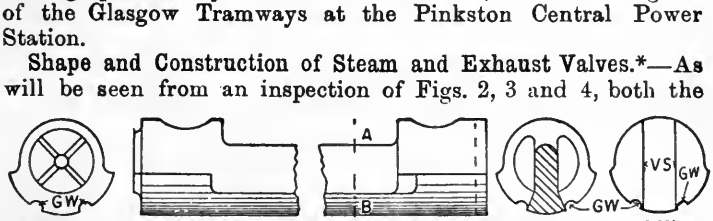

FIG. 3.—CORLISS STEAM VALVE.

steam and the exhaust valves are made of cast iron, turned and shaped as indicated by the end views and cross-sections. It will

* As a rule, illustrations of Corliss valves and their gears omit to show longitudinal and more than one cross-section of the steam and exhaust valves, as well as clear indications of how the trip action works. Students will, however, find detailed drawings in books on Machine Drawing.

be observed, that examples 3 and 4 are made as light as possible consistent with the necessary strength, and that they differ from Fig. 2 in the method of connection to their steel valve spindles. Figs. 3 and 4 show slots along their right-hand ends at V S, to

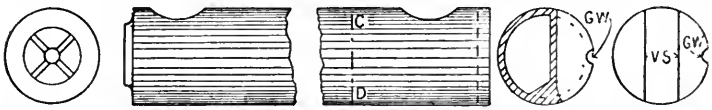

End View. *Outside Longitudinal View.* *Cross-section through C D.* *End View.*

FIG. 4.—CORLISS EXHAUST VALVE.

receive the extended tongue of the valve spindle in the same way that the head of a screw bolt is slotted to receive the point of the screwdriver. They also have half-circle gutter ways, G W, which form self-lubricating channels to carry any oil or condensed steam for the turned end-bearing surfaces.

The Original Form of Corliss Trip Gear.—As the present-day forms of trip gear are somewhat complicated and difficult to understand from a mere inspection and description of drawings, we have selected, as a preliminary diagrammatic view, the original form as devised and applied by Mr. Corliss, and as described by Mr. William Inglis in his paper to The Institution of Mechanical Engineers.

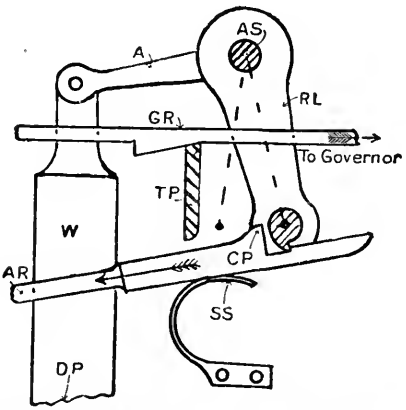

FIG. 5.—THE ORIGINAL FORM OF CORLISS TRIP GEAR.

Here, a weight, W, is attached to the lever, A, on the admission valve spindle, A S, whose rocking lever, R L, is shown in gear with the admission valve rod, A R, from the rocking wrist-plate shown in Figs. 1, 6 and 7. The fixed curved steel spring, S S, keeps the upper end of A R, with its catch part, C P, hard against the catch pin at the outer end of R L, until the upper back curve on C P comes into contact with the trip plate, T P. Should the speed of the engine increase above the normal, then the governor balls are moved outwards by centrifugal force,

thus pulling the governor rod, G R, forward in the direction shown by the arrow (→ to governor). The forcing down of the trip plate, T P, by this inclined wedge-piece on the under side of G R causes the trip plate, T P, to come into earlier contact with the back of C P, and thus releases A R from the eccentric drive sooner in the piston's stroke. This permits the weight, W, to fall quickly at first and to close the steam valve sharply, but its further movement is cushioned or slowed down by means of a dash pot, D P, to which the lower end of W is connected.

In this simple but effective manner, the governor automatically limits the speed of the engine between certain extremes, by tripping or releasing or disengaging the wrist-plate motion rod, and thus permits the steam valve to cut off steam early, if the speed tends to increase, or late, if the speed has been reduced either by an increased load or diminished steam pressure.

Simultaneous and Relative Movements of the Wrist-Plate and Valve Levers. — In Fig. 6, we have shown an educational

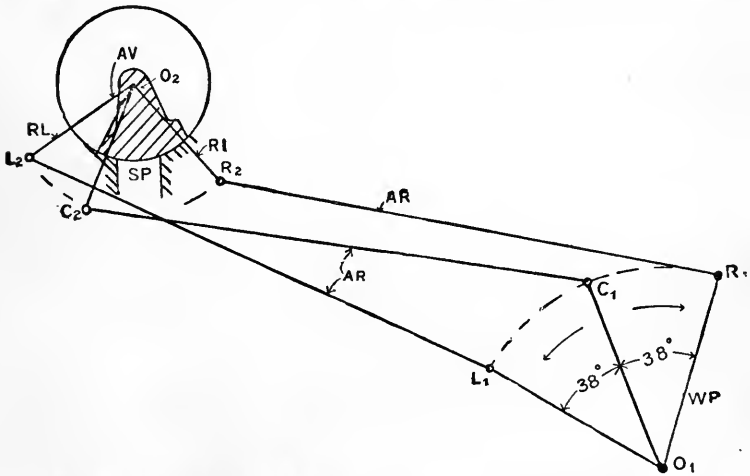

FIG. 6.—MOTIONS OF THE WRIST-PLATE AND CORLISS STEAM VALVE.

diagram, but not to scale, of the angles through which a wrist-plate, W P, and a rocking lever, R L, of an admission valve, A V, move simultaneously, due to their being rigidly connected by an admission rod, A R, in order to illustrate how the wrist-plate modifies the motion of the steam valve, from what it would otherwise be, if the admission lever of the latter was connected direct to the eccentric rod,

Let $O_1 C_1$ represent the centre line of the wrist-plate, W P, when it is in the middle of its rocking motion, as communicated to it by its connection with the engine eccentric; then, the centre line of the valve's rocking lever, R L, will lie along the line, $O_2 C_2$, due to the rigid connection, $C_1 C_2$, of the admission rod, A R. Now, let the wrist-plate be turned to the *right* by the eccentric's motion through the angle, $C_1 O_1 R_1$, of say 38°, then the valve's rocking lever, R L, will have moved during the same time through the *larger* angle, $C_2 O_2 R_2$, of say 63°. This shows that the valve face was moved quicker through its lap + lead + opening of steam port, S P, than it would have been moved, had it been connected directly to the eccentric. Again, the same quicker motion would have taken place whilst shutting the steam port, S P, through the same angle. But, as the wrist-plate moves to the left of the centre line, $O_1 C_1$, of its motion through the same angle of 38° into the position $O_1 L_1$, the valve's rocking lever, R L, only moves in the same time through an angle of 33° into the position $O_2 L_2$. It is thus apparent, that the mere introduction of a wrist-plate and the judicious selection of a good location for the admission-rod pin at C_1 on the wrist-plate, W P, will cause a quick opening of the valve for the admission of steam to the cylinder, whilst the movement of the said valve will be slow when "dwelling" over the rest of its ineffective movement. Of course, the introduction of the trip motion shuts the steam valve still more quickly than if it retained its rigid connection with the wrist-plate throughout its whole to-and-fro travel. The Americans thought, at first, that it was this very quick cut-off due to the trip gear, which caused the extra economy in steam; but now, that idea is exploded, since it is the total area of an indicator diagram which is a measure of the work done for a certain weight of steam supplied per unit of time.

General Description of the Connections Between and Movements of Eccentric, Wrist-Plate, Valves and Governor.—From what has been said, and by a comparison of Figs 1 and 7 with the index attached to the latter, the student will at once understand from the centre-line connections between these several parts how the movements are imparted by the eccentric, E, to the wrist-plate, W P, through the joint at the upper end of the radius arm, R A, and hook rod, H R. Also, how the two short connecting-rods, $A R_1$ and $A R_2$, transmit motion from the wrist-plate, W P, to the rocking levers, R L, of the admission steam valves, $A V_1$, $A V_2$. And, in the same way, how the rods, $E R_1$ and $E R_2$, do the same for the exhaust valves, $E V_1$ and $E V_2$.

Further, it will be seen how the governor, G, is connected by

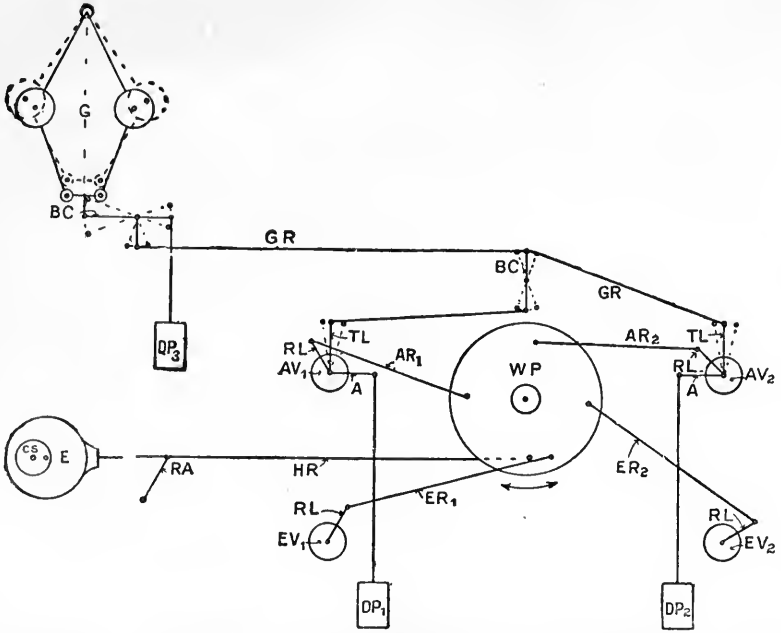

INDEX COMMON TO FIGS. 7 AND 8.

CS	for	Crank shaft.
E	,,	Eccentric.
RA	,,	Radius arm.
HR	,,	Hook rod.
WP	,,	Wrist-plate.
$AR_{1,2}$	,,	Admission valve rods.
$ER_{1,2}$	,,	Exhaust valve rods.
RL	,,	Rocking levers.
$AV_{1,2}$	,,	Admission valves.
$EV_{1,2}$	,,	Exhaust valves.
G	,,	Governor.
BC	,,	Bell cranks.
GR	,,	Governor rod.
TL	,,	Trip levers.
A	,,	Arms.
$DP_{1,2,3}$	,,	Dash pots.

FIG. 7.—DIAGRAMMATIC CENTRE-LINE VIEW OF CONNECTIONS AND MOVEMENTS OF THE CORLISS VALVE GEAR.

bell cranks, B C, and governor rods, G R, and trip levers, T L, to their respective dash pots, D P_1, D P_2, by their arms, A, and to its own dash pot, D P_3.

It will be evident, how the steam valves A V_1 and A V_2, replace the front and back working edges of the ordinary reciprocating slide valve as far as lead, or admission of steam and cut-off to their respective steam ports are concerned. Also, how the exhaust valves E V_1 and E V_2 take the place of the exhaust edges in the ordinary slide valve in determining the points of release, exhaust, and cushioning of the steam in a cylinder.

Farcot-Corliss Valve Gear.—Having mastered the general action of the several elements which come into play in regulating the admission and exhaust steam, the student will now be prepared to tackle the details of this example of levers and cams which serve to actuate the admission valves by special reference to Figs. 1 and 8. The latter figure shows these details by four views, which represent the gear for the right-hand admission valve, A V_2. Here, the rocking lever, R L_2, is mounted loose on the projecting boss of the arm, A. The lower end of R L_2 carries a trip or catch plate, C P, which is constantly drawn towards the admission-valve spindle, A S, by a spring. The precise position of this spring is shown in the hole opposite to the letters C P on the lower left-hand figure or sectional plan through F_2 to centre of A S and then to O. Upon A S is keyed the arm, A, the outer right-hand end of which is connected by the vertical rod to a spring contained in its dash pot, D P_2. It is this spring which closes the admission valve quickly over its steam port, and the dash pot itself cushions or arrests the ending of the downward motion. The left-hand end of the arm, A, carries a lower catch plate, C P, which engages with the upper catch plate, C P, connected to lower end of R L_2. Both catch plates are clearly seen and marked C P on the upper left-hand end view of Fig. 8.

It will now be readily understood how the admission spindle, A S, is suddenly turned and admission valve, A V_2, closed, whenever these two hardened steel catch plates are disengaged from contact with each other. This disengagement is effected by the governor-rod acting through the bell crank, B C, on the two cam links, C L, which are fixed to loose cams, K_1 and K_2, as shown on the right-hand lower section through x . y. Now, looking at the lower left-hand section, it will be seen, that when the projection of cam K_2 comes into contact with the finger F_2, it presses the same outwards from the centre of A S until the upper catch plate, C P, is freed or disengaged from the lower one. This allows

the spring and dash pot, $D P_2$, to act as previously mentioned, and to suddenly cut off steam from the cylinder by closing the

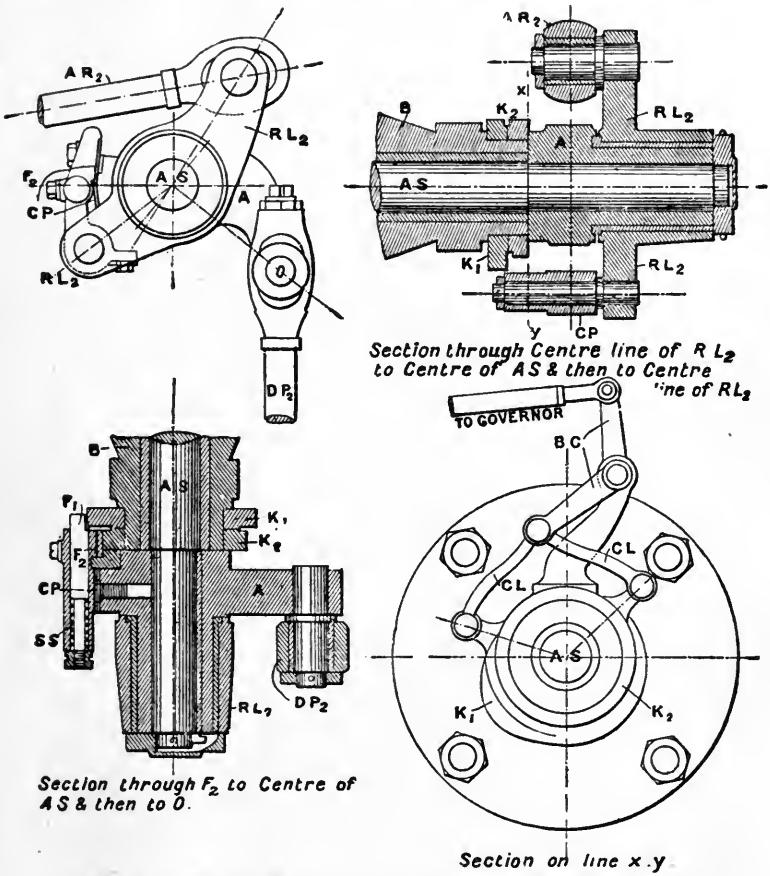

FIG. 8.—DETAILS OF FARCOT-CORLISS SINGLE ECCENTRIC TRIP VALVE GEAR.

INDEX TO PARTS.

A R_2 for Admission valve rod.	B C for Bell crank to governor.
R L_2 ,, Rocking lever.	C L ,, Cam links.
C P ,, Catch plates.	$K_{1, 2}$,, Cams.
A ,, Arm keyed as A S.	$F_{1, 2}$,, Fingers.
A S ,, Admission valve spindle.	S S ,, Spiral spring.
D P_2 ,, Dash pot.	

admission valve. During the whole time of the admission of the steam to the cylinder, the cam K_1 presses inwards the finger F_1 against the resistance of the spiral spring, S S; thus giving a longer or a shorter admission of steam until the governor acts on cam K_2, as just described.

Reynolds-Corliss Valve Gear.—Fig. 9 serves to illustrate another style of single eccentric Corliss valve gear for a horizontal steam

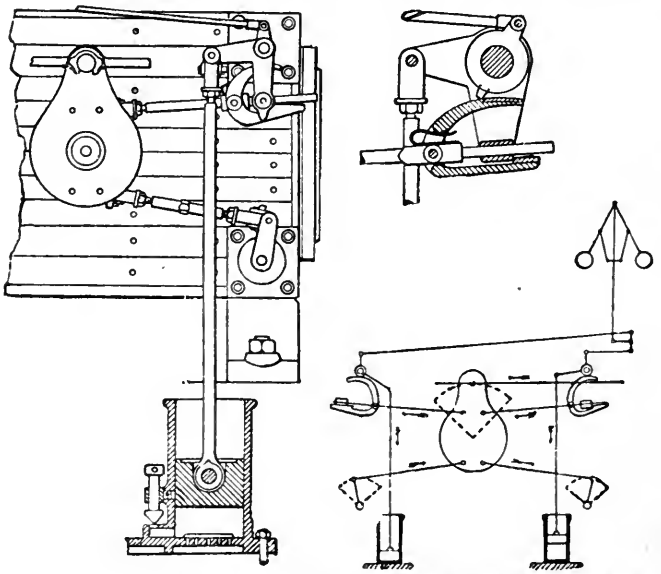

FIG. 9.—ORDINARY SINGLE ECCENTRIC REYNOLDS-CORLISS VALVE GEAR WITH TRIP MOTION FOR A HORIZONTAL ENGINE.

engine. Index letters to the several parts of this and of the next figure have been intentionally omitted, because, after the very fully detailed descriptions which have been given, the student should exercise a little patience and perseverance in tracing out the connections and the action of this gear, without further assistance. He should sketch, letter, and describe the construction and action of this gear as an exercise in his note-book.

Double Eccentric Gears.— Fig. 10 shows an outside photographic view of one form of this double eccentric gear, known

as the American Reynolds-Corliss type. On the left-hand side is seen the vertical motion rod actuated by the one eccentric and connected to one wrist-plate. From the top and the bottom corners of this wrist-plate, rods are connected to the rocking levers of the top and the bottom steam valves. In the same way the right-hand motion rod, wrist-plate, short rods, and rocking levers work the top and bottom exhaust valves. The

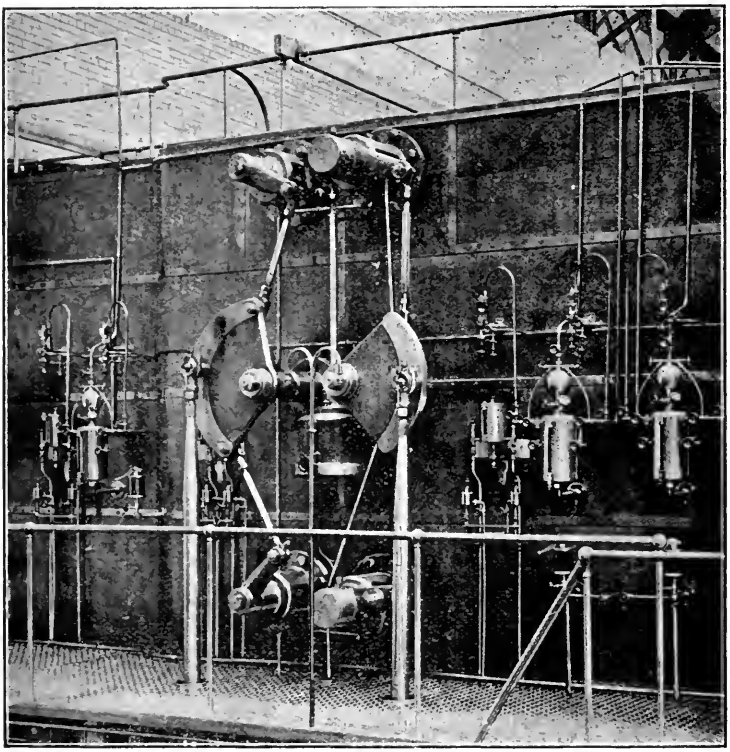

FIG. 10.—REYNOLDS-CORLISS VALVE GEAR FOR ONE CYLINDER OF THE 5,000 H.P. GLASGOW TRAMWAY ENGINES.

dash pot is situated between the lower inner sides of the wrist-plates. The complete oiling cups and pipes for the forced lubrication are also plainly seen, and this special arrangement will be again referred to in this Lecture.

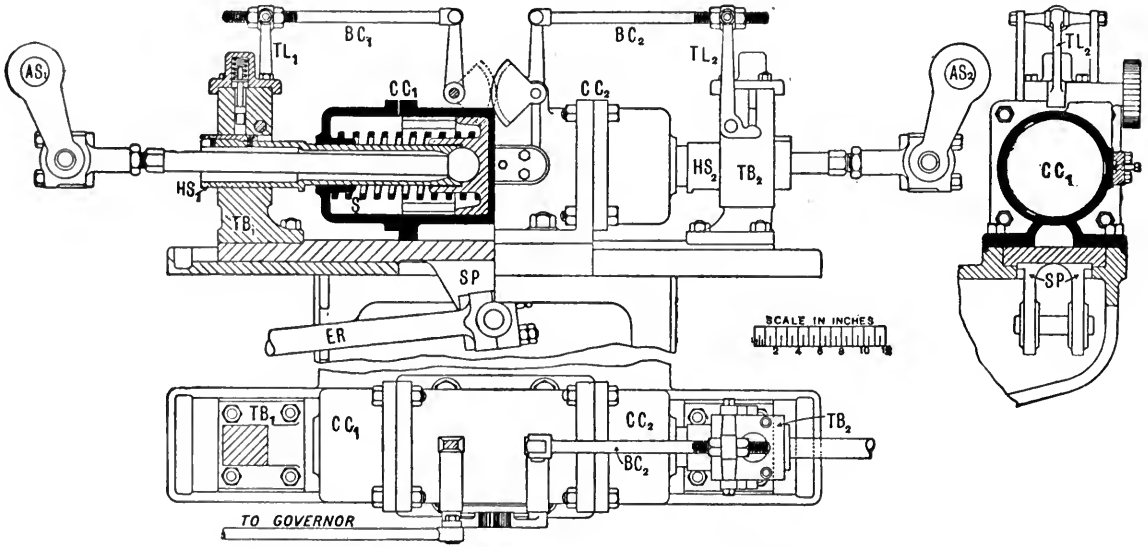

THREE VIEWS OF DOBSON'S TRIP GEAR FOR A HORIZONTAL CORLISS ENGINE.

Dobson's Horizontal Trip Gear.—The sliding piece S P is carried by a bracket which is fixed to the side of the steam engine cylinder. This sliding piece receives its motion from an eccentric and eccentric-rod E R. At each end of the sliding piece S P is fixed the trip boxes $T B_1$, $T B_2$, tripping pieces and trip levers $T L_1$, $T L_2$. These trip levers are connected to each other through bell cranks $B C_1$, $B C_2$ with their toothed sectors, and to the governor by a rod, as shown in the accompanying plan view. At certain points in the stroke of the sliding piece S P, the tripping pieces engage with steel catches, which are secured to the hollow spindles $H S_1$, $H S_2$. By the engagement of these catches, the hollow spindle together with the dashpot piston (which is secured to it) are pulled against the resistance of the dashpot spiral spring S in the compression cylinders $C C_1$ and $C C_2$. The upper ends of the tripping levers $T L_1$, $T L_2$ are practically stationary, so that the effect of sliding S P to and fro, is to cause the upper ends of these levers to move to and fro from their fulcra or centres, thus raising the tripping pieces and causing liberation. The tripping pieces are held to their work by means of light spiral springs in the trip boxes $T B_1$, $T B_2$, and they are always pressed down on the trip levers $T L_1$, $T L_2$. The rods connecting the dashpot or compression-cylinder pistons to the admission-valve spindles $A S_1$, $A S_2$ of the main steam cylinder are made of rectangular section at the middle of their lengths, to enable their outer ends to clear and follow the arc described by the admission-valve spindle pin.

COLE, MARCHENT & MORLEY'S ECONOMICAL ENGINE USING HIGH-PRESSURE SUPERHEATED STEAM WITH DOBSON'S TRIP GEAR.

General Description of the Boiler, Superheater, and Engine.—Some of the best results from highly-superheated steam were obtained from Mr. Michael Longridge, M.Inst.C.E., in his tests of a compound engine made by Cole, Marchent & Morley, Limited, as described in *The Engineer* of June 2nd, 1905. I am indebted to that paper for the results, and to the makers for the figures, to which I have added a detailed, illustrated description of the new Dobson trip gear for vertical engines using highly-superheated steam, as well as of the previously patented Dobson trip gear for horizontal Corliss steam engines.

Boiler, Superheater, and Reheater.—Steam was supplied by a Lancashire boiler, and superheated in an independently-fired Schmidt superheater of 11½ square feet of fire-grate, containing 1,033 square feet of surface exposed to the gases.

The exhaust from the high-pressure cylinder was dried and superheated in the reheater before entering the low-pressure cylinder.

A valve was provided for regulating the flow of live steam through the reheater, but this valve was left wide open during the trials, so that the steam passed freely through both channels.

Engine.—The engine is of the inverted, vertical, compound, marine type, with unjacketed cylinders of 21 and 36 inches diameter by 3 feet stroke. Each cylinder has four piston valves—viz., one at each end to admit steam, and one at each end for exhaust. The steam valves are opened by eccentrics and closed by springs through a Dobson trip gear. The cut-off on the high-pressure cylinder is controlled by the governor, and on the low-pressure by hand. The exhaust valves are opened and closed by eccentrics.

Admission and Exhaust Valves.—A few words of explanation concerning the valves is necessary. The true Corliss valve rotates through a variable arc in a long bored sleeve, and it is well known that difficulties are incurred in keeping these valves tight, as well as in equalising the wear. Consequently, drop valves are now largely taking the place of the semi-rotary valve. But there is another factor to be considered. The valve is not suitable for those conditions under which the power varies through large ranges, as in electricity generating stations. This arises from the fact, that a Corliss steam valve when open is practically in equilibrium, and under such conditions the dashpot can close it easily. But, when the engine is running very light and the port is only slightly open, this valve is not in equilibrium, and it requires great pressure to shut it. If, then, we design the engine so that the springs or dashpot are strong enough to shut it when the valve is only just open, it becomes too strong when the heavy load comes on and the valve is wide open. An ordinary spring dashpot has just the opposite effect, and several devices have been designed to get over this difficulty, but none have been altogether success-

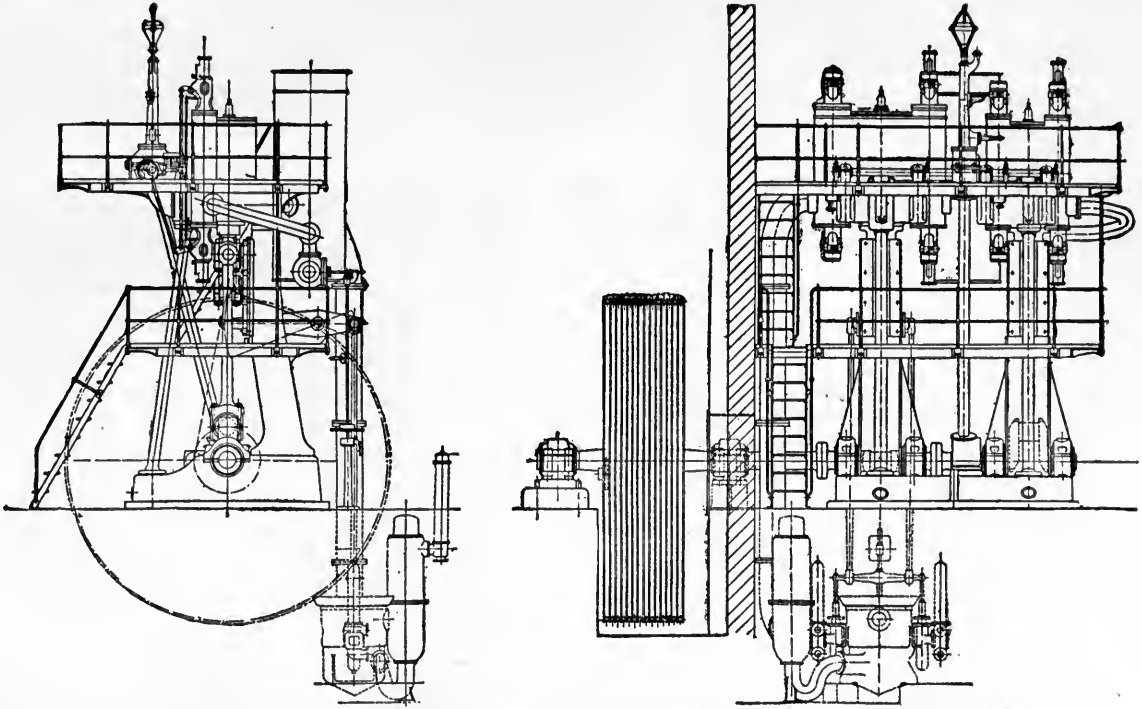

FRONT AND END ELEVATIONS OF A COMPOUND SUPERHEATED STEAM ENGINE.

ful. The Corliss valve does possess this advantage, for it has got lap, and therefore the cut-off can take place at the full speed of the dashpot and the valve can be pulled up in the lap. On the other side, the Cornish drop valve is very light on the gear, and can be easily opened and closed at any load; but it must be cushioned very accurately, as it shuts down on to a dead face, and has to be arrested within a few thousandths of an inch or it will "hammer." Many devices, such as oil dashpots and compound mechanism for closing these valves, have been designed, and the difficulty has only been overcome by complicating the mechanism. The piston drop valve possesses great advantages. It is almost as light to move as the Cornish valve. It is of such design, that the dashpot is right opposite to the valve working on its spindle, so that the springs need not be strong, and the resistance to the movement of the valve is the same at any position of its movement. Further, the piston drop valve has lap, so that the cut-off can take place at the full speed of the valve and cushioning can take place during the lap. The piston valve thus possesses the advantages of the drop valve and of the Corliss valve without their disadvantages. It also lends itself to satisfactory lubrication. At the same time, the makers claim that they can, if necessary, run this engine faster, as far as the valve gear is concerned, than would be safe with either the drop valve or the Corliss valve. There is, however, a limit to this speed, which will in the majority of cases be decided by the piston speed and not by the valve gear.

Air and Circulating Pumps.—Under ordinary working conditions the exhaust from the low-pressure cylinder is discharged into a jet condenser with an Edwards' air pump 22 inches diameter by 14 inches stroke, driven by levers and links from the low-pressure piston-rod crosshead. But, during the trial, it was led into a specially erected surface condenser, in order that the steam consumption might be ascertained by measurement of the air-pump discharge. This condenser had about 1,200 square feet of cooling surface.

The air and circulating pumps are double-acting, direct-driven, and are both 12 inches diameter by 12 inches maximum stroke. The stroke during the trials averaged about 11 inches.

Weight of Discharge from Hotwell.—During the test trial the discharge from the hotwell was led alternately to one or the other of two tanks standing on weighing machines and weighed. The tanks measured about 2 feet 11¾ inches by 4 feet ¼ inch by 2 feet 6¼ inches, and were used alternately, one being filled while the other was being emptied. The weighing machines were made and set in position, as well as tested, by Messrs Avery & Co., of Birmingham.

In all, six trials were made, two at the maximum load which could be put upon the engine, two at about three-quarters, one at rather more than half load, and one at the lightest possible load—viz., when the engine was driving the mill shafting only. It was endeavoured to keep the temperature of the steam about 700° F. at the stop valve.

The results of the trials are tabulated below, as nearly as possible in the form prescribed by the Committee of the Institution of Civil Engineers on "Tabulating the Results of Steam Engine and Boiler Trials"—*Min. Proc.*, vol. cl., p. 221

The index number at the beginning of each line in the table is the number of the corresponding line on the prescribed form. Where the number is missing, the information required to fill in the line was not obtained or did not apply to the particular engine under test.

Notes on the Engine Trials.—*Line* 106.—The temperatures of the steam as it passed through the engine were measured by mercury thermometers placed in pockets filled with oil and screwed into the steam pipes.

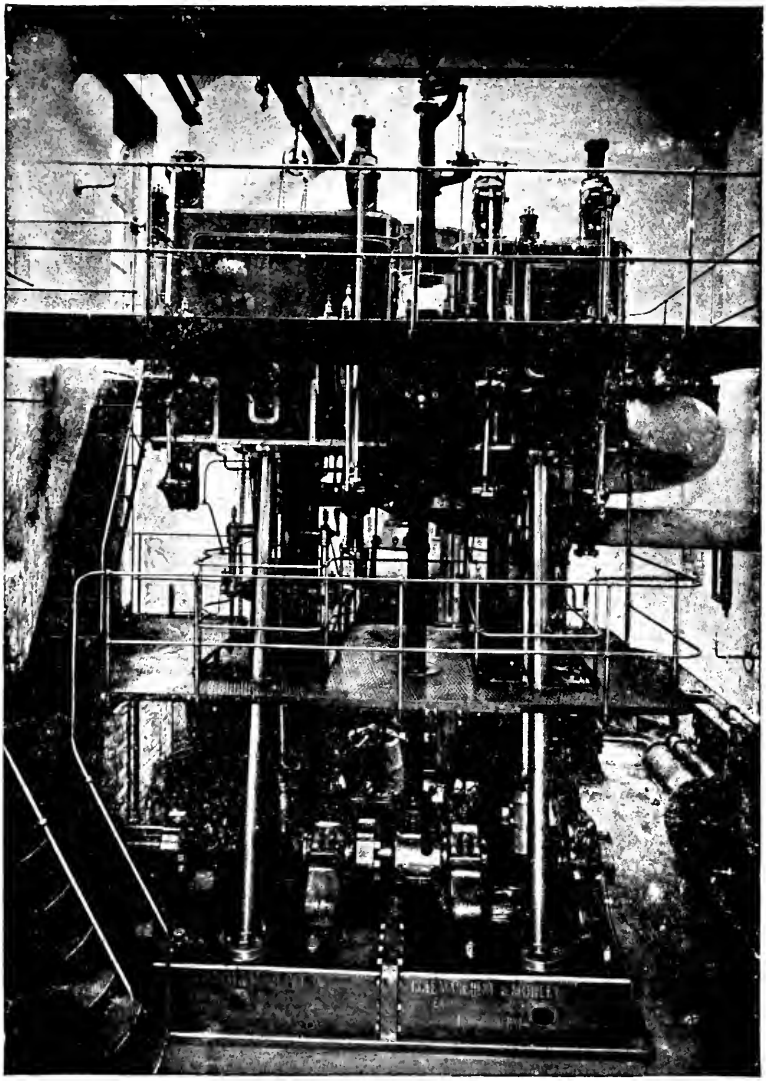

Outside View of a Compound Superheated Steam Engine.

By Cole, Marchent, Mosley & Co.

The two thermometers used for measuring the temperature of the steam entering the receiver and high-pressure cylinder were tested on the completion of the trials at the National Physical Laboratory, and the small corrections found necessary have been applied to the readings.

Lines 112-117.—The mean effective pressures and indicated horse-powers were calculated from indicator diagrams taken at intervals of ten minutes from indicator cocks connected to the cylinder ends by short bends. Four Crosby indicators were used. The springs used were tested cold, with the following results:—

High-pressure cylinder,		1/80—3·4	per cent.	strong.
,,	,,	1/80—3·2	,,	,,
Low-pressure	,,	1/10 { 0·88	,,	,, in compression.
		{ 0·17	,,	weak in tension.
,,	,,	1/10 { 0·48	,,	strong in compression.
		{ 0·25	,,	,, in tension.

The springs were said to be correct when hot, and probably were nearly so. The cords connecting the indicators to the motions were less than 2 feet long. From the diagrams taken at the trials the mean diagrams were constructed. The mean effective pressures calculated from these by the method of ordinates are given in the table.

Line 125.—In calculating the heat supplied to the engine, the specific heat of superheated steam at about 740° temperature and 117 lbs. pressure has been taken at 0·48, in accordance with the diagram plotted by Robert H. Smith, from the experiments of Professor H. Lorenz, and published in *The Engineer* for 6th July, 1904, p. 25.

Line 126.—The thermal efficiencies are obtained by comparing the number 42·41, which is the heat equivalent of the horse-power per minute, with the heat supplied to the engine per minute. The ratio shows what percentage of the heat supplied is converted into work.

Lines 127 *and* 128.—The heat theoretically required by the Institution of Civil Engineers' standards of comparison is the heat required by an ideal engine, described by Rankine, when working between the temperatures given in lines 106*a* and 111*a*. It is the least quantity of heat which an ideal steam engine working on this cycle would require. A comparison of the number 42·41 with this minimum quantity of heat gives the "thermal efficiency" of the ideal engine, and a comparison of the "thermal efficiencies" of the ideal engine with that of the actual engine gives "the efficiency ratio;" that is, the ratio between the heat actually used and the smallest quantity of heat which could be used in an engine without clearance or permeable cylinder walls working between the same temperatures as the actual engine.

Line 130.—The figures on this line are plotted on ordinates to a horse-power base in Fig. 7. They are somewhat irregular. The difference of ·168 lb. between the consumptions in Trials I. and II., and of ·301 lb. between the consumptions in Trials III. and IV., may be partly accounted for by the slight excess of superheat in Trial I. as compared with Trial II., and in Trial IV. as compared with Trial III.; but they are probably due for the most part to error in the indicator diagrams, for it is hardly possible that the water and time measurements could be so far out.

Taking the means of these experiments, it may be said that the steam consumption per indicated horse-power per hour and the heat consumption per indicated horse-power per minute were as under:—

For 471	I.H.P.,	9·187	lbs. and	199·7	B.T.U.
,, 341	,,	8·735	,,	194·9	,,
,, 258	,,	8·682	,,	194·0	,,
,, 145	,,	8·742	,,	194·0	,,

Testing the Engine, and the Method of Tabulating the Results.

General Description and Dimensions.

Type of Engine.—A pair of inverted, vertical, compound, made by Messrs. Cole, Marchent & Morley, Bradford.
Maker's Rating of the Power.—500 indicated horse-power at 100 revolutions per minute, and at 120 lbs. per square inch stop-valve pressure.
Tests made at Various Loads, from 482 to 147 indicated horse-power, by Messrs. M. Longridge, J. Taylor, J. B. Gow, and H. M. Longridge, of the British Engine, Boiler, and Electrical Insurance Company.
Character of Load.—Weaving machinery.
Object of Trials.—Primarily, contract guarantee; secondarily, to ascertain the steam consumption and efficiency of the engines for all powers between the limits full load and no load, except mill shafting.

88 General Description of Engine.—Pair of inverted vertical marine type, cranks at right angles, P leading. Reheating receiver between the cylinders. The cylinders are unjacketed.
89 Type of Valve.—Drop piston valves.
90 How Governed.—The governor controls cut-off in high-pressure cylinder; the cut-off in the low-pressure cylinder can be varied by hand.
91 Method of Measuring Steam Consumption.—Air-pump discharge was weighed in two tanks alternately. No allowance was necessary for leakages at valve spindle or piston-rod glands, as these parts were steam-tight.
92 Particulars of cylinders—

	H.P.	L.P.
Diameter of cylinders,	21 inches,	36·018 inches.
Diameter of piston-rods,	4·5 ,,	4·5 ,,
Stroke of pistons,	36 ,,	36 ,,
93 Volumes swept by pistons per stroke,	7·05 cubic feet,	21·06 cubic feet.
Ratio of cylinders,	1	2·984
94 Clearance volumes, mean of both ends,	0·6145 cubic foot,	1·975 cubic feet.
Clearance per cent.,	8·7	9·4
95 Clearance surfaces per stroke,	15·2 square feet,	36·2 square feet.

98 Receiver volume, including that of pipes connecting it with cylinders and waste space in valve boxes, 28·05 cubic feet.

Particulars of Observations.	Data Deduced from Observations.					
Number of trial,	I.	II.	III.	IV.	V.	VI.
100 Duration of trial, hours,	1·842	1·854	1·961	0·90	0·5277	1·408
101 Atmospheric pressure by aneroid barometer, lbs. per sq. in.,	14·66	14·5	14·4	14·4	14·4	14·4
Admission Steam.						
102 Weight entering high-pressure cylinder per hour, lbs.,	4,379	4,272	3,088	2,240	1,272	2,863
103 Condensed steam drained from reheater per hour, ,,	0	0	0	0	0	0
104 Pressure by gange on boiler side of engine stop valve, lbs. per sq. in.,	117·5	117·5	117·5	114·5	114·5	117
105 Temperature of steam boiler side of engine stop valve, degs. Fah.,	743	738	749	732	726	751
106 Superheat of steam boiler side of engine stop valve, ,,	395	390	401	384	378	403
106*a* Temperature of steam entering high-pressure cylinder, degs. Fah.,	**601**	**590**	**569**	**558**	**550**	**580**
106*b* Superheat of steam entering high-pressure cylinder, ,,	253	242	221	210	202	232
107 Drainage from pipe between cylinders per hour, lbs.,	0	0	0	0	0	0

	Exhaust Steam.						
111	Temperature at exit from engine, ... degs. Fah.,	120	117	104	93	110	97·5
111*a*	Temperature of water leaving hotwell, . . . ,,	102	101	78	64	70	71
111*b*	Vacuum gauge, ... ins. of mercury,	26·4	26·4	27	27·4	26·5	27·4
	Power.						
112	Mean effective pressure in high-pressure cylinder from mean diagram, ... lbs. per sq. in.,	41·4	41·25	32·6	24·25	13·63	31·4
	Corresponding I.H.P. developed in high-pressure cylinder, . .	256·2	255·6	201·8	150·2	84·5	194·6
	Mean effective pressure in low-pressure cylinder from mean diagram, ... lbs. per sq. in.,	12·18	11·12	7·89	5·83	3·33	7·51
	Corresponding I.H.P. developed in low-pressure cylinder, . .	225·1	205·5	145·7	107·8	61·6	138·9
113	Mean pressures referred to low-pressure cylinder from mean diagrams, ... lbs. per sq. in.,	26·06	24·94	18·81	14·38	7·87	18·04
114	Mean area of low-pressure cylinders, ... sq. ins.,	1,010	1,010	1,010	1,010	1,010	1,010
115	Revolutions (by counter), ...	100·6	100·7	100·6	100·7	100·7	100·7
116	Piston speed in low-pressure cylinder per minute, . feet per min.,	603·6	604·2	603·6	604·2	604·2	604·2
117	Indicated horse-power, ...	481·3	461·1	347·5	258	145·5	333·5

Heat Account (from 32° F.) in B.T.U.

		B.T.U.	%	B.T.U.	%	B.T.U.	%	B.T.U.	%	B.T.U.	%	B.T.U.	%
120	Gross heat supply entering the engine per min.,	100,540	100	97,890	100	71,060	100	65,790	100	51,230	100	29,040	100
121	Heat equivalent of I.H.P. per min., ...	20,410	20·3	19,550	19·98	14,734	20·7	14,140	21·5	10,940	21·4	6,170	21·2
123	Heat leaving engine in exhaust steam per min.,												
124	Balance of heat account, errors of observation, losses by radiation, &c., per min., . . .	80,130	79·7	78,340	80·02	56,330	79·3	51,650	78·5	40,290	78·6	22,870	78·8

Deductions (Reckoned from Hotwell Temperature).

125	Heat supplied per minute per I.H.P., ... B.T.U.,	198·25	201·7	197·6	192·1	194·0	194
125*a*	Work actually obtained for 1 lb. of steam, . . . foot-lbs.,	217,700	213,700	222,800	230,600	228,000	226,500
126	Thermal efficiency, ... per cent.,	21·39	21·02	21·46	22·07	21·86	21·86
127	Heat theoretically required per minute by the Institution of Civil Engineers' standard of comparison per I.H.P. (Rankine's cycle), ... B.T.U.,	142·4	142·5	130·2	128	126	128·5
127*a*	Maximum work theoretically obtained from 1 lb. of steam working in a Rankine ideal engine between the limits of temperature given in lines 111*a* and 106, ... foot-lbs.,	303,400	301,800	337,600	344,600	349,300	340,700
128	**Efficiency ratio,**	0·72	0·71	0·66	0·67	0·65	0·66
128*a*	Thermodynamic efficiency of engine, ...	0·72	0·71	0·66	0·67	0·65	0·66
130	**Lbs. of steam used per I.H.P. per hour,**	9·098	9·267	8·886	8·585	8·682	8·742
130*a*	**Equivalent consumption of saturated steam reckoned from temperature of hotwell,** . . . . . lbs.,	10·63	10·81	10·38	10·03	10·07	10·12

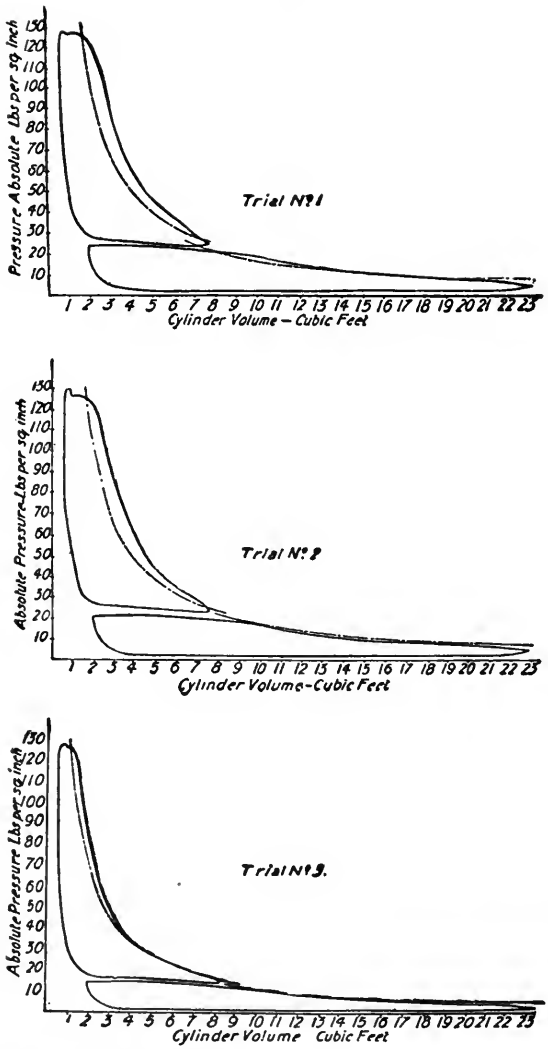

COMBINED INDICATOR DIAGRAMS TAKEN FROM COMPOUND SUPERHEATED STEAM ENGINE.

(*See previous Table and reference further on to Trial Diagrams.*)

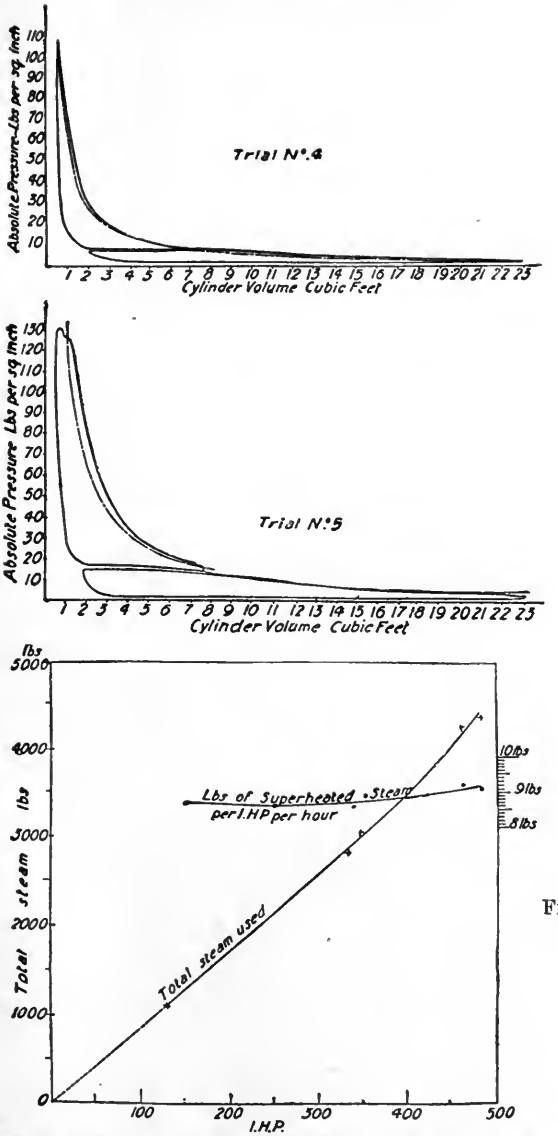

FIG. 7.

COMBINED INDICATOR DIAGRAMS TAKEN FROM COMPOUND SUPERHEATED STEAM ENGINE, WITH PLOTTED RESULTS OF STEAM CONSUMPTION.

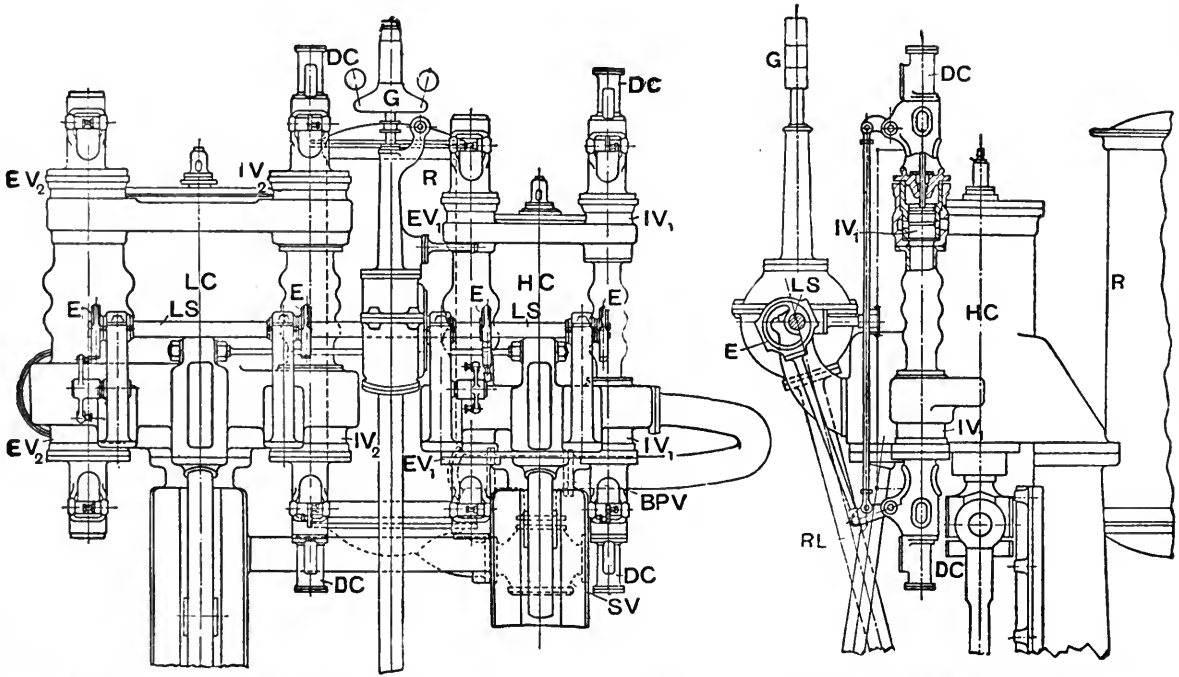

FRONT AND END ELEVATIONS OF VERTICAL COMPOUND ENGINE, USING SUPERHEATED STEAM AND SHOWING IMPROVEMENTS IN DOBSON'S DISTRIBUTING VALVE GEAR.

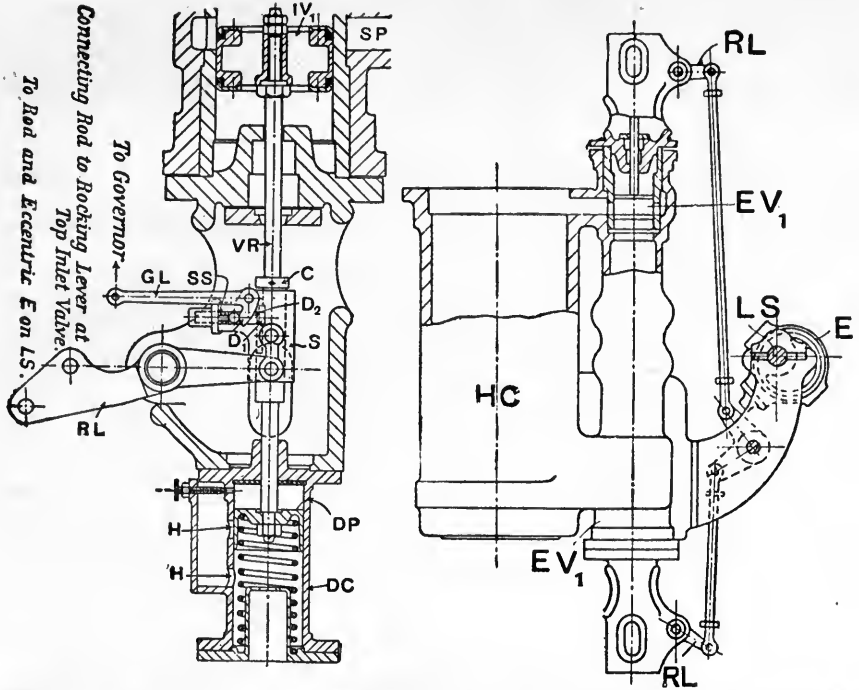

TWO VIEWS SHOWING THE IMPROVEMENTS IN THE DOBSON TRIP GEAR AND ITS OPERATIVE MECHANISM FOR VERTICAL COMPOUND ENGINES USING SUPERHEATED STEAM.

INDEX TO PARTS.

SV	for	Stop valve.
BPV	,,	Bye-pass valve.
IV_1, IV_2	,,	Inlet valves to high- and low-pressure cylinders respectively.
EV_1, EV_2	,,	Exhaust valves to high- and low-pressure cylinders respectively.
HC, LC	,,	High- and low-pressure cylinders respectively.
R	,,	Reheater between high- and low-pressure cylinders.
VR	,,	Valve-rod.
C	,,	Collar.
S	,,	Sleeve.
D_1, D_2	,,	Dies.
SS	,,	Spiral springs.
GL	,,	Governor lever.
G	,,	Governor.
RL	,,	Rocking lever.
E	,,	Eccentrics.
LS	,,	Lay shaft.
DP	,,	Dashpot piston.
DC	,,	,, cylinder.
H	,,	Holes for air admission.

Line 130*a*.—The weights in this line were found by multiplying the weights in line 130 by the quantities of heat required to raise them from the temperature of the hotwell to evaporate them and to superheat them, and dividing the products by the quantities of heat required to raise 1 lb. of water from the temperature of the hotwell, and to evaporate it into saturated steam at the boiler pressure.

Conclusions.—The methods of trial are so fully set forth in the report that nothing need be said about them here. The whole basis of calculation was the water returned from the hotwell, which was carefully measured and weighed, and the essential figures are simple enough, thus:—So many lbs. of water at a given temperature were pumped into the boiler from the hotwell, and so many lbs. at another temperature were returned to the hotwell. The trials were, unfortunately, of short duration, and a possible chance of mistake creeps in. The weight of the feed-water actually pumped into the boiler was not taken. It was assumed that the delivery from the hotwell accurately represented the water consumption, because all the joints were tight.

We have next to consider the cost at which the high efficiency of this engine was obtained. In the first place, it must be kept in mind that the engine had only two cylinders, and was, so far, much cheaper than a triple-expansion engine. It is worth noting, that the triple-expansion engine has been again fairly beaten by the compound engine. It may be granted at once that this result was secured by the use of superheated steam. If, however, we turn to the last line in the table, it will be seen, that the equivalent consumption for saturated steam is only a little in excess of 10 lbs. per indicated horse-power per hour. Surely this is a somewhat startling admission to make concerning a compound engine working without a steam jacket. It must not be forgotten, however, that the figures do not take account of initial cylinder condensation, and we do not believe that any compound engine working without superheat could, in practice, realise so high an efficiency. The result actually got was obtained by the use of a separately-fired superheater, which did not utilise the waste heat from the boiler gases.

Distribution Valves.—The distributing valves are all of the piston type. The inlet valves to the high-pressure cylinder are $I V_1$, and to the low-pressure cylinder $I V_2$, whilst the exhaust valves to the high-pressure cylinder are $E V_1$ and to the low-pressure cylinder $E V_2$.

Four piston drop valves are arranged to work vertically in suitable chambers attached to each cylinder, thus allowing the piston rings to take up their natural position on the circumference of the valve chamber, as well as reducing their wear and tear.

The steam inlet valves are operated by eccentrics through suitable levers, and release mechanism of the trip type, as shown by the separate end sectional view of the gear. Here $I V_1$ is the lower steam inlet valve to the high-pressure cylinder H C, mounted on the spindle or valve-rod V R. This spindle is secured to the dashpot piston D P, and it has a square or rectangular cross-section at the other end. A sleeve S is fitted on the square part of the spindle, which can slide to and fro thereupon. The square part of the spindle carries a die D_1, and the sleeve S carries another die D_2. By means of a spiral spring or springs S S, die D_2 is given a constant pressure to keep it close to the spindle, and thus to engage with the die D_1. A governor lever G L is pivoted to the sleeve S. This lever is provided with a "nib" to catch the extensions of the die D_2 at such a time in the movement of the sleeve as may be determined by the speed and consequent position of the governor. The sleeve S receives a positive

movement by means of the rocking lever R L from an eccentric E, or it may be a crank mounted either on the main shaft or as shown on the lay shaft L S.

How the Inlet Distribution Valves are Operated.—The die D_2 is in a position to engage with the die D_1 when the sleeve S is at the lowest point of its stroke. The dashpot piston D P causes the steam inlet valve $I V_1$ to close the steam port S P.

The rocking lever R L now moves the sleeve S, and lifts with it the spindle V R and valve $I V_1$ until, by its movement, the trip-lever extension comes in contact with the die D_2. Then, by still further movement, it disengages itself, thus releasing the spindle V R from the sleeve S, when the stored energy of the spiral spring within the dashpot quickly closes the valve $I V_1$. By means of the piston D P, moving inside the dashpot cylinder D C and the air-holes H, an air cushion is formed, which brings the moving parts quietly to rest.

How the Exhaust Distribution Valves are Operated.—These exhaust valves $E V_1$ and $E V_2$ are independently operated by a positive motion received from a crank or eccentric, which is mounted either on the engine shaft or as shown upon a lay shaft L S. The motion is transmitted by means of a wrist-plate action in such a way as to give the valve the full port opening to exhaust, whilst the amount of lap and, consequently, the total travel of the valve is reduced to a minimum, which thereby lessens the wear and tear.

Steam Reheater.—The engine, as shown, is arranged with one high-pressure cylinder H C, one low-pressure cylinder L C, a reheater receiver R, a starting valve S V, and co-operating mechanisms. Steam arrives at the stop valve S V, and, upon this valve being partly or wholly opened, the steam passes to the interheater R, which is only used when superheated steam is employed.

This interheater is constructed with internal tubes. These tubes are so arranged, that the boiler steam passing through or around them heats them, and, consequently, parts with a portion of its heat to the receiver steam as it passes from the high- to the low-pressure cylinder. The boiler steam used in the reheater itself passes to the high-pressure admission valves.

In order to regulate the temperature of the steam supplied to the high-pressure cylinder, a bye-pass valve B P V is provided on the engine side of the stop valve S V. This valve can be regulated by hand so as to allow part of the steam to pass direct to the high-pressure cylinder without going through the interheater.

The object of this arrangement is to obtain an engine capable of working satisfactorily with either saturated or with highly-superheated steam (of, say, 450° F. and upwards) without the valves becoming leaky by cutting, wear, or distortion due to the high temperature.

Indicator Diagrams.—By referring back to the combined indicator diagram figures for the tests notified in the table of results, it will be clearly seen, that the effect of using such highly superheated steam was to keep the expansion curve in the high-pressure cylinder well above the saturation curve throughout the stroke, and to keep the steam just dry enough until the point of release in the low-pressure cylinder.

Horizontal Corliss Engine, with the Inglis and Spencer Trip Gear.—The accompanying plate shows a complete simple engine, as made by Hick, Hargreaves & Co., Ltd., for paper mills and other places where the exhaust steam may be utilised for heating or other purposes, instead of being directly condensed to increase the horse-power of the engine. Two separate eccentrics and wrist plates are employed for the steam and exhaust valves, thereby allowing of a wide range of trip. The Inglis and Spencer slip-rod is clearly shown, and also the connection of the toe levers to the governor. The trip-rods are made to move in equal and opposite directions by toothed sectors fastened to the spindles on which the levers carrying the trip-rods are secured. These sectors are situated underneath the dashpot. It will be seen that the balanced Porter governor is driven from the crank-shaft by two pulleys and a belt or ropes.

Hick-Hargreaves' Compensating Steam Dashpot.—The dashpot shown in the following plate is designed to automatically overcome the objections against the ordinary dashpot for Corliss valve engines, by making use of the variable pressure, which causes the varying friction of the valve to also act on a piston employed to close it, with the result that the force bears a constant ratio to the load. The dashpot consists of an upper steam cylinder and a lower air-cushion cylinder, which are combined in one casting attached to the valve bonnet. The steam cylinder contains a simple piston, the upper side of which is exposed to the steam chest pressure, whilst its underside is exposed to the cylinder pressure, just like the admission valve, the connections being made by the small copper pipes seen in the left-hand view. The piston-rod of the small steam cylinder is made of a larger diameter than is needed for mere strength. The area, which is acted on by the difference between the steam chest and atmospheric pressures, is made sufficient to overcome the constant friction and inertia of the parts, whilst the variable and larger proportion of the load upon the steam valves is "taken care of" by the varying pressures acting on the remaining annulus of the piston. The steam cylinder is so proportioned to close the valve under its maximum coefficient of friction, and an air-cushion cylinder (with an air valve of special construction capable of fine adjustment) is provided on its under side to take up any surplus energy. This form of dashpot has entirely fulfilled the makers' expectation, and has been fitted by them to engines of from 1,450 to 1,600 I.H.P., one of which has been running for some time at the Leeds Corporation Tramway Power Station. It is from a photograph of this engine that the illustration has been prepared.

The valve gear to which this dashpot is applied is of the "Frickart" type, in which the trip is actuated positively by a supplementary eccentric, instead of relying upon springs to bring the catches into gear, and the opening motion of the valve, thus securing several advantages, including (1) an approach to positive action, (2) allowing the valve gear to run at a high speed, and (3) a full opening of the steam port at a much earlier point in the stroke than with Corliss gears of the usual type

[*To face p.* 366.

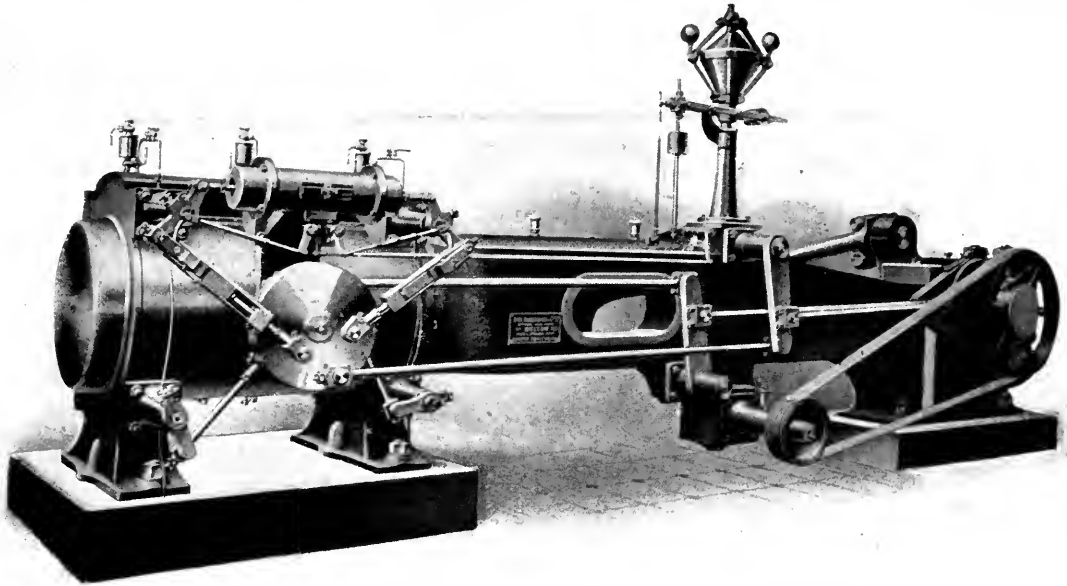

HORIZONTAL SINGLE-CYLINDER CORLISS ENGINE.

As made by Hick, Hargreaves & Co., Limited, Bolton.

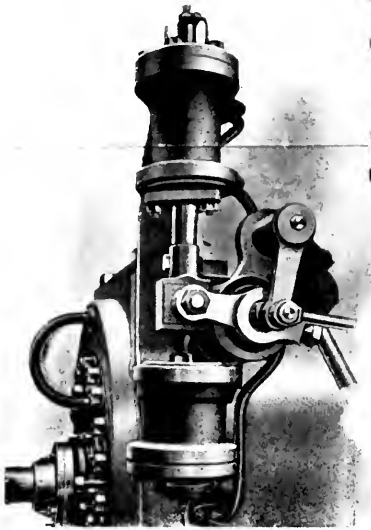

Compensating Steam Dashpot.

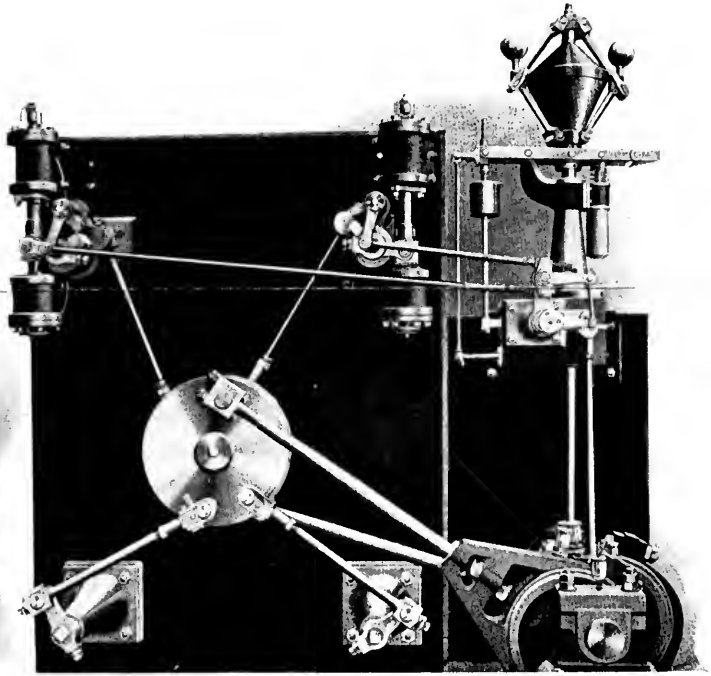

Corliss Valve Gear, with Two Compensating Steam Dashpots.

As made by Hick, Hargreaves & Co., Limited, Bolton.

To face p. 367].

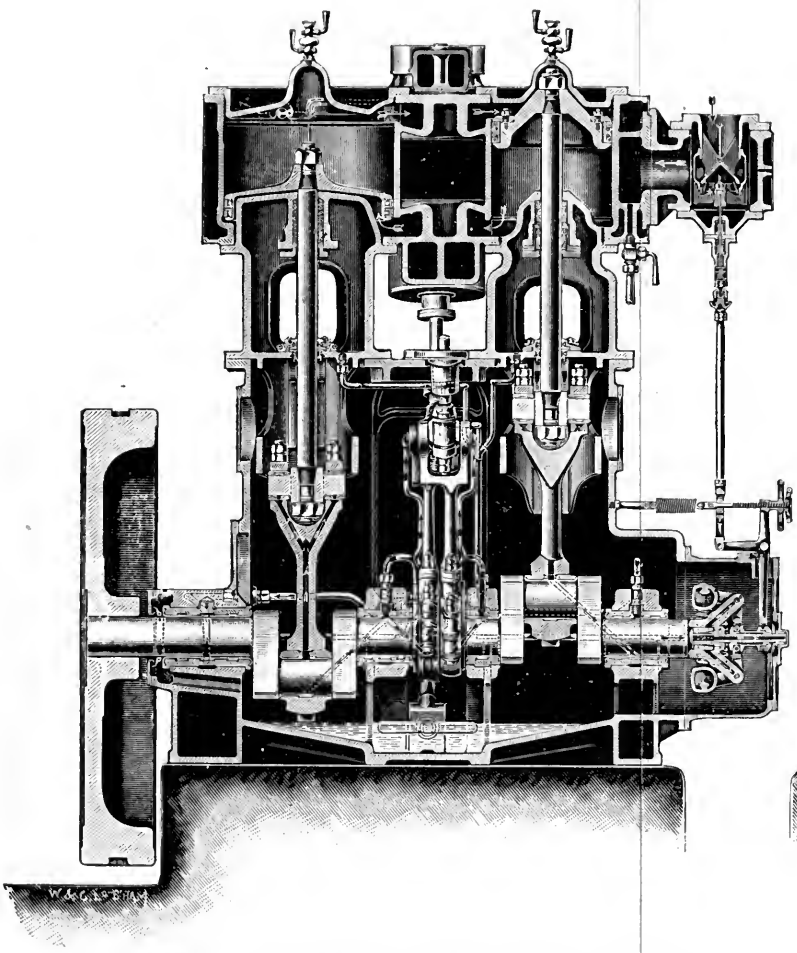

Longitudinal Section through High- and Low-pressure Cylinders.

Two-Crank "V

(By Bell

Chests.

ed Valve Engine.

mingham.)

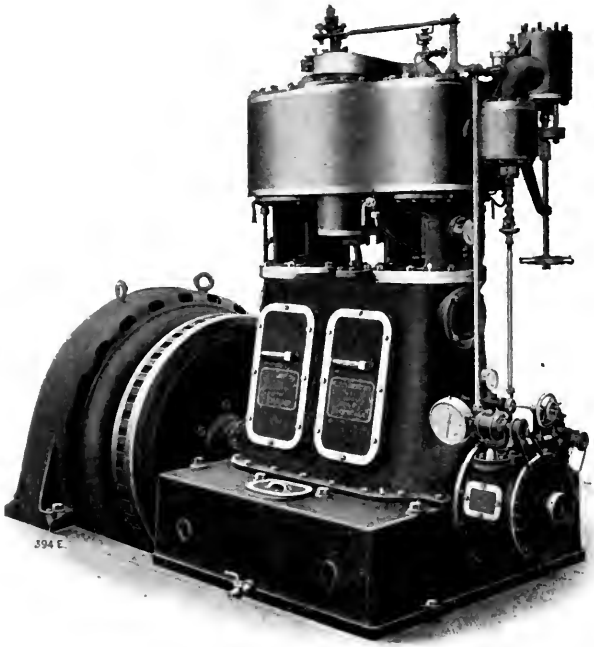

Outside View of Engine and Dynamo.

Compound Engine with Automatic Lubrication.—A good example of the lubrication of several journals and slide blocks from one common source of supply under pressure, is furnished by Bellis and Morcom's compound engines for the direct driving of dynamos. It will be seen from the Folding Plate, that not only the main crank-shaft bearings, but also the crank-pins, slide-blocks, the upper ends of the connecting-rods, the piston-valve eccentric and its rods and the governor, are all supplied with oil from a small pump worked by the same eccentric which moves the piston valve. The oil is thereby forced through *each* bearing under a pressure of 10 lbs. per square inch, and is again and again sent on its soothing-mission for months at a time, without change or great loss in quantity. A heavy lubricating oil is used, and it always returns to the small pump through a filter which removes any grit that it may have picked up from the bearings. This is a very different state of matters from the old "travelling oil-can" system, when the quantity of oil applied and the times of application were as erratic as the judgment of the attendant.

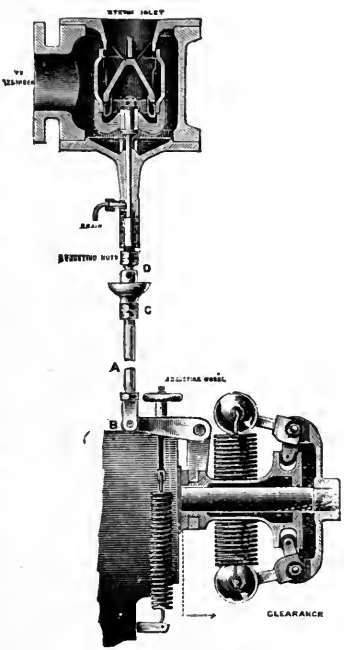

FIG. 11.—GOVERNOR FOR BELLISS-MORCOM ENGINES.

"A special feature of this engine as originally introduced was that both cylinders were supplied with steam by one slide valve, or rather two slide valves superimposed in the same valve chest and worked by one eccentric and valve rod. A very large number of engines of this design, known as the 'C' type, have been made and are in operation. Of late years, to meet an increasing demand for a two-crank compound capable of dealing with considerable overloads, Messrs. Belliss and Morcom have introduced a modified design, having the high- and low-pressure slide valves in separate valve chambers, the slide valves being set at an angle on either side of the centre line, and operated radially from the shaft as a centre by separate eccentrics. The high-pressure valve cuts off on the inner or adjacent edges and exhausts directly to the low-pressure, thus avoiding the use of outside receiver pipes equally with the original 'C' type engine. This newer design of engine is generally known as the 'V' type, and is fitted with automatic expansion gear. With separate eccentrics the cranks may, if desired, be placed at right angles with each other, but are more often set opposite, the steam being

admitted simultaneously at the top of one cylinder and at the bottom of the other. By this arrangement the reciprocating parts are to a great extent balanced, the stresses on the bearings much reduced, and a high speed of revolution is made possible without setting up undue vibration, The engine is fitted with a centrifugal governor as shown, this being carried on the crank-shaft, and connected to an equilibrium throttle valve. The governor is also arranged for varying the expansion by rotating the high-pressure slide valve, which has diagonal cut-off edges. The governor gear is arranged so that the speed of the engine is capable of being altered by the adjusting wheel through a range of 5 to 10 per cent. whilst running. The centrifugal force of the two governor balls is chiefly resisted by the springs connecting them, but is partly opposed by the adjusting spring. In the event of any one of these springs breaking the balls instantly fly outwards, thus closing the throttle valve and stopping the engine. A variation of speed not exceeding 3 per cent. between full and no load can be guaranteed with these engines, and consequently they are found suitable for the direct driving of dynamos supplying current to an electric light or power installation, as shown by the Folding Plate."

Triple-Expansion Engine with Automatic Lubrication.*—The accompanying Folding Plate serves to illustrate one of the best examples of vertical, inverted cylinder double-acting quick-revolution engines. These engines run at very high speeds without any fear of excessive wear and knocking of the connecting-rod brasses. The difficulty usually experienced when running double-acting engines at over 300 revolutions per minute arises from the necessity of such close adjustment of the brasses to avoid audible knock and shock. Thus, a small increase in temperature of the crank-pin may cause sufficient expansion to make it overtake the small clearance which is generally allowed for the bearing when cold. Consequently, this close adjustment renders the pin and its bearing liable to get hot and seize. The success of the Belliss & Morcom engines is largely due to supplying the lubricant under pressure to the several moving parts. The pressure necessary for this purpose is not nearly equal to the maximum pressure on the bearing due to the weight of the engine, but only sufficient to force the oil into the bearing during a return stroke. The time taken by the piston in its upward stroke is too short to allow the oil to be squeezed from between the rubbing surfaces before

* Students are referred to the following papers should they desire any further information upon this subject:—*Proceedings of the Inst. C.E.*, vol. cxxxvi., "High-speed Engines," by John Handsley Dales, A.M., Inst. C.E.; and vol. cxlv., "Delannay Belleville's High-speed Engine," by M. Aliamet.

the pressure is again reversed and a fresh supply of oil given to the surfaces, as just explained in the case of the compound engine by the same makers.

Results with Superheated Steam.—The following set of results, plotted in Fig. 12, were obtained from a 300 B.H.P. triple-expansion condensing engine using different degrees of superheat up to 307° F., or a total temperature of 677° F. The results show that the percentage gain or saving in pounds of steam per I.H.P.-hour agree very closely with those quoted in Lecture XVI. with reference to the Willans engine. These results are quoted in the following table, as well as others from engines of different powers by the same makers, working at different loads and speeds. The student should plot out these

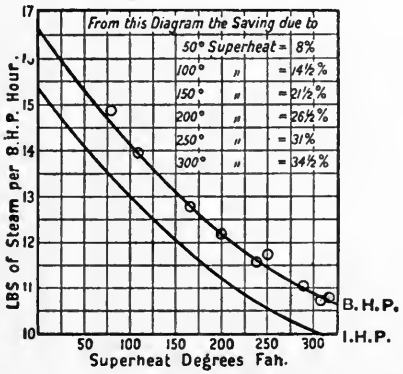

FIG. 12.—RESULTS OBTAINED WITH A 300-B.H.P. BELLISS & MORCOM'S TRIPLE-EXPANSION ENGINE, USING SUPERHEATED STEAM OF 160 LBS. PRESSURE, AND A VACUUM OF 26·75 INCHES AT 475 REVOLUTIONS PER MINUTE.

results to scale, and thus present their several values in graphic form.

Although the remarkable economy shown by the results plotted in Fig. 12, of requiring only 10 lbs. of steam per I.H.P.-hour, were obtained from these quick revolution engines, yet, the author feels bound to state, that great care should be observed by those who meditate using such highly superheated steam of 600° F. or more.

SOME RESULTS OBTAINED WITH BELLISS & MORCOM'S TRIPLE-EXPANSION SELF-LUBRICATING ENGINES, USING SUPERHEATED STEAM.

DATA.	D.E. 475 R.P.M. 25/1/04.	Dynamo Engine at 340 R.P.M. 9/2/03.				D.E. 200 R.P.M. 9/8/03.	Dynamo Engine at 380 R.P.M. 24/10/02.			Dynamo Engine at 360 R.P.M. 2/12/02.			
Load, ...	Full	Full	¾	½	¼	Full	Full	Full	Full	Full	Full	Full	Full
Steam pressure in range, . .	160	165	163	164	155	183	170	170	170	190	190	190	190
Temperature in Fah. degrees, .	677°	572°	565°	553°	472°	445°	485°	511°	559°	407°	432°	472°	492°
Superheat in Fah. degrees, .	307°	200°	193°	180°	104°	64·4°	110°	136°	184°	24°	49°	89°	109°
Vacuum at engine, ...	26·75″	25·4″	25·9″	25·8″	26″	25·6″	26″	26″	26″	25″	25″	25″	25″
B.H.P., ...	300	522	394·5	262·5	130	...	...	...	...	...	...	...	...
Consumption per B.P.H. hour,	10·75	11·15	11·23	11·6	14·35	13·3	13·3	13	11·9	15·4	14·6	13·6	13·2
Kilowatts, ...	...	...	...	...	...	1,436	216	220·4	220	305	308	306	308
Consumption per K.W.T. hour,	15·45	16·1	16·5	17·7	22·7	19·15	19·23	18·78	17·21	22·2	21·1	19·6	19
Dynamo efficiency (assumed), .	93 %	93 %	91 %	88 %	85 %	93 %	93 %	93 %	93 %	93 %	93 %	93 %	93 %

Necessary Precautions to be observed with Superheaters and with Highly Superheated Steam.—1. Superheater tubes are liable to get warped, burned, or chemically acted upon unless properly designed, made, erected, and worked.

2. Highly superheated steam erodes or cuts into brass and gun metal. Nothing less than nickel steel would permanently stand its effects upon valves and valve seats.

3. Highly superheated steam spoils the working surface of the softer kinds of cast-iron cylinders. Great care should be taken in applying superheated steam to cylinders which are not made of the very best, hard grey, close-grained cast iron.

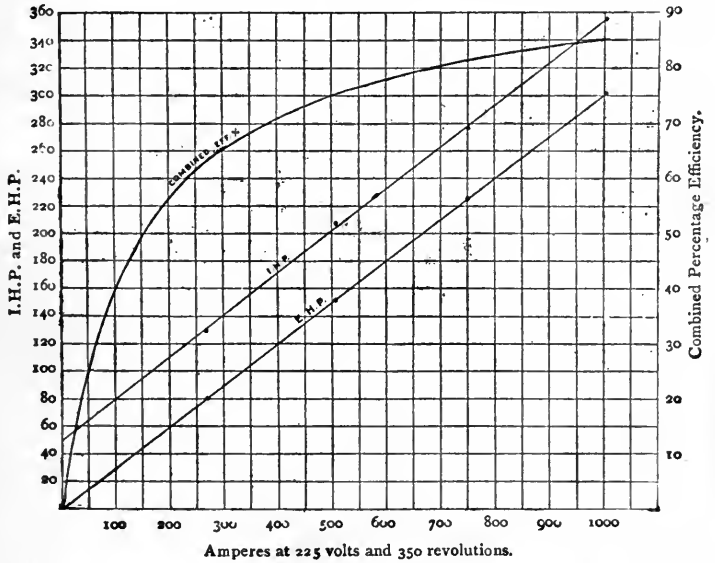

FIG. 15.—EFFICIENCY CURVE FROM A FULL LOAD TEST MADE ON A 360-H.P. NON-CONDENSING WILLANS ENGINE AND A SIEMENS DYNAMO.

DATA.—I.H.P. = 355·7; E.H.P. = 302·2; mean steam pressure = 51·17; revolutions per minute = 350; cut-off = ·5; steam pressure = 136 lbs. per square inch.

4. When plumbago or graphite is used as a lubricant for cylinders, it is apt to clog and jam the piston rings, &c.

5. It has been found that engines in a first-rate condition

may be run with very little lubrication. When lubrication is necessary with superheated steam, then only the best kind of high flash point lubricant should be used, such as "valvoline."

6. Steam pipe and cylinder laggings, as well as everything which come into contact with steam pipes containing very highly superheated steam, should be fire-proof, since they may be subjected to temperatures approaching 700° F.

7. The stresses arising from highly-superheated steam were very great, and due allowance must, therefore, be made in the design of an engine to permit of free expansion without twisting, warping, or overstraining the parts thus affected by the extra heat.

Tests of Willans' Engine.—The foregoing curves (Fig. 15), together with the attached data, give a clear idea of the combined efficiency of the indicated horse-powers, I.H.P., the electrical horse-powers, E.H.P., and the combined efficiency of a 360 H.P. non-condensing compound Willans engine when coupled to a Siemens dynamo.

The following data gives the mean results of four sets of independent tests of a 400-H.P. Willans triple-expansion condensing engine when supplied with ordinary dry saturated steam :—

TEST OF WILLANS' ENGINE.

Effective area of cylinders—three of each: high pressure, 90·836 *square inches; intermediate*, 345·44 *square inches; low pressure*, 587·175 *square inches. Stroke*, 10·24 *inches.*

Mean boiler pressure above the atmosphere,	190 lbs. per sq. in.
Mean admission high-pressure cylinder,	169·5 lbs. per sq. in.
Mean effective pressure on low-pressure cylinder,	28·918 lbs. per sq. in.
Mean vacuum,	25·925 inches.
Mean revolutions per minute,	299·8.
Mean I.H.P.,	394·775.
Mean total feed-water per hour,	5,050 lbs.
Mean deductions for separator and other drains per hour,	117·1 lbs.
Mean total steam to engine per hour,	4932·9 lbs.
Mean steam used per I.H.P. per hour,	12·49 lbs.

Percentage Gain in Steam and in B.T.U. with Willans' Engine when supplied with Superheated Steam.—The curves and table of data given in Lecture XVI. regarding these gains show that with a triple-expansion engine giving 315 I.H.P., and using steam of 162 lbs. pressure by gauge with 180° F. of superheat, that the gain in steam used is fully 24 per cent. Now, applying

this to the previous case, where the steam used per I.H.P.-hour was 12·49 lbs. with saturated steam, we get—

$$100 \text{ per cent.} : 76 \text{ per cent} :: 12{\cdot}49 \text{ lbs.} : x \text{ lbs.}$$

$$\therefore \quad x = 9{\cdot}5 \text{ lbs.}$$

with the same degree of superheat and assuming the same efficiency.

The Willans Central-Valve Engine.*—As will be seen from the accompanying figure the engine is single-acting, having all its brasses and moving parts constantly in compression, to enable it to run at a high speed without knocking. The slide valves are of the piston type, and work inside the piston-rods. This method affords a very direct distribution of the live steam and a free drainage for the condensed steam. The high piston speed employed in this engine is in itself conducive to economy, and the Willans engine (as proved by many tests of undoubted authority) is one of the most economical steam motors. With a small condensing engine indicating only 20 horse-power and running at 400 revolutions per minute, a consumption of 13 lbs. of steam per I.H.P. hour has been recorded, and a little over 18 lbs. when worked as a non-condensing engine.

Cranks, Connecting-rods, and Eccentrics.—Each line of pistons is connected to its corresponding crank by two exactly similar connecting-rods, with a space between, in which works an eccentric, *forged solid upon the crank-pin*. The connecting-rods at their top end engage two hardened steel pins, so supported that the pressure of the rods exerts no twisting stress upon them, and the eccentric-rod plays up and down freely in the space between them. The piston slide valves move *inside the hollow piston-rod*, R, which passes completely through the line of pistons, and through the ends of the cylinders. The reason for placing the eccentric on the crank-pin, and not on the crank-shaft as usual is, that the valve face (*i.e.*, the inside surface of the hollow piston-rod) *moves with the pistons*. Consequently, the valve-motion required is a motion *relative to the pistons*, and this is obtained by mounting the eccentric on the crank-pin, which, like the piston-rod, moves up and down with the pistons. Though its lead is set out differently from that of an ordinary eccentric, its effect upon the movement of the valves is exactly the same.

Cylinders.—The annexed sectional view shows a standard pattern engine of G.G. size, which has low-pressure cylinders of 14″ diameter and 6″ stroke.

---

* Students who desire to thoroughly study the excellent work done by Mr. Willans in the evolution of quick-revolution engines, should refer to the following papers with the discussions upon them. They should also refer back to Lecture XVI. for the saving in feed-water, steam, and B.T.U. See *Proc. of Inst. C.E.*, vol. lxxxiii., p. 106, for "High-Speed Motors," by John Imray, M.A., M.Inst.C.E.; vol. xciii., p. 128, for "Economy Trials of a Non-condensing Steam Engine: Simple, Compound, and Triple;" vol. cxiv., p. 2, for "Steam Engine Trials;" and vol. xcvi., p. 230, for "Economy Trials of a Non-condensing Steam Engine: Simple, Compound, and Triple"—all by P. W. Willans, M.Inst.C.E.

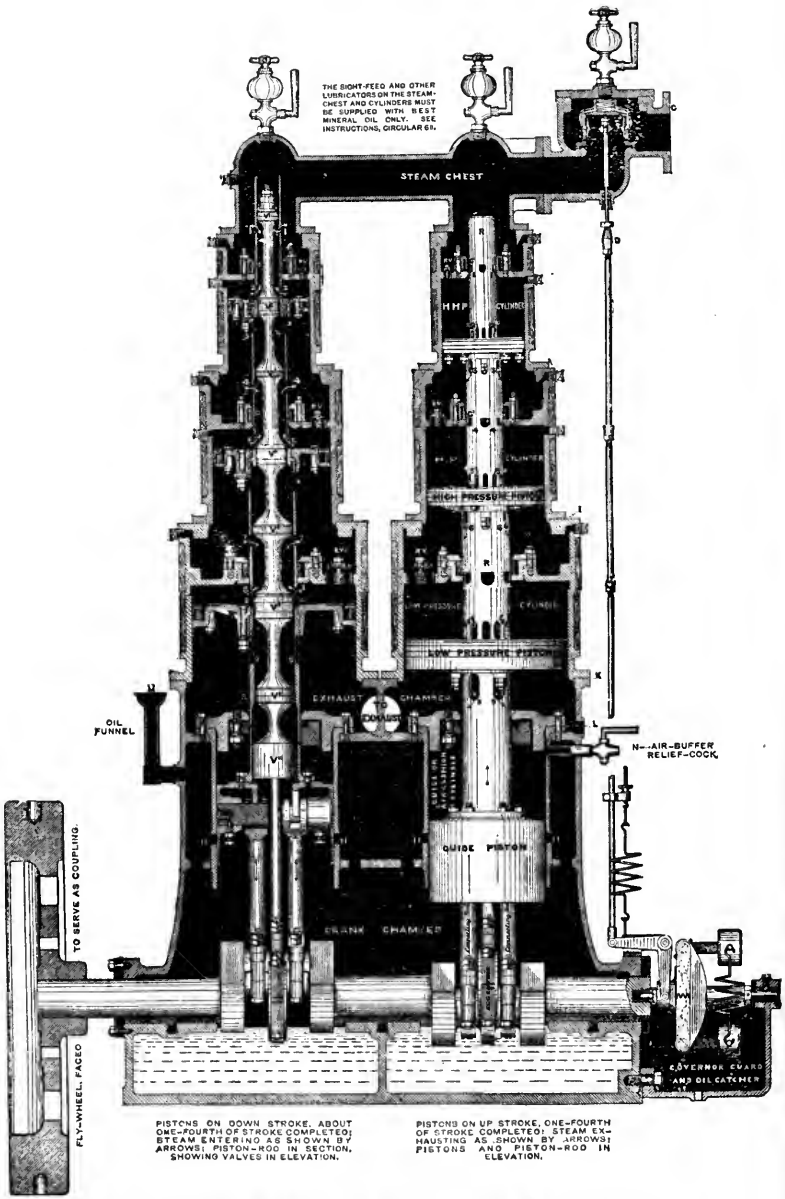
THE SIGHT-FEED AND OTHER LUBRICATORS ON THE STEAM-CHEST AND CYLINDERS MUST BE SUPPLIED WITH BEST MINERAL OIL ONLY. SEE INSTRUCTIONS, CIRCULAR 61.
STEAM CHEST
H.P. CYLINDER
I.P. CYLINDER
HIGH PRESSURE PISTON
L.P. CYLINDER
LOW PRESSURE PISTON
EXHAUST CHAMBER
TO CONDENSER
OIL FUNNEL
AIR-BUFFER RELIEF-COCK.
GUIDE PISTON
CRANK CHAMBER
TO SERVE AS COUPLING.
FLY-WHEEL FACED
GOVERNOR GUARD AND OIL CATCHER
PISTONS ON DOWN STROKE, ABOUT ONE-FOURTH OF STROKE COMPLETED; STEAM ENTERING AS SHOWN BY ARROWS; PISTON-ROD IN SECTION, SHOWING VALVES IN ELEVATION.
PISTONS ON UP STROKE, ONE-FOURTH OF STROKE COMPLETED; STEAM EXHAUSTING AS SHOWN BY ARROWS; PISTONS AND PISTON-ROD IN ELEVATION.

WILLANS' CENTRAL-VALVE TRIPLE EXPANSION ENGINE.

The right-hand line of pistons, with the hollow piston-rod, is shown in elevation, while the left-hand line is in section, with the piston-valves in elevation. In the right-hand line of pistons (which is upon the up-stroke) the course of the exhaust steam is indicated by arrows, but the piston-valves are necessarily invisible.

It will be noticed that a compound, or even a triple-expansion, Willans engine, may be run as a simple engine without removing the upper cylinders, by merely removing the upper pistons, and the piston-valves corresponding with them. In fact, either the steam-pistons or the valves might be left, were it not for the useless friction of the rings. The upper cylinders, in such a case, become a mere extension of the steam chest. It is sometimes a practical convenience to be able thus easily to alter a compound to a simple engine, or a triple-expansion to a compound.

Steam Distribution.—Referring to the left-hand line of pistons (which has completed ¼ of the down-stroke), it will be seen that the steam from the boiler (after it passes the throttle-valve and the steam-chest) enters the hollow piston-rod by the uppermost openings, 1, 1. From thence it goes into the H.H.P. cylinder by the second set of piston-rod openings, 2, 2. Cut-off takes place at about ·6 of the piston's stroke by the passage of the ports, 1, 1, into the first gland, G. Exhaust takes place by the second piston-valve, V^2, rising above the ports, 2, 2, and thus permitting the steam to pass out of the uppermost cylinder through these ports, 2, 2, into the hollow piston-rod and from there through the openings, 3, 3, into the receiver for the next cylinder. From this receiver, the steam again enters the hollow piston-rod by the ports, 4, 4, and out to and above the H.P. or second piston by the openings, 5, 5. Cut-off and exhaust take place for this in the same way as for the first cylinder—viz., cut-off by the passage of ports, 4, 4, into the second gland, G, and exhaust by the piston-valve, V^6, rising above the ports, 5, 5, thus permitting the outgoing steam to pass through them and then through the openings, 6, 6, into the receiver for the third or low-pressure cylinder. Here again admission, cut-off, and exhaust take place, as in the case of the previous two cylinders, viz., admission from the second receiver by ports, 7, 7, and 8, 8; cut-off by ports, 7, 7, becoming covered in their downward passage by the third gland, G, and exhaust by piston-valve, V^8, rising above ports, 8, 8, and letting the steam through them into the hollow piston-rod and out through holes, 9, 9, into the exhaust chamber during the whole of the up-stroke. The exhaust pipe from this chamber may either communicate directly with the atmosphere or with a condenser. Piston-valves, V^9 and V^{10}, constitute a guide for the bottom of the valve-rod, V^{10}, has no packing, and there are holes in it in order to afford a free passage of water or oil through the same.

It will be noticed that in the simple non-condensing engine, the steam remains in the engine, from the commencement of admission to the end of exhaust, for one revolution, as in ordinary engines. But in the compound non-condensing engine, the steam remains for two, and in the triple-expansion engine for three, whole revolutions. In other words, the steam is practically quiescent in a receiver of some kind for half a revolution between each two stages of expansion, and this (which is only possible in a single-acting engine) enables the range of temperature in the several stages to be divided advantageously.

Drainage.—The water above each piston is swept downwards by the exhausting steam into the space below *during the whole of the exhaust stroke;* it has not to be carried by the piston to the top of the cylinder, and then driven out suddenly through the port in a more or less upward

direction, as in the case in other forms of vertical engine. The Willans engine has, therefore, unique advantages in getting rid of water from the cylinders, apart from the action of the relief-valves.

Air Cushioning in Guide Cylinders.—Reference has been made to the fact that all the moving parts are constantly in compression—a condition rendered possible only by the fact that the pistons are single-acting, giving no pull to the crank upon the up-stroke, but only a push upon the down-stroke. In any engine running at high speed the moving parts can only be kept in compression upon the up-stroke by very great cushioning. This is rarely obtained in other high-speed engines without excessive compression in the cylinders, which naturally involves a certain waste of steam. Sometimes, when a high-speed engine exhausts into a vacuum, sufficient cushion cannot be obtained *at all* by the usual means. In the Willans engine very little compression is given in the steam cylinders, for little or none is required. The requisite cushioning is obtained independently by the guide pistons. These pistons, on the up-stroke, compress the *air* contained in the guide cylinders, and thus any desired amount of cushion can be obtained, according to the clearance allowed.* The work expended in compressing the air is *given out again by its expansion on the succeeding down-stroke*, and the loss, when the engine is running at a good speed, is proved by indicator diagrams to be too minute to be worth consideration. There are holes, 11, 11, in the guide cylinders, which are uncovered by the guides at the bottom of the stroke. As the casing or chamber which surrounds the guide cylinders (and which forms part of the framing of the engine) is open to the atmosphere, it is evident that the air compression always commences at atmospheric pressure, and is constant and invariable in its results, whatever alteration may be made in the pressure of the exhaust steam.

The Brasses and all parts in Compression.—The upper crank-pin brasses of the connecting-rods are wider than the lower ones. This is because the upper brasses alone are intended to be in actual contact with the crank-pins; the lower ones are only a stand-by in case of accident. All the moving parts of the engine are designed to be strictly in "constant thrust;' the connecting-rods are *always in compression, never in tension.* A small hole is drilled in each guide piston, $\frac{1}{8}$ inch in diameter, so as to be just visible below the bottom edge of the guide cylinder when the crank-chamber door is removed, and when the piston is at the bottom of its stroke. When the entire diameter of this small hole is in view below the guide cylinder, it is time both to set up the brasses (so as to reduce the play) and to pack up the connecting-rods by inserting packing pieces between the big ends of the connecting-rods and the brasses. The connecting-rods, however, must not be packed up sufficiently to take the hole quite out of sight, for its lower side must still be in sight (at bottom stroke) under the edge of the guide cylinder. If the hole goes out of sight entirely, there will not be enough clearance for safety between the low-pressure piston and the top of its cylinder.

The eccentric-rod is also intended to work in compression, in the same way as the connecting-rods. The holding-down pressure is furnished by the steam in the steam chest, acting constantly upon the uppermost piston-valve, V^1. It may sometimes happen, if the engine is run with a very light

* The amount of cushion is fixed in each case to suit the intended speed, and may be insufficient to prevent knocking if that speed is largely exceeded. If for any reason it is desired to run an engine materially faster than was originally intended, and the engine is found to knock at the increased speed, the speed must be reduced until the knocking disappears.

load, but at a high speed, that the pressure in the steam chest (being much throttled down by the governor) is insufficient to keep the eccentric-rod in contact with the eccentric upon the up-stroke. If this be the case then a slight knocking may be heard, as the lower eccentric-strap is purposely left an easy fit upon the eccentric. Such knocking is unimportant, if not allowed to continue too long, and it will cease as soon as the engine is given work to do.*

A further reason for the moderate wear of the brasses (and eccentric straps) is that they dip bodily into the lubricant in the crank chamber at every revolution. In doing so they splash it over the main bearings, and to the upper ends of the connecting-rods and eccentric-rods, and into the guide cylinders, as well as into that part of the hollow piston-rod where the guide, V^{10}, works. The lubrication of the working parts (other than steam pistons and valves) is thus completely automatic. It is sufficient to mention here that (according to the usual method of working) the crank chamber contains not oil only, but oil and water mixed. As the temperature of the mixture cannot possibly rise above that of boiling water, there is a practical guarantee against hot bearings, so long as the supply of water is maintained and suitable oil is used.

Internal Relief-Valves.—In the low-pressure cylinders of all engines, and in the high-pressure cylinders, if large enough to be so treated, internal relief-valves are fitted, consisting of a gun-metal plug screwed into the top of the low-pressure cylinder. The plug is pierced by holes, covered by a single thin gun-metal disc. When the disc is raised, there is free communication between the cylinder and the receiver (or steam chest) above it. It is kept down under ordinary circumstances by the excess of the receiver-pressure over that in the cylinder; therefore no spring is required, and there is no part liable to get out of order. If from water in the cylinder, or any other cause, the pressure rises above that in the receiver, the valve lifts, and though the water is only passed back into the receiver, the relief is found to be sufficient, and, in fact, far more effective than that given by ordinary external relief-valves. Engines so fitted have been tested by discharging a cubic foot of water suddenly into the steam-pipe; also by connecting the steam-pipe with the water-space of the boiler (by a ½-inch pipe, with a difference of 80 lbs. between the pressure in the boiler and that in the steam-pipe) without any injury to the engine in either case. In cases where internal relief-valves cannot be used, ordinary external valves are fitted. When an engine is run without load the compression in the low-pressure cylinder may rise beyond the pressure in the receiver; the disc of the valve may then be heard to lift at each revolution, but the noise will go off as soon as the receiver-pressure is increased by giving the engine work to do.

Air-Cocks.—Air buffer relief-cocks, N, are fitted upon the guide cylinders, in order to avoid compressing the air in them when the engine is being turned by hand, and to facilitate starting. If the cocks are opened at starting, they must be closed as soon as the engine gets fairly under-way. They must never be open when the engine is running at full speed, or the necessary cushion will be wanting.

Drain-Cocks.—The drain-cocks on the receivers should be fully opened before starting, and should be kept open for a short time after starting. They must, however, be closed and be kept closed while running, except occasionally to draw off any water which may have collected—when they

* The principle of working with all brasses "in constant thrust" is of the utmost importance and value, and is the primary cause, not only of the silent running of the Willans engine, but of the almost complete absence of wear in the brasses.

should be opened only to an extent just sufficient to allow the water to escape. The receiver-drains are connected, by copper pipes, with the exhaust chamber.

Lubrication.—Usually only one lubricator is required, of the "sight-feed" pattern. After the engines have worked for some time, a very small supply of *good* mineral oil will suffice for the cylinders. At M, on the sectional view, is shown a funnel for introducing oil into the crank chamber —preferably the best castor oil, but *not* mineral oil. The funnel (the usual place for which is on the front of the engine, and not where shown) also establishes communication between the air-cushion cylinders and the atmosphere, when the guide pistons are at the lower end of their stroke. When water is required to be added, it should be poured in through the open top of the lubricant gauge, and *not* through this oil-funnel. A gauge enables the quantity of lubricant in the crank chamber to be easily ascertained at any time by the attendant. The normal height at which the lubricant should be maintained is from three-quarters of an inch to an inch below the underside of the crank-shaft.

Separator.—Every engine is now fitted with a steam dryer, or separator, mounted on one corner of the bed-plate. The steam enters at the top and descends through a hanging pipe into the body of the separator. After leaving the pipe it turns upwards to the exit, which is near the top, while the particles of water, which are heavier, are shot downwards by the velocity with which they leave the hanging pipe. A gauge-glass is fitted, and a drain, the cock on which should be so adjusted as to keep a little water in the glass, just in sight.

Governor.—1. In the accompanying figures the governor balls are shown in the position they assume when controlling the engine. The throttle-valve is of the piston type without rings, and it works up and down in a bush with a closed top. The bush is held down by a coiled spring above, and by the steam pressure, and its lower end, which is faced, makes a steam-tight joint against a face on the casing, as shown. The boiler steam is admitted from the outside of the bush, in which there are two rings of ports, the amount of opening of the lower ring being regulated by the position of the lower edge of the throttle-valve. Corresponding with the upper ring of ports is an annular port in the throttle-valve; the distance of this from the lower edge of the throttle-valve being such that the upper ports commence to open slightly earlier than the lower ones. In cases where, owing to low-pressure, or other causes, only a very small drop in pressure can be allowed between the steam-pipe and the steam-chest, a third ring of ports is sometimes added, with a second annular port in the throttle-valve. The lubrication of the valve is effected by passages in the body of the bush, supplied from a grease cup on the cover. The sight-feed lubricator is attached to the boss dotted on the engraving; it delivers oil on the engine side of the throttle-valve. The spring, F (the lower part of which is hooked to a fixed point on the bracket which supports the bell-crank, E), maintains a constant down pull on the rod, G, and so tends to close the valve. It also tends to force the balls further apart, by depressing the end, R, of the bell-crank, E, and so pushing outwards the loose collar, C (shown partially dotted), and the short ends, N, N, of the arms which carry the balls. But the pre-arranged relation between the centrifugal force of the balls at different speeds, and the pull of the springs, A, at different lengths is such, that so long as the engine is running even slightly below its speed, the pull of the springs, A, overcomes both the centrifugal force of the balls and the pull of the spring, F, and the balls remain near together,

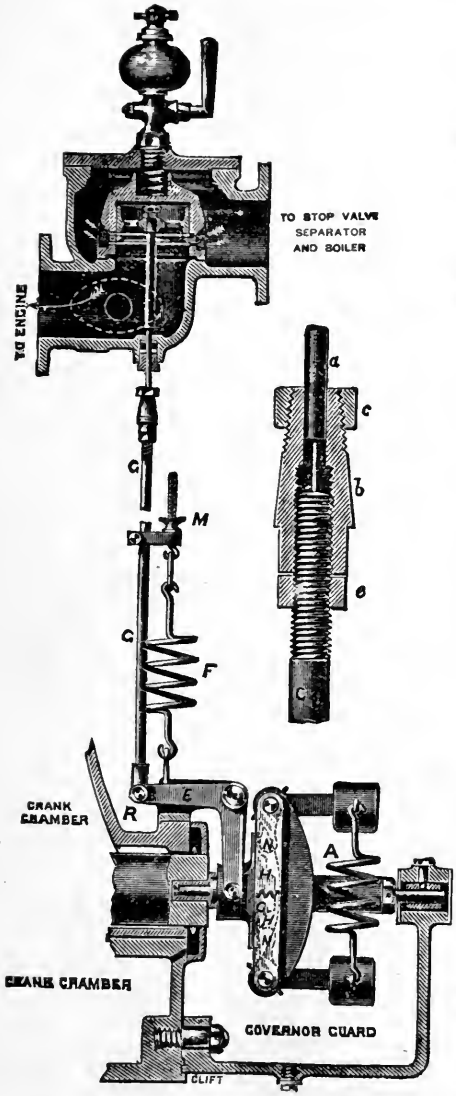

CENTRIFUGAL GOVERNOR FOR WILLANS' ENGINE.

and the valve in its widest open position. At the intended speed (or slightly below it) the centrifugal force of the balls, helped by the spring, F, causes them to overpower the springs, A; and as the arms, N, N, move outwards, and permit the collar, C, and the bell-crank, E, to follow them. The spring, F, is, therefore, able to draw the rod, G, downwards, and to close the valve more or less completely, until the engine runs at its normal speed. If the speed, for any reason, such as reduction of load or increase of boiler pressure, begins to exceed that intended, the balls fly open and the throttle-valve closes until the speed falls again. If, on the other hand, the speed diminishes, the balls are drawn together by the springs, A, and approach one another, the spring, F, is over-powered; and the valve opens. In order to permit a certain amount of end play in the crank-shaft, without causing movement in the throttle-valve, the governor spindle fits loosely in a corresponding hole in the shaft, and is free to move a short distance endways. The outer end of the spindle is supported in a bearing formed in the governor guard, and carries a phosphor bronze ring, which works against the face of the bearing. The spindle is kept up

against this face by the tension of the spring, F, acting through the bell-cranks, E, unaffected by end-play in the crank-shaft which drives it. The levers, H, H, are rigidly attached to the arms which carry the balls, and their free extremities are geared together, as shown. By this means the governor is balanced against gravity in all positions.

It will be noticed that there are four elements which determine the action of the governor in controlling the engine, viz. :—

(1) The weight of the balls which measures their tendency to fly apart at any given speed. If the balls are made heavier, they will overpower the springs, A, at a lower speed; if lighter, the engine must run faster before they will come into action.

(2) The pull of the spring, A, against the balls, and the ratio in which it varies as the distance between them alters.

(3) The pull of the spring, F, assisting the balls.

(4) The position of the valve relatively to the balls, as determined by the adjustment of the length of the spindle, G.

2. The spring, F, as has been explained, assists the balls to open, though its action is small in comparison with the centrifugal effect of the balls. If more tension is put upon it, by means of the thumb-nut, M, the balls will open at a lower speed; if the tension is reduced, they will not open until a higher speed is reached. A moderate adjustment, therefore, can be given by the nut, M. In cases where a considerable range of speed is required a different method is adopted.

Criticism of the Farcot-Corliss Cylinder and Position of the Valves, as shown by Figs. 1 and 2 in this Lecture.—*Best Up-to-date Corliss Cylinders and how they are Arranged.*—Figs. 1 and 2 serve the purpose of enabling the student to obtain a good idea of a Corliss cylinder with the separate positions of its four separate valves. But, first-class makers of Corliss engines aim at designing their cylinders, so that the interior of the cylinder, as well as the piston and piston-rod, may be inspected and the last two withdrawn from the cylinder as easily as possible—*i.e.*, by simply removing the cylinder covers.

Separate Parts constituting the Cylinder:—

(1) The cylinder barrel with its jacket and liner.

(2) The separate steam- and exhaust-valve chambers with ports for the front end.

(3) The separate steam- and exhaust-valve chambers with ports for the back end.

(4) The front and back end covers.

The first three of these sets of parts are so designed, machined, jointed, and bolted together, that they constitute the whole of the cylinder proper. Each part is separately machined, and may be separately repaired and adjusted.

Easy Examination of the Inside of Cylinder and the Piston.—If it be desired to examine the piston or the interior of the cylinder from either or from both ends, it is only necessary to take off and withdraw the front cover as far as the recess in the front framing will permit, and to remove the back-end cylinder cover, without touching any of the valve-chambers, steam or exhaust pipe-joints. By driving out the cotter connecting the crosshead to the front end of piston-rod, the piston with its rod may be then withdrawn from the open back end of the cylinder.

Best Position for Steam and Exhaust Valves.—The front and the back steam-valve chambers should be placed fair above their respective ends, and their short-port openings lead fair down to the very ends of the cylinder clearance spaces. The front and the back exhaust-valve chambers should be placed fair beneath their respective ends, and their short-port openings lead fair down from the very ends of the cylinder clearance spaces. The cylindrical surfaces of each of these rocking valves should work quite clear of the bore of the cylinder.

Steel Springs for Aiding Corliss Valves to be kept Tight.—Some makers of Corliss engines assist the steam pressure by aid of springs attached to the valve spindles with the object of still further ensuring the prevention of the leakage of steam past the valve faces.

Steam Jacket.—Provision should be made for keeping the jacket solely filled with dry hot steam when the engine is at work. It should therefore be thoroughly drained of any condensed steam by being connected at its lowest point with an efficient steam trap. This trap should empty into a pipe leading to the hot-well or boiler feed-pump suction chamber, as explained in connection with the illustrations and description of the S.S. "Inchdune's" engines (see Index).

Defects of the Farcot-Corliss Cylinder and Position of its Valves.—To inspect the interior of this cylinder or the piston from even the back end only, you have to:—(1) Disconnect the valve rods $A R_2$ and $E R_2$. (2) Disconnect the steam and the exhaust pipes $S P_2$ and $E P_2$. (3) To lift off the heavy cylinder cover C C, containing its steam and exhaust valves with their spindles, &c., without fouling the ends or faces of $S P_2$ and $E P_2$.

The port openings into the cylinder of the admission valves $A V_1$, $A V_2$ being horizontal, the pressure of the steam on the backs of these valves is not aided by their deadweights in keeping their working faces steam-tight to their ports in the same easy natural way, that they would do if their port openings led vertically downwards. Also, the valves will not be so well balanced, and there will be more tear and wear between the valves and their spindles than by the method referred to above.

Neither have springs for aiding steam-tightness of the valves been fitted to the valve-spindles, nor steam traps to the jackets of the Farcot-Corliss cylinders, as referred to above. Some engineers consider these springs superfluous; but now, no one can object to the use of the very best means of keeping the cylinder jackets as free of condensed steam as possible.

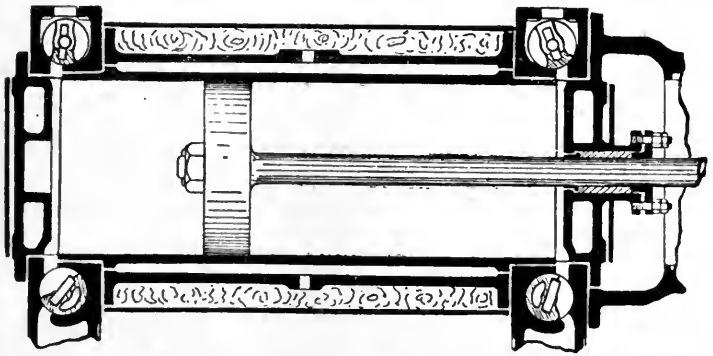

SECTIONAL VIEW OF A CORLISS CYLINDER WHICH COMPLIES WITH THE SEVERAL POINTS IN THE ABOVE CRITICISM.

LECTURE XX.—QUESTIONS.

1. What advantages are claimed for the Corliss valve gear?
2. Give sketches of a Farcot-Corliss cylinder and its valve gear, showing the positions of the steam and exhaust valves, &c. Explain how the whole arrangement is fitted and works. Point out the weak points and make a design for a cylinder to fulfil the best up-to-date requirements of a Corliss cylinder, as mentioned at the beginning and the end of this lecture.
3. Mention the different types of Corliss valve gear. Illustrate by sketches the usual shape and construction of steam and exhaust valves for this gear.
4. Describe, with the aid of sketches, the original form of Corliss trip gear. Show the simultaneous and relative movements of the wrist-plate and steam valve levers.
5. Give a general description of the connections between and movements of eccentric, wrist-plate, valves and governor in the Corliss valve gear, together with a diagrammatic centre line view of the connections, and a complete index to the parts.
6. Illustrate and describe how the tripping of the valve is effected in the Farcot-Corliss valve gear.
7. Make a sketch of the Reynolds-Corliss double-eccentric valve gear, and explain its action.
8. Describe, with sketches, how the automatic lubrication of the various parts of a large steam engine which is not encased, is now usually performed. What is regarded as the best method of lubricating the cylinder of an electric light or power station engine?
9. Describe, with sketches, any form of sight-feed cylinder lubricator for use with the Seigrist system of automatic lubrication.
10. Sketch and describe how the system of forced lubrication is effected in a quick-revolution double-acting engine. Why are the working parts of such engines surrounded by a casing?
11. Sketch some common form of steam-engine governor, and show how it may be made to regulate the speed (1) by acting on the throttle-valve, (2) by varying the point of cut-off. Contrast the functions of a governor and a flywheel as speed regulators.
12. Describe, with complete sketches, any form of steam engine governor with which you are familiar.
13. Calculate the percentage saving in lbs. of steam per B.H.P.-hour, and plot on squared paper the results obtained with the 300 B.H.P. triple-expansion Belliss-Morcom engine when using superheated steam of 160 lbs. pressure. (Use the data given in the table for this engine.)
14. Using the data given in the previously mentioned table, plot a curve, showing the change in efficiency for the dynamo-engine when run at 34 revolutions per minute for full, $\frac{3}{4}$, $\frac{1}{2}$, and $\frac{1}{4}$ loads.
15. Enumerate the several necessary precautions to be observed with superheaters and highly superheated steam.
16. Give a concise description, with sketches, of the Willans central valve engine, and note any outstanding features about this engine.
17. Calculate the percentage gain in steam for a 400-H.P. triple-expansion condensing Willans engine when using admission steam of

170 lbs. by gauge, but superheated from 0° to 180° F. Plot your results for gain in steam and for gain in B.T.U. (Refer to table of results in this lecture, and to formula with curves in Lecture XVI.)

Lecture XX.—A.M.Inst.C.E. Questions.

1. Describe any form of Corliss trip gear, with sketches showing how the trip is effected.
2. Give curves showing the total steam consumption at all loads for engines with both constant and variable cut-offs.

LECTURE XXI.

CONTENTS. — Early History of Marine Engines up to 1815 — Side Lever Engine—American Beam Engine—Steeple Engine—Double Cylinder Engine—Oscillating Engine with Valve Gear—Questions.

ALTHOUGH the successful commercial application of steam-power to the propulsion of ships was not effected until after Watt invented and perfected his double-acting engine, it will be interesting to briefly refer to a few of the more prominent attempts at steam navigation previous to and at the beginning of the present century.*

The earliest record that we can find of an actual attempt to propel a boat by a steam engine, is given in a correspondence between Papin and Leibnitz, wherein the former records having been present in 1698 at a trial of a boat driven by a Savery engine. The engine kept up a supply of water sufficient to work a water-wheel, which in turn drove the paddle-wheels. Papin, who was professor of mathematics at Marburg, had a vessel fitted with an engine of his own in 1707, wherein he employed the same device, viz., a pumping engine to force up water to turn a water-wheel attached to the propelling paddle-wheels. This vessel, however, before it had been put to regular use, was destroyed by a mob of boatmen who thought it would ruin their business. Papin himself narrowly escaped with his life and fled to England.

In 1736, Jonathan Hulls took out an English patent for a steam tug, in which the paddle-wheels were to be driven by a Newcomen's atmospheric engine, to which a system of ropes and grooved wheels, &c., was to be applied, so as to give a continuous rotary motion to the paddle-wheels placed at the stern of the tow-boat.

In 1783, the Marquis de Jouffroy, who was one of the earliest *savants* in France to recognise Watt's improvements, after several previous unsuccessful attempts, had a boat 150 feet long,

* For a complete history of the application of the steam engine to the propulsion of ships, the student is referred to Mr. Woodcroft's abridgements of patents, for marine propulsion, which will be found in most Engineers' and Philosophical Societies' Libraries, as well as to Prof. Thurston's *History of the Steam Engine.*

16 feet wide, fitted with a horizontal engine and paddle-wheels 14 feet diameter, 6 feet broad, and successfully tried it at Lyons, but owing to want of funds and discouragement from the French Government he did not put it to regular use.

In 1787, John Fitch made and tried a boat at Philadelphia, which was driven by side paddles worked by a steam engine, which attained a speed of 3 or 4 miles an hour; and in 1796 he experimented with a screw propelled boat at New York. This is the first actual trial of a screw propeller, although Daniel Bernouilli had in 1752 invented a form of screw propeller which he proposed to drive by a steam engine.

In 1788, Miller, Taylor & Symington, at Dalswinton, Dumfriesshire, Scotland, built and engined a small boat (25 feet long, 7 feet beam, with a double cylinder engine, the cylinders being only 4 inches diameter), which is reported to have attained a speed of 5 miles an hour. All these early attempts up to the beginning of the present century failed, chiefly on account of the imperfect means employed to transmit motion from the piston to the propeller. It was not until Watt's improved rotative engine began to be generally understood and appreciated that anything like practical success can be said to have been attained.

In 1801, Symington, encouraged by the previous partial success with Miller's boat, and availing himself of Watt's improvements, built and engined for Lord Dundas a small boat called the *Charlotte Dundas*, which plied as a tug-boat in 1802 on the Forth and Clyde Canal with complete success, and was only laid aside owing to the fear on the part of the canal directors that the wash from her propeller would injure the banks of their canal.

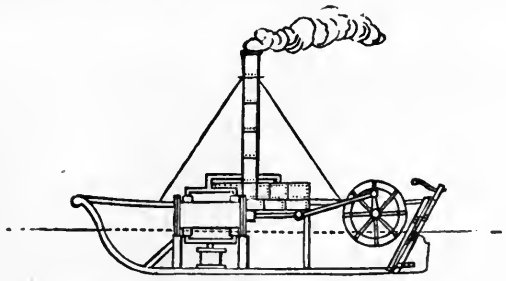

THE "CHARLOTTE DUNDAS," 1801.

As may be seen from the above figure, the vessel was fitted with a stern wheel, driven by a direct-acting horizontal engine with connecting-rod and crank. A condenser and air-pump were

fixed below the cylinder, while the boiler extended above the deck. Altogether the arrangement was most creditable, and she has justly been styled "the first practical steamboat."

In 1807, Robert Fulton, an American, had a steamer called the *Clermont* launched for him on the East River, New York, 133 feet long, 18 feet wide, and 9 feet deep, which he fitted with an engine having a cylinder 2 feet diameter, and 4 feet stroke, made for him by Boulton & Watt in England. This paddle boat made a trip to Albany, running the distance of 150 miles in 32 hours and returning in 30 without using the sails on either occasion. Old drawings, made by Fulton's own hand, of the *Clermont's* engine, are in the possession of Professor Thurston at the Stevens' Institute of Technology. The success of the *Clermont* on the trial trip was such, that Fulton soon afterwards advertised the vessel as a regular passenger boat between New York and Albany, and he has therefore the credit of first making steam navigation an every-day commercial success.

In 1812, Henry Bell constructed the *Comet* on the Clyde, a craft of 30 tons burden, 40 feet long, and 10½ feet beam, which ran for several years between Glasgow and Greenock as a regular passenger steamer.

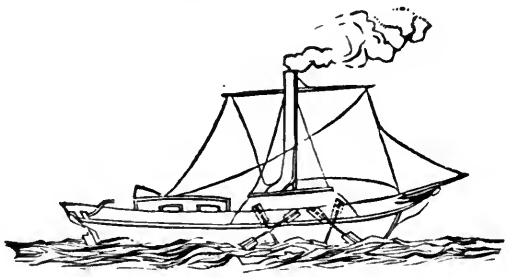

THE "COMET," 1812.

As may be seen from the above figure, there were two paddle-wheels on each side, driven by an engine rated at three horse power, of which the following diagram taken from Professor Rankine's *Steam and Steam Engine* gives an idea of its style and proportion.

This engine, as shown by the drawing, is what might be expected to have been used at the date of its construction for a small land engine, since it is fitted, not only with a fly-wheel, but also with a Watt's pendulum governor. It is a simple form of side-lever engine, where long return side rods from the

piston-rod crosshead engage with one end of a side lever, having a fulcrum or wyper shaft at its other end. With several important additions and improvements, such as jet or surface condensers, variable hand-regulated expansion gear, foot-trip and hand reversing gear, and omitting the fly-wheel and governor, this style of engine, termed a "grasshopper" engine, is to

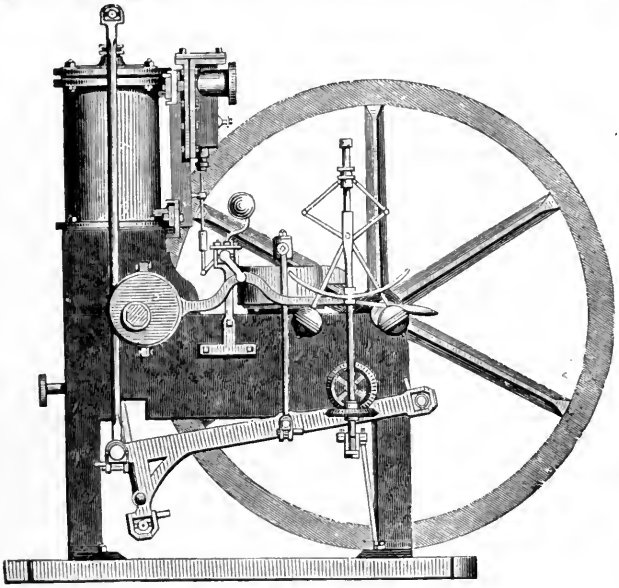

THE ENGINE OF THE "COMET."

be found at the present day doing good work in many tugs on the Thames, Clyde, Forth, and other ports. Several advantages are claimed for it, such as cheapness of construction, long stroke even in shallow water boats (where the cylinder is placed near the keel instead of on a raised platform as in the *Comet's* engine), less chance of sticking on the dead points than most other single cylinder forms of engines (owing to the position occupied by the crank shaft, the connecting-rod being placed between the cylinder side rods and the side-lever fulcrum), and also the fact, that it will work with less attention and in a greater state of disrepair than many other more finely adjusted forms of engines. The cylinder of the *Comet* is preserved as an interesting relic in the Glasgow Corporation Kelvingrove Museum.

From this date the advancement and success of steam navigation was very rapid, for we find that Bell soon built several

other steamboats. In 1814, there were 5 steamers in Great Britain (all Scotch) regularly at work in British waters; in 1820 there were 34, one-half in England, 14 in Scotland, and the rest

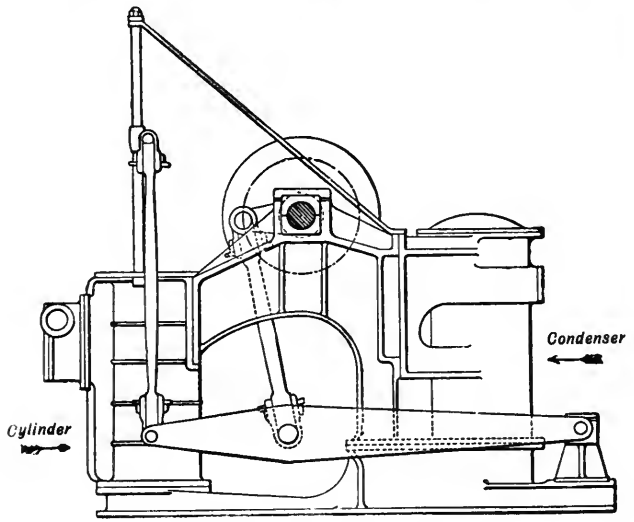

THE "GRASSHOPPER" ENGINE.

in Ireland. In 1840 there were 1,325 steam ships in Great Britain, of which 1,000 were English, and 250 Scotch. In the year 1886, there were about 7,750* registered steamers belonging to all nationalities, and in 1884 on the Clyde alone, about 300 steamers of 290,000 tons burden were launched and fitted out.

Side-Lever Engines.—In the earlier forms of engines for steamships, the propeller almost invariably used was the paddle-wheel, driven by what was known as the side-lever engine. This form of engine may be regarded as the marine counterpart of the land beam engine, so much in vogue in the early part of this century. This type of marine engine, although now entirely superseded in this country, was brought to great perfection by the Messrs. Napier of Glasgow, who fitted them to many of the most famous passenger ocean-going steamers prior to 1850.†

* 8,930 registered steamers belonging to Great Britain in 1888.

† The author remembers as late as 1866, being sent as an apprentice to assist at the repair of the engines of the old *City of London* (built and engined by Messrs. Robert Napier & Sons about 1840), which plied for

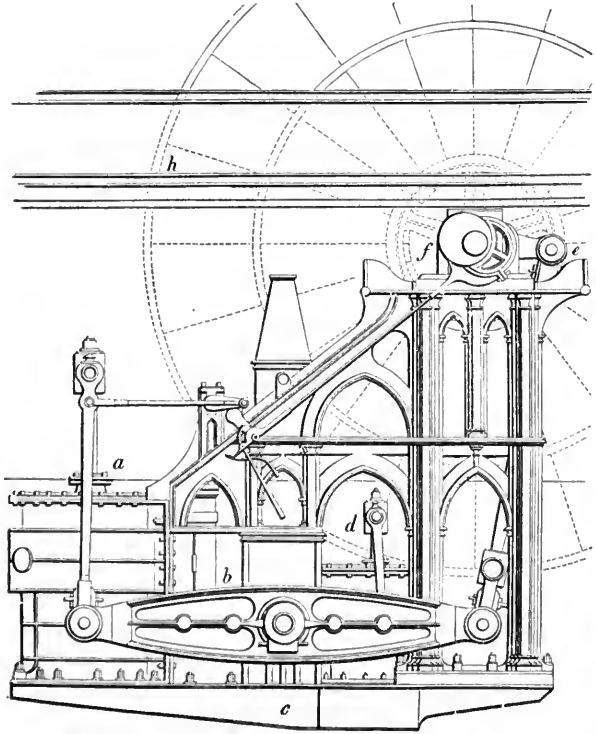

SIDE VIEW OF SIDE-LEVER MARINE ENGINES.

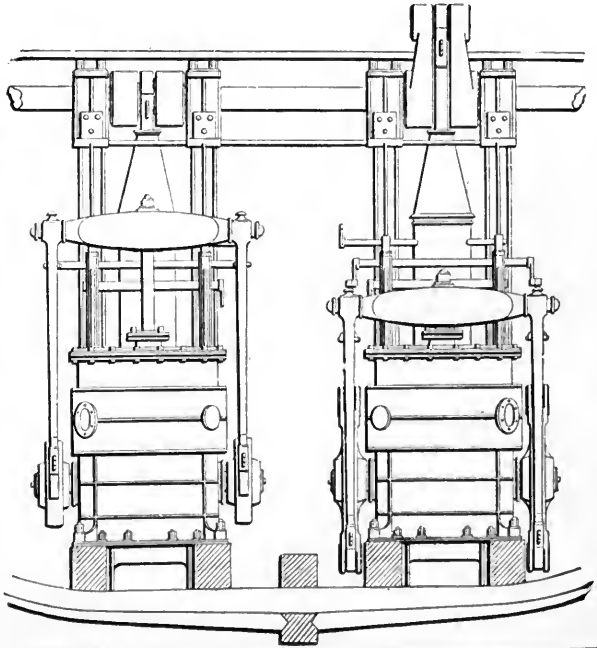

END VIEW OF SIDE-LEVER MARINE ENGINES.

The foregoing diagrams show the general arrangement of these engines :—The figure on the left hand is a side view of the port engine, while that on the right hand is an end view of the cylinders, &c., of both engines.

Each engine had a pair of side levers, *b*, fixed to one central rocking shaft, but on opposite sides of the steam cylinder, *a*. The piston-rod of the cylinder carried a crosshead like a large T (clearly seen in the end view), from which were suspended a pair of side rods, and those rods engaged with the after ends of the side levers. The other or forward ends of these side levers were connected to a single cross-tailed connecting-rod like an inverted T, thus ⊥, the upper end of which engaged the crank pin, *e*. The air-pump was also worked from the main side levers as shown at, *d*, while the jet condenser was situated between it and the cylinder. The eccentric with its counterpoise weight is seen at, *f*, and the paddle-wheel at, *h*. The whole engine rested on a heavy cast-iron girder sole plate, *c*. Such engines rarely used steam above 20 lbs. pressure on the square inch, and made about 18 revolutions per minute, or a piston speed of not more than 200 feet per minute, with a consumption of coal rarely less than 7 lbs. per indicated horse-power-hour; whereas now-a-days, a steam pressure of 150 lbs. with a piston speed of 600 feet, and a coal consumption of less than 2 lbs. are quite common. They were very heavy, occupied great space, and were often difficult to start, requiring in the larger boats sometimes two or more men at the starting wheel, for steam hydraulic starting gear, and balanced slide valves, had not been devised in those days, and only one eccentric was used, so that the slide valves had to be worked by hand until sufficient speed was attained to keep it in position for steaming either ahead or astern.

American Beam Engine.—This form of engine, which is peculiar to American river steamers, owes its characteristic design chiefly to Robert L. Stevens, the son of Colonel John Stevens, a contemporary and strong rival of Robert Fulton in shipbuilding and marine engineering at the beginning of this century. The "skeleton or walking beam" was first designed by Robert Stevens in 1822 for the *Hoboken*, and in 1827 he built the *North America*, one of the largest and most successful river steamers at that time. It attained the then extraordinary speed of between 15 and 16 miles an hour. This vessel had a pair of engines with single cylinders, each 44½ inches diameter, and 8 feet stroke,

many years between London and Aberdeen. The repair was necessitated by the breaking of one of the large side levers, *b*, a circumstance of not unfrequent occurrence with such engines. The diagrams on the last page give a good idea of her engines.

which made 24 revolutions per minute. In the vessel, he introduced for the first time, what is known in America as the "hog frame," a simple and efficient form of stiffening truss, for keeping long, light, and shallow vessels in shape when irregularly laden, and when steaming fast under the action of powerful engines.

The following figure, taken by permission from Professor Thurston's *History of the Steam Engine*, clearly illustrates the common type of American beam engine, which has been even to the present day but slightly altered in general style since it was first introduced by Stevens, except that iron and steel take the place of wood in the "gallows frame," and a higher steam pressure, sometimes as high as 60 lbs. is now used :—

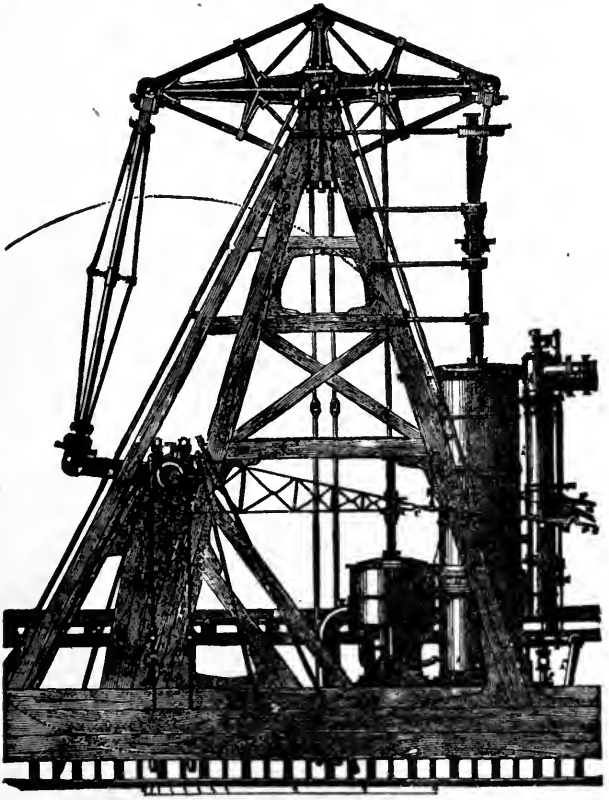

AMERICAN BEAM ENGINE.

"This class of engine is usually adopted in vessels of great length, light draught, and high speed. But one cylinder is commonly used. The piston-rod crosshead is coupled to one end of the beam by means of a pair of links, and the motion of the opposite end of the beam is transmitted to the crank by a long connecting-rod. The beam has a cast-iron centre, surrounded by a wrought-iron strap of lozenge shape, in which are forged the bosses for the end centres, or for the pins to which the connecting-rod and the links are attached. The main centre of the beam is supported by a "gallows frame" of timber, so arranged as to receive all stresses longitudinally. The crank and crank shaft are of wrought-iron. The valve gear is usually of Stevens' form, the combined invention of Robert L. and Francis B. Stevens; the steam valves being of the disk or poppet variety, rising and falling vertically, and are four in number, two steam and two exhaust valves being placed at each end of the cylinder. The condenser is placed immediately underneath the steam cylinder. The air-pump is placed close beside the former, and worked by a rod attached to the beam. Steam vessels on the Hudson River have been driven by such engines at the rate of 20 miles an hour. This form of engine is remarkable for its smoothness of working, its economy and durability, its compactness, and the latitude which it permits in the change of shape of the long flexible vessels in which it is generally used without injury by "getting out of line."

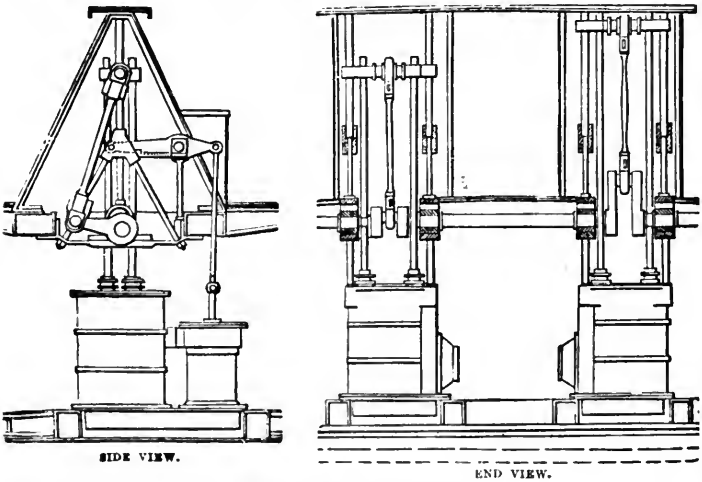

THE "STEEPLE" ENGINE.

It has, however, never found favour in this country, although several have of late been built on the Clyde by Messrs. A. & J. Inglis, of Pointhouse, for the River Plate South-American traffic. These boats had "gallows frames" of steel, but in their general features, they were similar to that shown in the illustration, p. 379.

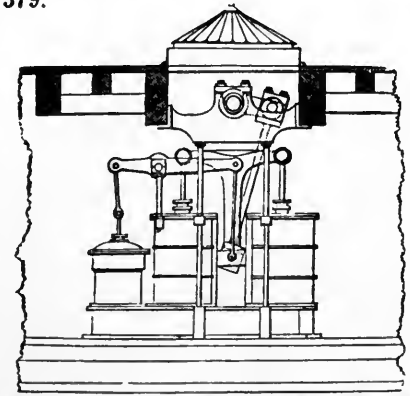

SIDE VIEW.—"DOUBLE CYLINDER" ENGINE.

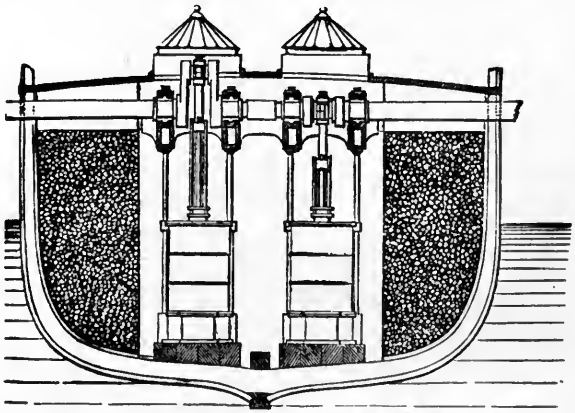

END VIEW.—"DOUBLE CYLINDER" ENGINE.

The Steeple Engine was one of the earliest forms of marine engine, and a great favourite on the Clyde for tug-boats and river steamers. It may still be seen in some of these older boats on the Clyde and elsewhere. It possesses certain advantages over the side-lever engine, for it occupies less space, and is cheaper to make, having fewer working parts; but, on the other hand, the length of the stroke is limited by the depth of the ship, and considerable vibration takes place in the overhead guides, which rear high above the cylinder in a manner which renders them not so easily stayed.

Double Cylinder Engines.—One of the first of the direct acting type of marine engines, was that known

as Maudslay's (of London) double cylinder engine, a cross section and side view of which is shown in the preceding figure.

It consisted of two equal cylinders, placed side by side, of which there were usually two sets, as shown. In order to get sufficient length of connecting rod, the piston-rods of each pair of fore and aft cylinders were connected to one crosshead of T shape, the lower end of which dipped down between vertical guides placed betwixt the cylinders, and was there attached to the lower end of the main connecting-rod. The air-pumps were worked as shown from this same point by smaller connecting-rods and levers.

Oscillating Engines.—The oscillating engine was first used as a land engine, for we find that in 1785 Murdoch, the manager of Messrs. Boulton & Watts' engineering works at Soho, Birmingham, devised a simple oscillating engine. Trevithick is also reported to have suggested this form of engine, but it remained for the well-known firms of Messrs. John Penn & Son, of Greenwich, and Messrs. Maudslay & Field, of London, to perfect and adapt it specially to paddle steamers. The general arrangement is shown by the following figures, of which the left hand one is a side view, and the right hand one an end view, taken from Professor Rankine's *Steam and Steam Engine*:—

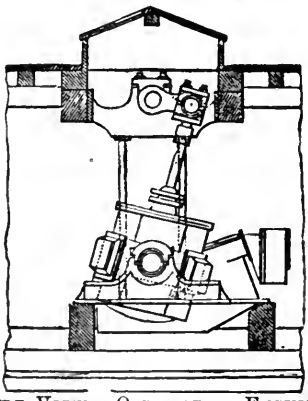

SIDE VIEW.—OSCILLATING ENGINE.

In these engines the chief feature is, that the connecting-rod is altogether dispensed with, the upper end of the piston-rod being supplied with an ordinary connecting-rod crank pin end, so as to work directly on the crank. The cylinder is usually placed vertically under the crank shaft, and is carried on two trunnions near the middle of its length, so that it may

freely sway to and fro through a small arc, and thus permit the piston and piston-rod to follow the movements of the crank. From the following sectional elevation and plan (next page) of an oscillating marine engine cylinder, C, it will be seen, that the trunnions are hollow, the one next the skin of the ship being always the steam trunnion, S T, or that one connected directly to the steam pipe leading from the boiler, while the inner or central one is the exhaust trunnion, E T, connected directly to the condenser. Both are kept steam tight with a stuffing-box and gland. There are usually two valve chests bolted to the valve faces, V F, V F, placed on opposite sides of the cylinder, and at equal distances from the centre lines of the trunnions, so as to balance each other as they oscillate with the cylinder. A steam belt surrounding the cylinder connects the steam trunnion with the valve chests, and also the exhaust port of the valve casing with the exhaust trunnion; two diaphragms as shown, are cast in this belt to prevent communication between the entering and exhausting steam, except through the action of the slide valve. The top cover, T C, with its gland, G, and stuffing-box have to be made stronger and deeper than in ordinary engines with a connecting-rod and piston-rod crosshead guide, as they have to withstand the side stress of turning and stopping

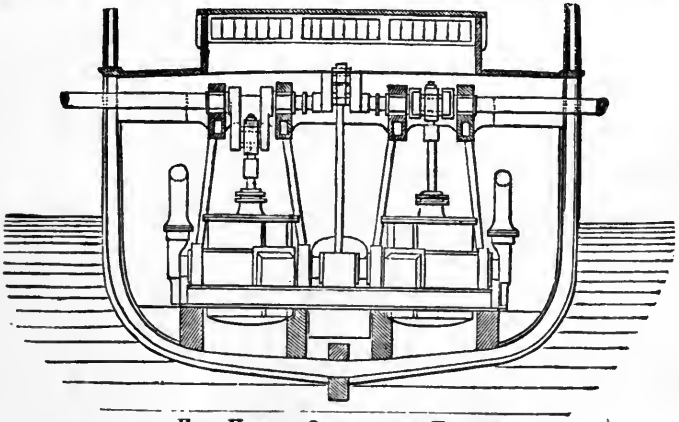

END VIEW.—OSCILLATING ENGINE.

the momentum of the cylinder, and the piston-rod has also to be made larger for the same reason. A bottom cover, B C, is provided, for the purpose of facilitating the casting and boring out of the cylinder during manufacture, or getting in to clean out or to unscrew the piston-rod nut on the bottom of the piston. The

slide valves which are generally ordinary D slides, are worked by an ingenious arrangement from eccentrics on the crank shaft, as seen by the figure on the opposite page.

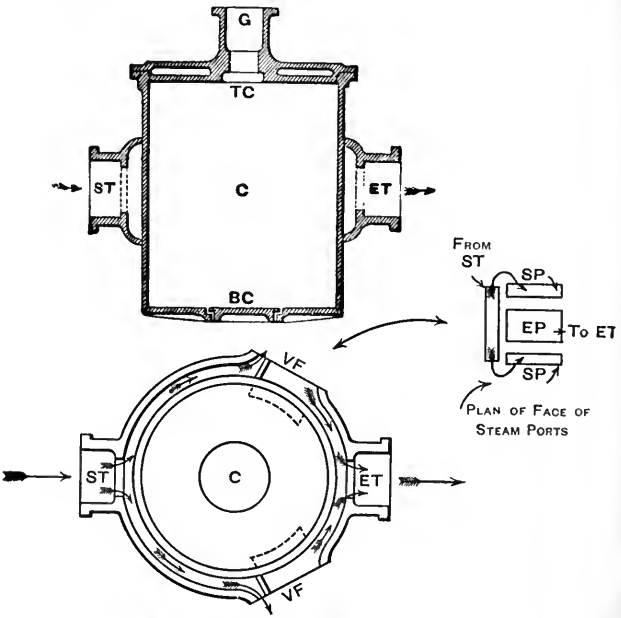

OSCILLATING CYLINDER.

Two eccentrics, E_1, E_2, generally cast and fitted on to the crank shaft, C S, in two parts, communicate an up and down motion (when one or other of them is in full or partial gear), through their eccentric rods, E_1 R, E_2 R, the link, L, and die-block, D, to a curved sector, S, moving between two vertical guides, G R. In this curved sector, S, are fitted two metal blocks, B_1, B_2, attached to the inner ends of two rocking levers, R L_1, R L_2, which transmit a simultaneous down and up motion to the cylinder valve spindles, V S_1, V S_2. The rocking levers with fulcra, F_1, F_2, are fixed to cylinder and curved round it to meet the valve spindles. The curvature of the sector is drawn with a radius from centre of trunnion. When it is required to reverse the engine, the reversing rod, R R, is moved to the right or to the left according as the engine is required to go ahead or astern, by the starting wheel, which is usually fixed on the platform on

a level with the top framing carrying the crank shaft. Either one or, if preferred, two air-pumps are worked at an angle from a central crank (shown in the end view), by means of a connect-

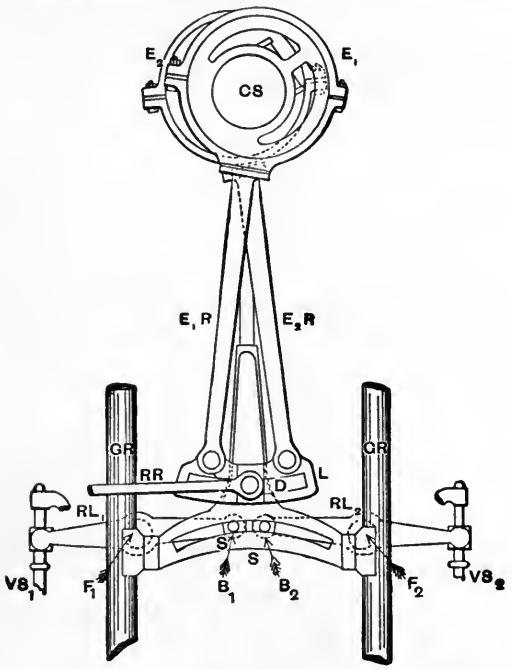

VALVE GEAR FOR OSCILLATING ENGINE.

CS	for Crank Shaft.	S	for Sector.
E_1, E_2	,, Eccentrics.	G R	,, Guide Rods.
E_1 R, E_2 R	,, Eccentric Rods.	R L_1, R L_2	,, Rocking Levers.
L	,, ,, Link.	F_1, F_2	,, ,, ,, fulcra.
R R	,, Reversing Rod.	B_1, B_2	,, Sector Blocks.
D	,, Link Die-block.	V S_1, V S_2	,, Valve Spindles.

ing-rod attached to a trunked plunger, while the condenser, if of the jet type, is placed between the cylinders, and if of the surface kind either before or behind them, but in the centre line of the ship.

Between 15 and 25 years ago, oscillating engines were by far the most popular kind of engines for fast passenger paddle wheel steamers in this country. The oscillating engine was usually worked at a steam pressure of from 30 to 35 lbs. on the square inch, and produced most economical results at that pres-

sure, having sometimes as low a consumption as $2\frac{3}{4}$ lbs. of coal per indicated horse-power-hour. Now, however, engines of the compound type, with an early cut-off and expansion valve, can be made to work much more economically than this. A general feeling exists, that the trunnions of oscillating engines will not keep tight at very high pressures, such as 100 or more lbs., although some aver that there is no great practical difficulty in this respect. The oscillating form of engine does not seem to lend itself readily to compounding, and we do not hear of so many being ordered as formerly; direct-acting diagonal engines being seemingly preferred. However, where the economy of compound engines does not show to so great advantage, such as in the case of steamers making quick, rapid, short passages, with frequent stoppages, the oscillating engine is still a favourite, for it is the most compact and direct acting type of engine we have. It is easily started and stopped, the weight of the machinery is less than in most kinds, and is well down in the hull of the ship; moreover, the stresses are transmitted to, and readily taken up by the keelson, and the ship's frames.

LECTURE XXI.—QUESTIONS.

1. Referring to the early history of steam navigation previous to the beginning of this century, point out the chief causes of failure of early inventors.
2. Give an outline free-hand sketch of a "side-lever engine," with index of parts, using the first letters of the names of the parts, and state why this type of engine was given up, and when.
3. Give an outline sketch, with index of parts, of the "American beam engine," and state the advantages claimed for it, which will account for its retention, even to the present date, by the Americans. What is the "hog frame," and of what use is it? Have you ever seen it or the beam marine engine applied in this country? If so, where?
4. Sketch in outline a "steeple engine" and a "double cylinder engine," with indices of the chief parts.
5. Sketch in outline a Grasshopper engine, and give an index of the chief parts. State the advantages claimed for this form of engine, and the kind of steamer for which it is best adapted. Have you ever seen an engine of this kind at work, and where?
6. Describe an eccentric and eccentric rod as fitted to marine engines, and show that they produce the same motion as a crank and connecting-rod. How is the eccentric connected with the slide valve in an oscillating engine? Give sketches and index of parts.
7. Describe the construction of the cylinder of an oscillating engine. Make a diagram showing how the slide valves are worked by the eccentrics as well as the steam and exhaust passages.
8. Describe, with sketches, the construction and arrangement of the cylinder, steam ports, and passages, together with the slide valve of a marine oscillating engine, and show the manner in which the valve gear is adapted to the oscillating cylinder.
9. Describe, with sketches, the construction of an oscillating engine, and the method of distributing the steam.

CONTINUATION OF LECTURE XXI.

(HISTORY OF MARINE ENGINES.)

CONTENTS.—Diagonal Direct-Acting Engines, with Joy's Valve Gear and Alley's Flexible Coupling, etc.—Paddle-Wheels—Radial Paddle-Wheel —Feathering Paddle-Wheels—Questions.

Diagonal Direct-Acting Engines.—This form of engine is very convenient, and is now the most popular for fast paddle-wheel river steamers of light draught. As will be seen from the illustrations which we give, it is neither more nor less than a horizontal engine set at such an angle, that the forward end is elevated to suit the necessary height of the paddle shaft, while the after end rests firmly on the ship's floor frames. It no doubt takes up a larger fore and aft space than the oscillating type, but, on the other hand, it occupies less space athwart-ship, and when the framing is carefully designed, using wrought-iron and steel wherever possible (instead of the older style of cast-iron framing), the weight per horse-power does not in all probability exceed that of its chief rival the oscillating engine. The weight is also better distributed along the keel of the ship, and the stresses set up by its action are chiefly in a fore and aft and downward direction, and, therefore, easily resisted by the natural structure of the vessel. Moreover, the chief working parts are in full view of the engineer while at the starting wheel, the engine is readily got at for adjustment and repairs, easily compounded, and all the most modern and efficient devices for quickly starting, stopping, and reversing, or for economising steam are easily applied to it. We illustrate one of these diagonal direct-acting engines made (1885) by Messrs. Alley & Maclellan, Sentinel Works, Glasgow, for steamers trading on some of the large rivers in India.

By studying the two figures, along with the index of parts, the student will be able to get a minute idea of the general arrangement of boilers and engines, but, in order that he may the better grasp the construction of the engines, we illustrate a perspective view of them as they lay in the workshop before being removed and fitted into the steamers. It will be observed that they are

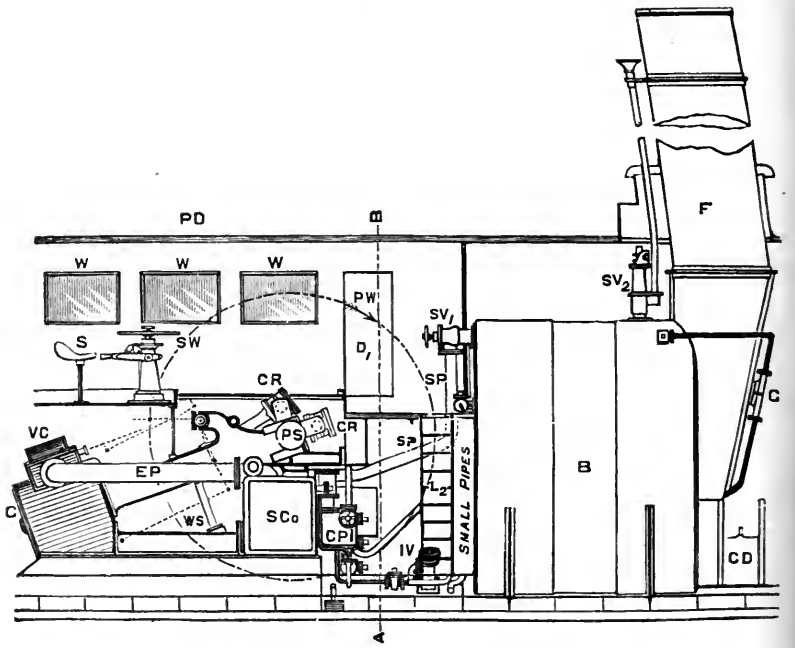

General Longitudinal Arrangement.

Diagonal Compound Engine and Boiler.

compound condensing engines, and are fitted with Joy's valve gear and Alley's flexible main shaft coupling.

In *Joy's Valve Gear* the necessary motion of the slide valve, and the facility for reversing the engine, are effected by a series of links and connections between the connecting-rod and the valve spindle, thus replacing the ordinary double eccentrics and Stephenson's link-motion. This valve gear is an example of a radial valve gear, of which Hackworth's was the earliest form. See pp. 461 and 509 for other forms. The motion obtained by it is a very good one for a slide valve, for the travel of the valve is made quick on opening and on shutting off steam to the cylinder, and slow when the steam is expanding and exhausting. This is effected without any undue lead or com-

pression, or too early an exhaust. The space usually occupied by eccentrics on the crank shaft is saved, and thus the cylinders and the cranks, as well as the main bearings, can be brought much closer together.

At a joint, J, on the connecting-rod, C R, is attached a double link, $L_1 L_1$, about $\frac{1}{3}$ along this double link is attached a pair of

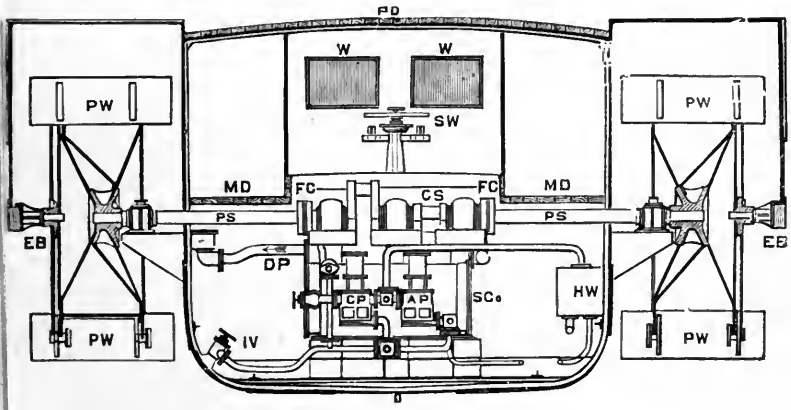

CROSS-SECTION THROUGH LINE A...B ON OTHER VIEW.

DIAGONAL COMPOUND ENGINES AND BOILER.

Index to Both Views.

PD	for Promenade deck.	EP	for Exhaust pipe.
MD	,, Main deck.	WS	,, Wrought-iron stanchion.
CD	,, Coal (bunker) door.	SCo	,, Surface condenser.
B	,, Boiler.	CP	,, Circulating pump.
F	,, Funnel.	IV	,, ,, inlet valve.
G	,, Gauge pipe to indicate height of water.	DP	,, ,, discharge pipe.
SV_2	,, Safety valves.	AP	,, Air-pump.
SV_1	,, Stop valve.	HW	,, Hot-well.
SP	,, Steam pipe.	CR, CR	,, Connecting-rods.
D_1,	,, Door to engine room	CS	,, Crank shaft.
W, W,	,, Windows ,,	FC, FC	,, Flexible couplings.
L_2	,, Ladder ,,	PS, PS	,, Paddle shafts.
S	,, Seat for Engineer.	PW	,, Paddle-wheel.
SW	,, Starting wheel.	EB, EB	,, Outer eccentric bearings for feathering floats.
VC	,, Valve casing.		
C	,, Cylinder, low pressure.		

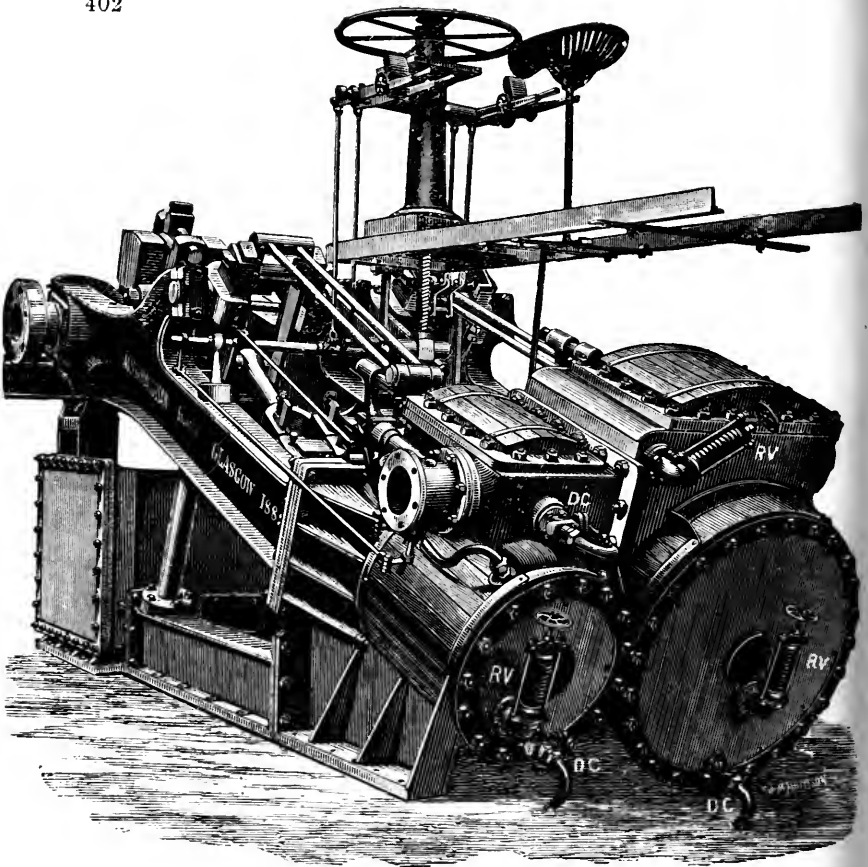

ALLEY AND MACLELLAN'S COMPOUND DIAGONAL ENGINES.

DIMENSIONS OF COMPOUND DIAGONAL ENGINES, &c.

STEAMER.	ONE BOILER (STEEL).	ENGINES.
Builders' measurement = 222 tons	Diameter . . = 11 ft. 6 in.	Diameter H.P. cyl. = 22 in.
Length . . = 140 feet.	Length . . = 9 ft. 6 in.	,, L.P. cyl. = 37½ in.
Beam . . = 18 feet.	Thickness of shell = $\frac{13}{16}$ in.	Length of Stroke = 30 in.
Depth of hold . = 7 ft. 6 in.	Furnaces . . = Two.	No. of strokes per min. = 44
Speed . . = 14½ kts.	Tubes . . . = 192	Cut off in each cyl. = 15 in.
Weight of Engines = 22 tons.	,, Diameter = 3¼ in. O.D.	Indicated Horse-Power = 300.
,, Boilers in working trim = 23 tons.	Grate surface . = 33 sq. ft.	Diameter of Paddles = 12 ft.
	Total heating surface = 1298 sq. ft.	Breadth . . . = 6 ft.
	Pressure . . = 100 lbs.	Immersion . . = 2 ft. 3 in.

links, L_2, the upper ends of these being coupled first to sliding blocks, S B (working in curved guides, C G), and the extreme end to the valve connecting-rod, V R, which terminates at and is fixed to the valve spindle, V S, with its accompanying

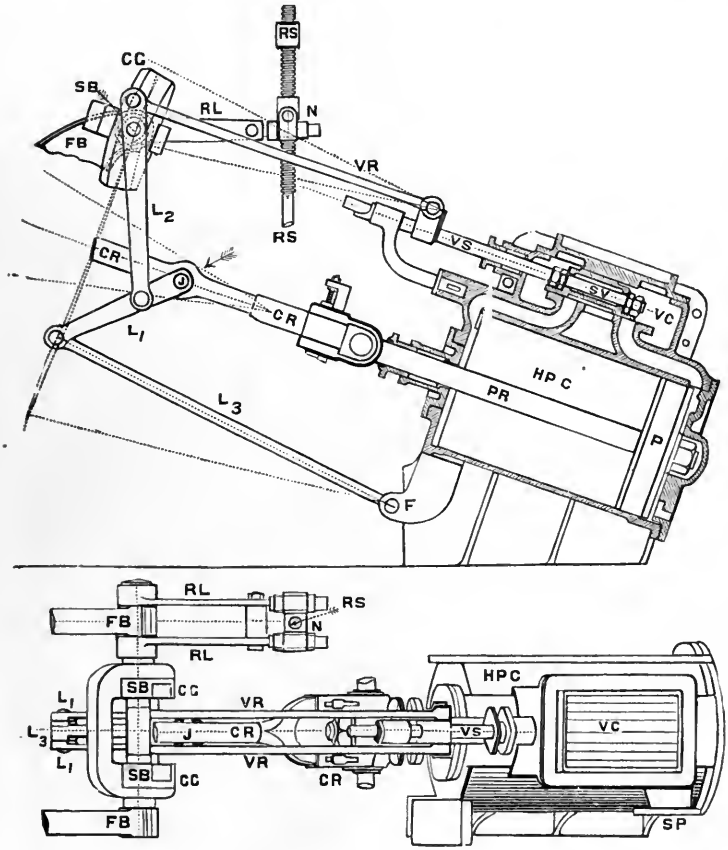

Joy's Valve Gear.

slide valve, S V. The lower end of the double links, L_1 L_1, is connected to a radial rod or link, L_3, terminating in a fulcrum, F, fixed to a bracket on the high-pressure cylinder, H P C,

wherein is shown the piston, P, and piston-rod, P R. Precisely the same arrangement is carried out with respect to the low-pressure cylinder and slide valve. The double (curved) guide, C G, is free to move to the right or to the left in bearings carried by the main framing brackets, F B (see also the perspective and general views of the engine). The reversing or starting wheel, S W, is keyed at the upper end of the reversing screw, R S, which screw has a nut, N, fixed to the reversing levers, R L.

It will thus be seen, that the combined to-and-fro, up-and-down motion of the connecting-rod, is converted and transmitted to the valve spindle, in the form of a merely to-and-fro motion. The eccentricity of the connecting-rod's motion being duly corrected by the relative positions and lengths of the several links, L_1, L_2, L_3, &c., and that by elevating the nut, N, by the reversing screw, R S, the curved guides, C G, are turned backwards or from the cylinder; this action draws forward the valve rod with valve spindle and slide valve, admitting steam behind the piston, and causing the engine to move forward, or in other words putting it in forward gear, while the depressing of the nut, N, effects precisely the opposite, and causes the engine to revolve backwards. All the joints are made very substantial and should be case-hardened, while their pins should be of steel to prevent wear and obviate rattling.

Alley's Flexible Coupling.—The engines being described were fitted with this device, which allows the paddle shaft to

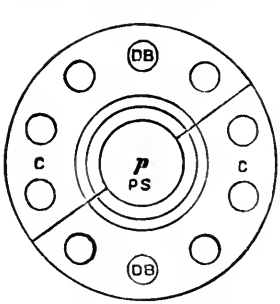

FACE OF COUPLING.

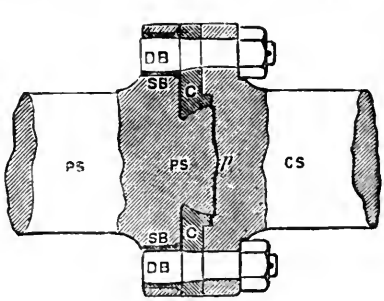

LONGITUDINAL SECTION.

accommodate itself to the yielding of the paddle boxes and the hull of the vessel as it vibrates and changes form when working in a sea-way. It is equally applicable to the shafting of screw steamers. The hull of a vessel cannot be made absolutely rigid, and therefore it is wrong to make the shaft rigid. With

a rigid shaft and a flexible hull the result is an enormous amount of friction in the bearings, which consumes power, and often causes the bearings "to fire." Scarcely a month passes that we do not hear of some steamer breaking a main shaft, often to the danger of life and property, and this in many instances may be traced to a want of trueness in the line of the bearings, due to the vessel having warped from uneven stowage, or from having encountered heavy weather.

The coupling consists of a projection formed on the end of the paddle shaft, P S, which is part of a ball, the centre of this projection being formed into a blunt point at, *p*. This point rests hard against the crank shaft, C S, and transmits any thrust along the line of shafting. The outside of the projection is clasped by the coupling ring, C, turned to fit the ball joint. This ring, C, is made in halves (as may be seen by the end view), and is secured to the crank shaft by means of the driving bolts, D B. The concave portion of this ring takes any pull that may come on the shaft along the line of shafting. The ends of the driving bolts, D B, project as shown into holes in the paddle shaft, P S, and thus act as drivers. These projecting pins are made 2½ times the diameter of the bolts usually employed for main-shaft coupling flanges. These pins are slightly barrel-shaped in form, and made an easy fit for the holes in which they work. The holes are lined with hard steel bushes, S B, while the pins are case-hardened to prevent chafing and wearing away. It will be observed that there is a small space left clear between the paddle shaft flange and the coupling ring, C, to permit of perfect up and down or side play, or un-linement between the crank and paddle shafts for the reasons already mentioned.

Relief Valves.—On referring to the perspective view of the engines, it will be seen that relief valves, R V, are fitted not only to the front and back of the high- and low-pressure cylinders, but also to the back of the low-pressure slide valve casing, for the purpose of preventing damage to these parts through water gathering in them. These relief valves consist of ordinary mushroom valves, held down by strong spiral springs, and adjusted to any desired pressure by hand wheels and screws, as shown.

Drain Cocks, D C, are fitted to the back of the high-pressure slide valve casing, and to the bottoms of both cylinders. The pipes leading from them are all connected to the condenser. These cocks are opened before starting the engines, so as to clear away any water that may have resulted from condensation of steam, and also when the engines have to be stopped for any length of time.

Paddle-Wheels.—Having briefly described the different forms of engines used for driving paddle-wheels, we now naturally refer to the wheels themselves, leaving a description of the screw propeller until after we have noticed the styles of engines more particularly adapted to driving it.

The efficiency of the paddle-wheel falls off when the wheel is too deeply immersed, so that if used for long voyages, where the draught of the vessel decreases as it proceeds, due to consumption of coal, etc., if the wheels are to be immersed to the proper depth at the end of the voyage, they must of necessity be too deep at the beginning. This variable immersion of paddle-wheels is the most serious objection to their use for long voyages. Also, in a heavy sea the *rolling* of the vessel, besides causing the engines to race, induces unequal straining of the machinery, since one wheel lifts out of the water, while the other sinks more deeply in it. Neither of these disadvantages is found in the screw propeller, for the screw is immersed considerably below the surface of the water, and since it is placed in the centre line of the ship, the rolling motion has no effect on it. The heaving of the ship in a fore and aft direction causes racing of the engines, but no unequal straining is set up. Paddle-wheel steamers are still built for shallow-river work. The vibration set up by the motion of paddle engines is not so great as that from the faster-running engines necessary for the screw propeller.

Radial Paddle-Wheel.—This form of wheel is the simplest, strongest, least expensive, and least liable to derangement, but is also unfortunately the *least efficient*. It consists of radial arms, which are attached to a cast-iron boss at the centre, and are bound at their outer extremities by one or two wrought-iron rings. Flat boards are fixed rigidly to these radial arms, parallel to the axis of the wheel, and are known as "floats," and it is the thrust or push which these boards or floats exercise upon the water as the wheel rotates, which propels the vessel. The floats of a wheel of this kind, of necessity enter and leave the water in an oblique manner, and are only perpendicular to the surface of the water when they come immediately below the centre of the wheel. Therefore, since the pressure which a float produces is perpendicular to its surface (*i.e.*, perpendicular to the radius of the wheel), it is only when the floats are passing their lowest point, that the *whole* pressure they exert is utilised in propelling the vessel; in all other positions, it is only the

horizontal component of the pressure which exercises any propelling effect, and the greater the obliquity of action, the less is this horizontal component. A large proportion of the power spent in driving paddle-wheels of this form, is wasted in beating and churning the water with the floats, when these are in positions on either side of the vertical line through the centre. The deeper the immersion of the radial paddle-wheel, and the smaller its diameter for a given depth of immersion, the greater is the obliquity of action, and therefore the greater is the loss of efficiency.

Radial wheels are sometimes made in such a way that the floats can be quickly detached and fixed in positions nearer the centre of the wheel. This is advantageous, when from an increased load, the draught of the vessel becomes greater, thus causing greater immersion of the paddle-wheels, since then the diameter of the wheel is reduced, and thus by reducing the immersion of the floats, diminishes the loss from oblique action. This operation is known as *reefing* the paddle-wheels.

Radial wheels, double the diameter of feathering ones, are about equal in efficiency, but then the engine is quite twice as heavy.

Feathering Paddle-Wheels.—This form of paddle-wheel, as illustrated, is designed with the object of getting rid of the disadvantages which arise from the obliquity of action of the radial wheel.

The floats are not fixed rigidly to the radial arms, but are hinged to them, and are provided with levers, G L, so that they may be turned into any position. These levers are connected by rods to a boss or eccentric strap, E, which rotates on a central fixed pin on the sponson beam. This central pin is so placed in relation to the centre of the wheel, that the floats enter the water edgewise, and when in the water, are kept by the levers in a position nearly perpendicular to its surface. The radial arms of the paddle-wheel, F, are forged with small brackets on them at right angles to their lengths, so as to receive the round pins about which the floats hinge.

To find the position of the eccentric pin in order that the floats may enter the water edgewise, and pass through it nearly perpendicular to its surface, the following simple construction is necessary:—Suppose the lower edge, P, of a float to be just entering the water, then, in order that the float may enter edgewise, the resultant of its own velocity of rotation and the horizontal velocity of the vessel, must lie in the plane of the float. Let, P A, represent the velocity of the vessel, and, P B, that of

the wheel (drawn tangential to a circle which has, C, as centre, and passes through, P), then, completing the parallelogram, P R

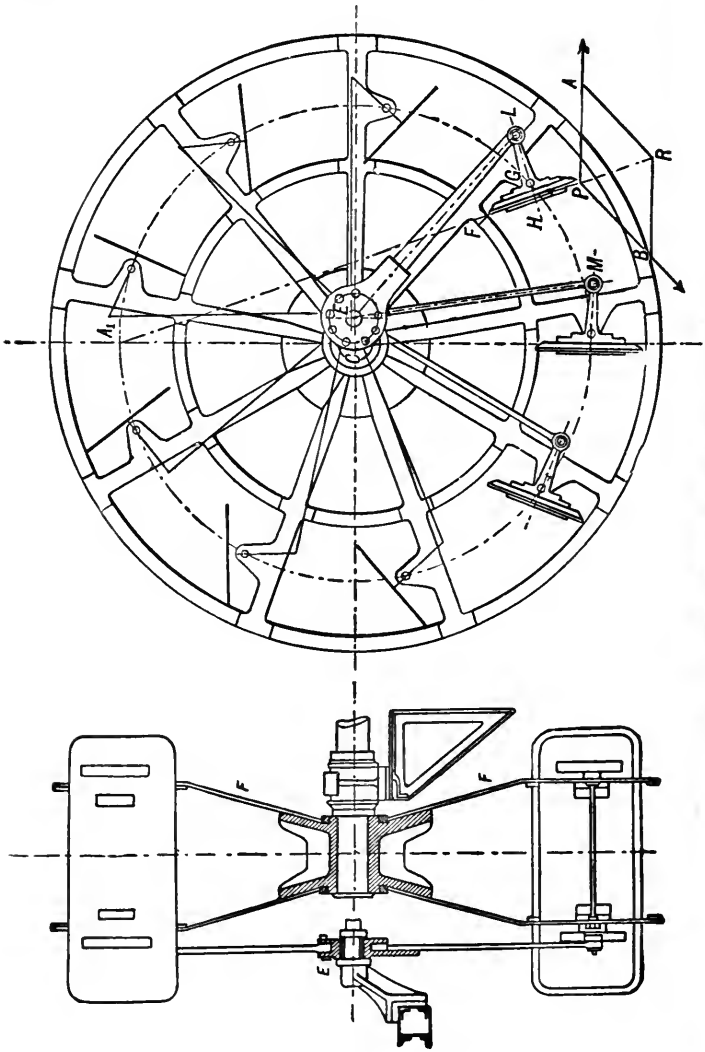

PADDLE-WHEEL WITH FEATHERING FLOATS.

is the resultant, and the plane of the float must contain P R. Produce, R P, to cut the vertical through the centre, C, at, A_1, and at right angles to the line, R A_1 (which is the line of the float); lay off, H G, equal to the distance from the face of the float to the centre of the hinge, and, G L, equal to the length of the lever. Now set off in outline another float immediately under the centre of the wheel, with its face perpendicular to the surface of the water, and having the end of its lever at M. With, M, and, L, as centres, and radius equal to, G C, describe arcs intersecting at, E, then, E, is the centre of the eccentric pin. Having thus determined the position of, E, the complete wheel may be drawn down and the proper pitch given to the floats. In actual practice the probable slip of the paddle-wheel has to be taken into account, and, therefore, a smaller circle than that with radius, C G, will be the rolling circle. The floats must, therefore, be so adjusted by moving the eccentric, E, that when entering and leaving the water they shall point to a position on the vertical centre line, considerably higher than the point, A_1, as shown by the right-hand figure. It is, however, advisable to make the floats enter the water a little flatter than the position so calculated for the assumed amount of slips, in order that the pressure of the water shall not come on the forward side of the floats. The speed of the paddle-wheel and of the ship should be carefully compared on the trial trips, and the eccentric shifted, if need be, until the best results are obtained. A considerable increase of speed of certain ships has been recorded by thus finding the most suitable place for the feather ing eccentric.

The feathering paddle-wheel, although much more efficient than the radial wheel, is more liable to derangement, since any accident to the feathering apparatus would paralyse the action of the entire wheel. For this reason it did not find general favour when first introduced, but now it is almost universally adopted. It requires to be made specially strong, and all the pins and wearing parts should be cased with brass to prevent corrosion. The boss or eccentric, E, which carries all the rods for feathering the floats, runs loose on the fixed eccentric pin, and is turned round by one specially strong rod, known as the *driving* or *king rod*, shown at L E. The floats for large paddle-wheels are now frequently made of steel and curved slightly concave,)—→ towards the direction of meeting the water when steaming ahead.

Lecture XXI.—Questions (*Continued*).

1. Sketch and describe by an index of parts a side and an end view of the general arrangement of diagonal direct-acting engines, as fitted into a river passenger steamer, including the boiler.

2. Why are compound-diagonal direct-acting engines preferred to oscillating or other kinds of engines for shallow river paddle-wheel steamers?

3. Sketch and describe by an index of parts, side views and a plan of a compound direct-acting diagonal engine.

4. Sketch and describe by an index of parts, Joy's valve gear, pointing out its advantages and disadvantages as compared with eccentrics and link-motion.

5. Steamer main shafts often break, or their bearings give trouble by heating, account for this, and describe a plan or plans for alleviating this evil.

6. Sketch and describe a simple radial paddle-wheel. For what reasons has this form of wheel been abandoned?

7. Sketch and describe, by an index of parts, a modern feathering float paddle-wheel. What advantages has it over the older form of paddle-wheel?

8. Describe how you would design and construct the arms, floats, and feathering arrangements for a paddle-wheel.

9. Describe, with such sketches as you think necessary, some method of constructing a paddle wheel with feathering floats. Why has Buchanan's method, of causing the floats to dip into the water vertically, not been adopted in practice?

CONTINUATION OF LECTURE XXI.

CONTENTS.—Early Invention of the Screw Propeller—Geared Engines—Penn's Trunk Engine—Maudslay's Return Connecting-rod Engine—Horizontal Direct-Acting Engine—Vertical Direct-Acting Engines—Questions.

Early Invention of the Screw Propeller.—As we remarked before, when reviewing the early history of the marine engine prior to the beginning of this century, Daniel Bernouilli invented in 1752 a screw propeller which he proposed to drive by a steam engine, and John Fitch experimented with a little screw steamboat on the "Collect" Pond, New York, in 1796. In 1804, Colonel John Stevens of Hoboken, America, completed a steamboat 68 feet long, and 14 feet beam, which he fitted with a water tubular boiler, and a direct-acting high-pressure condensing engine, having a 10-inch cylinder of 2 feet stroke, driving a screw with 4 blades, and of a form which even at the present day appears quite good.*

A model of his boiler, engine, and screw, is preserved in the Mechanical Engineering Lecture Room, at the Stevens' Institute of Technology. In 1805, Stevens built another boat, introducing twin screws. Several other engineers proposed, and some of them tried, screw propulsion, but it was not brought into general use until John Ericsson, a Swedish engineer residing in England, and E. P. Smith, an English farmer, perfected and pushed its introduction in Great Britain, and in America, in 1836-37.

Geared Engines.—Within a few years from this date, the style and speed of steamship engines became entirely altered from what had been used in connection with the paddle-wheel; yet, engineers naturally tried at first to adapt the then existing forms of paddle-wheel engines to drive the screw. The screw has, however, to be run at many more revolutions per minute than the paddle-wheel, and since engineers in those days regarded anything over 200 feet per minute of piston speed as dangerous, or likely to derange their machinery, they preferred to get up the necessary speed by gearing. Thus, beam, side-lever, oscillating, and some of the various other forms of engines already mentioned in Lecture XX., were made to do duty in driving the screw propeller by means of stepped cog-wheels. Shortly after the successful commercial introduction of the screw as a propeller for

* See Prof. Thurston's *History of the Steam Engine*.

merchant ships, the Admiralty were induced to build two ships of the same model and size, viz., the *Rattler* and the *Alecto*, fitted with engines of the same power, but the former was provided with a screw, and the latter with paddle-wheels. A series of competitive trials were made with these two vessels, and the great success of the *Rattler* so satisfied the Admiralty and all engineers of the advantages possessed by the screw, that it very soon came to be generally adopted for ocean-going steamers. By gradual steps and improvements in the arrangement, and construction of the machinery, direct-acting fast-speed engines were adopted, until nowadays a piston speed of 700 feet per minute is not uncommon.

We now propose to briefly notice a few of the most successful styles of screw-driving engines before explaining the screw itself.

Penn's Trunk Engine.—The difficulty of obtaining a sufficiently long stroke from the direct-acting horizontal engine in the case of a man-of-war, where the engines had to be placed as near the keel of the ship as possible, was solved by Mr. John Penn of

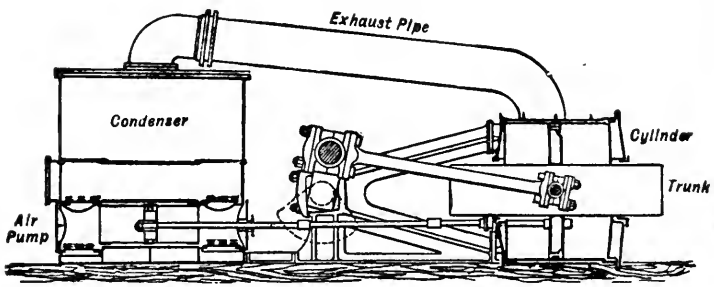

Greenwich. He hinged the connecting-rod direct to the centre of the piston by means of a gudgeon, surrounded by a brass cylindrical case or trunk, concentric with the steam cylinder, as seen in the following figure. This trunk was fixed to the piston, and protruded from each end of the cylinder through stuffing boxes, thereby not only giving additional support to the piston, but also permitting access for oiling the gudgeon and connecting-rod end, and preserving an equal area to the pressure of the steam on both sides of the piston.

Seaton, in his *Manual of Marine Engineering*, says—"This engine is the lightest and most compact of all the forms of marine screw engines, when constructed of the same materials;

and for large sizes with the *lower steam pressures*, has been unsurpassed by any other type of engine. The length of stroke is considerably more than that of the ordinary direct-acting engine, and the connecting-rod much longer than that of any other form, being from two and a half to three times the length of the stroke; the weight of the piston is taken by the trunks in a great measure, and there are no piston-rod guides. But with the increase of pressure the defects of this form become more apparent, and lie with the very part that distinguishes it—viz., the trunk.

"The friction of the large stuffing-boxes is very great; in fact, may be so great by unduly tightening the glands as to stop the engine. The loss of heat from the large surface of the trunks being alternately exposed to steam and to the atmosphere, is very great, as is also that from their inner surfaces. The gudgeon brasses are exposed to a very high temperature and liable to become heated, and when heated cannot easily be cooled, as from their position they are not readily adjusted."

Penn arranged his engine so that the direction of motion of its crank when going ahead caused the thrust of the connecting-rod to be upward, and thus, as far as possible, to relieve the bottom of the cylinder from the tear and wear due to the weight of the piston.

Maudslay's Return Connecting-Rod Engine.—Another modification of the horizontal engine, or rather of the old steeple

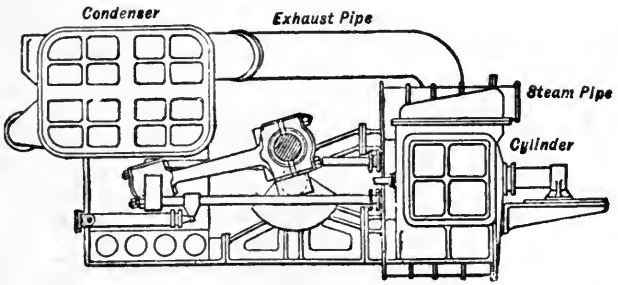

form, is that known as the return connecting-rod, by which the same object is attained as in the last type—viz., a sufficiently long stroke and connecting-rod in the narrow cramped space of the hold of a vessel. The general arrangement will be at once understood from the preceding figure.

By the above design, the cylinder may be got close up to the

turning range of the crank pin and connecting-rod head, that a longer stroke is obtainable than by any other plan of horizontal engine arrangements. The difficulty in small engines of getting in a small high-pressure cylinder alongside of the larger low-pressure one (with the object of compounding the engines), owing to the necessity for two piston-rods from each cylinder clearing the crank shaft, is overcome in most instances by placing the high-pressure cylinders immediately behind the low-pressure ones—tandem fashion—with one piston-rod only, protruding from behind each of the low-pressure cylinders, and attached to the high-pressure piston. The chief objections urged against the form of engine are—(1) The double piston-rods from the front ends of both cylinders; this entails double the number of stuffing-boxes, and the keeping of the crank shaft bearings from being close to the crank arms. (2) The eccentric-rods are also of necessity very short, unless placed, as is sometimes done, on the same side as the connecting-rod. The first engines of H.M.S. *Monarch* and *Raleigh* were of this type, and had four piston-rods to each cylinder.

Horizontal Direct-Acting Engine.—This form of engine having its connecting-rod directly between the piston-rod crosshead (on the cylinder side) and the crank is certainly the simplest and most convenient type for a vessel, where sufficient room can be obtained.

They have the same essential parts, and work on the same principle as the compound inverted-cylinder engines which we shall describe in Lecture XXIII.; and we only omit explaining and illustrating their distinctive features and details from want of time, space, and diagrams at our disposal.

Vertical Direct-Acting Engines.—One of the simplest forms of marine engine used for small tug-boats and for steam launches is that of the compound inverted-cylinder non-condensing type. The following illustration shows the general arrangement of one of a pair of these small engines manufactured by Messrs. Alexr. Shanks & Son, of Arbroath; from which it will be seen, that the high and low-pressure cylinders are supported at the back upon two cast-iron columns, and at the front by two wrought-iron stanchions. All four supports are fixed to a strong cast-iron sole-plate, which is bolted to the ship's floors. The back columns form the guides for the crossheads of the piston-rods. The valve casings are placed on the fore and aft ends of the cylinders, which admits of the slide valves being readily inspected and adjusted. The slide valves are worked and reversed by the ordinary double

eccentrics with link-motion. A boiler feed-pump is worked from one end of the crank shaft, and a bilge-pump from the other end, both being driven by eccentrics, etc., as shown. The whole of the outside moving parts are easily got at for oiling and for adjustment, and all wearing parts are arranged so that the wear and tear may be readily taken up. It will be observed that the

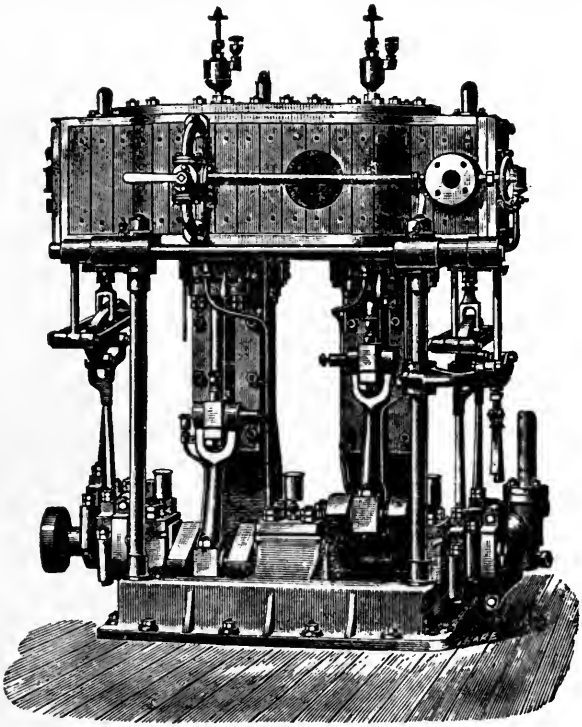

SHANK'S COMPOUND NON-CONDENSING ENGINE.

upper ends of both connecting-rods are provided with projecting pins on their inner ends. This is for the purpose of working air and circulating pumps by means of levers, should it be found desirable to work the engines as condensing engines; in which case, a surface-condenser is placed separate from them in some convenient corner of the engine-room. The speed of these engines varies from 230 to 300 revolutions per minute.

Modern Marine Steam Engines.—For sea-going steamships which are not turbine-driven, the inverted-vertical engine is now in almost universal use for naval and mercantile purposes. Three cranks using triple expansion are commonly employed, but even when triple expansion is retained there is a tendency to prefer four cranks; in this case the last stage in the expansion is divided between two cylinders, which are usually of the same size. This has the double advantage of enabling better balance to be obtained and of avoiding a large cylinder with its consequent structural difficulties in the design.

When three cranks are employed, they are usually arranged at 120° apart, and in some large engines provided with three cranks there have been employed five cylinders, two high-pressure cylinders being arranged in tandem over two low-pressure cylinders, while the intermediate-pressure cylinder is arranged over the third crank. The normal type in modern practice comprises four cranks without tandem cylinders, the expansion being triple or quadruple.

Quadruple-expansion engines with four cranks have sometimes six cylinders for large horse-powers, the first and last stages being each divided between two cylinders arranged in tandem.

Slide-valves of the piston form are used in most marine engines, except for the low-pressure, for which the double-ported flat type is more common; they are placed as a rule between the cylinders. The air pump is commonly driven from one of the cross-heads of the engine, but the tendency with large engines is to make the air pump an independent unit; this applies also to the other pumps. Forced lubrication in the crank pin, eccentrics and main bearings is common (see also Chap. XXIII.).

LECTURE XXI. (*Continued*).—QUESTIONS.

1. On the introduction of the screw as a ship's propeller geared engines were at first adopted, why? What advantages have direct-acting over geared engines?

2. Sketch a section, through the cylinder, air-pump, and condenser of Penn's trunk engine. Describe generally the arrangement of the engine, and show the connection of the piston with the screw shaft. Why is this style of engine being discontinued in the Navy?

3. Describe, with a sectional sketch, Maudslay's return connecting-rod engine, and point out its advantages and disadvantages. In what class of ships are Maudslay's and Penn's horizontal engines used, and why?

4. What style and arrangement of engine is now being chiefly ordered by our Admiralty, and why?

5. How would you arrange the cylinders for compounding a pair of simple condensing Maudslay's return connecting-rod engines?

6. Give a general outline freehand sketch, with concise description, of a pair of inverted-cylinder compound non-condensing engines. For what classes of ships is this style of engine suitable, and why?

7. Sketch and describe an escape valve as fitted to the cylinder of a marine engine. Why is such a valve required, and where is it placed?

LECTURE XXII.

SCREW-PROPELLERS.

CONTENTS.—Generating a Screw Surface—Pitch of a Screw—Length of Screw Blade—Depth of Thread—Angle of Screw—Circumference of Screw—Moulding a Screw—How to find the pitch of a finished Propeller—Early forms—Ordinary form—Griffith's, Hirsch's, Mangin's, and Thornycroft's Screws—Slip of the Screw—Thrust—Example I.—Negative Slip—Best Diameter, Revolutions and Pitch for a Screw-propeller—Examples II. and III.—Prof. M'Dermott's Screw Propeller Computer—Example IV.—Questions.

Generating a Screw Surface.—Each blade of a screw propeller may be regarded as a portion of the thread of a screw of great pitch and depth. The following figure illustrates how the surface of a screw-propeller blade is swept up and moulded in the foundry.

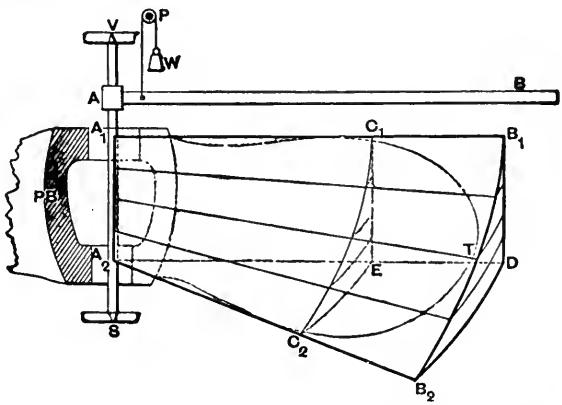

Erect a vertical spindle, V S, held in centres or pivots at, V, and, S, with an arm or loam board, A B, at right angles to the spindle. This loam board is free to move up and down the spindle, V S, as well as to turn round it, owing to its being fitted with a collar at, A. A counter weight, W, attached to a wire or rope passing round a pulley, P, and fixed to a hook on the board or on the collar, A, balances, A B, in any position. Now, suppose this arm to be moved uniformly down the vertical spindle from position, A_1, to position, A_2, and at the same time to be revolved uniformly around it. It is clear, that the outer end of the arm will travel from position, B_1, to position, B_2, and thus trace out a spiral curve. Every point along, A B, will trace at

the same time a spiral curve, *e.g.*, C_1 to C_2; consequently, the whole surface swept through will be a spiral or screw surface.

Pitch of Screw.—If the board, A B, had made a complete revolution around the vertical spindle while it descended from A_1 to A_2, then the height, $A_1 A_2$, would have been equal to the pitch of the screw; or the distance between two consecutive threads measured parallel to the axis of the screw is the pitch. In other words, it is the forward distance through which the screw would advance in one revolution, if the nut in which it turned were solid and fixed.

Diameter of Screw.—The diameter of a screw propeller is the diameter of the circle described by the tips of the blades when revolving, or 2 $A_1 B_1$ in the figure. The area of this circle is called the *disc area* of the screw.

Length of Screw Blade or Depth of Thread.—The length of blade or depth of thread is the distance from the tip to root of the blade where it enters the boss measured radially.

Angle of Screw.—In screws such as we are now considering, viz., with a constant pitch throughout the blade, the angle of the blade to the vertical axis gradually increases from the tip at, T, towards the root; thus, the angle at the tip or radius, $A_1 B_1$, in the figure is, $B_1 B_2 D$, and this is less than the angle, $C_1 C_2 E$, at the radius, $A_1 C_1$.

Circumference of Screw.—The circumference is 2π times the radius of the blade, or $2\pi \times A_1 B_1$.

If we plot down a vertical line to scale for the pitch, and a horizontal line from the same point to the same scale for the circumference, and join their extremities, then the angle of the screw is represented by the angle contained between the hypothenuse and the base or circumference line; or, the tangent of the angle of the screw = pitch ÷ circumference.

Moulding a Screw.—Referring again to the figure, we now see that all we have to do in order to form the flat or forward surface of a screw-propeller blade is, (1) to erect in the foundry the vertical spindle, V S, with the loam board, A B, and to set up a wooden templet, $B_1 B_2 D$, at the extremity of the radius, having the proper angle to give the desired pitch; (2) to build up with bricks a firm solid backing behind the curved surface, $A_1 B_1 B_2 A_2$, covering it with moulder's loam, sweep it smoothly down with the board, A B, dry it, and wash it down with black carbon wash; (3) to cut away the central part of the curved surface so as to admit of the propeller boss pattern, P B, or the flange (see next figure), and mark off on the curved surface, the contour of the blade, $A_1 C_1 T C_2 A_2$; (4) to fix wooden thickness—pieces of the following shape ⌙ around this curved surface; (5) to fill

the intervening space with loam and dry it; (6) to take a negative impression of this back or curved surface of the blade; (7) to remove the thickness pieces and the curved loam between them; (8) to wash down with moulder's carbon wash both the flat and the curved or back surface of the blade mould, and put the halves together, adjust the central core, dry the whole, and pour in the metal.*

How to find the Pitch of a finished Propeller.—(1) Plumb the axis or level points on the blades equidistant from the centre; (2) describe a circle with the axis as a centre on the upper face of the boss; (3) draw a radial line on the boss from the centre in line with the front edge of one blade; (4) lay a long wooden straight-edge (such as, A B, in the last figure), level and fair along this radial line, and measure the vertical distance from its under or straight surface to any desired point, such as, C_1, at a radius, $A_1 C_1$, from the centre; (5) move this straight edge round $\frac{1}{12}$ of the circumference of the circle on the boss, *i.e.*, through an angle of 30°, level it again, and measure at the same radius as before, the vertical distance from its under surface to a point on the blade. Then, since there are 12 inches in a foot, the difference between these two vertical measurements in inches represents the pitch of the screw-propeller blade in feet. This is the practical method adopted in marine engine works.

Early Forms.—The earliest screw propellers were single-threaded screws, and consisted of part of a true helix cut off by parallel planes at right angles to the axis. They were made much longer in the direction of the axis than is general at the present time, and even after double-threaded screws came into use, it was supposed by some that a full turn or more of the thread was necessary in order to form an efficient propeller. Properly speaking, the single-threaded screw had only one blade or arm; but this form of screw was not long in use, and the two-bladed or double-threaded screw was the one which was employed almost without exception for many years. The length was made only about one-sixth the pitch. The usual number of blades in the screw propellers employed at the present time is two, three, or four; and, except in large sizes, the blades are cast along with the boss, which is of a spherical or of an oval shape. The pitch of the blades is usually uniform, but sometimes the pitch of the leading half is made less than that of the following half, so as to make the effort of the blade on the water more gradual. The two-bladed screw propeller is very efficient so long as it is wholly immersed; but in rough weather when the ship pitches, its efficiency rapidly falls off, due to a portion of screw rising out of the water. In war vessels, where the screw

* If the metal is of cast-iron, as much wrought-iron scrap as practicable should be melted with it in order to render the blades tough

requires to be raised out of the water while the vessel is under sail, two-bladed screws are necessary and have been frequently used. The three-bladed screw is not now so much used as formerly for large screws, since it is open to the objection that if one blade is broken, the screw is badly balanced and throws serious stresses on the engines.

The four-bladed screw is the one which is now most generally adopted, both in the merchant service and in the navy, when it is not necessary to lift it out of the water.

Ordinary Forms.—The diagram below illustrates the form of screw propeller which is commonly used in practice.

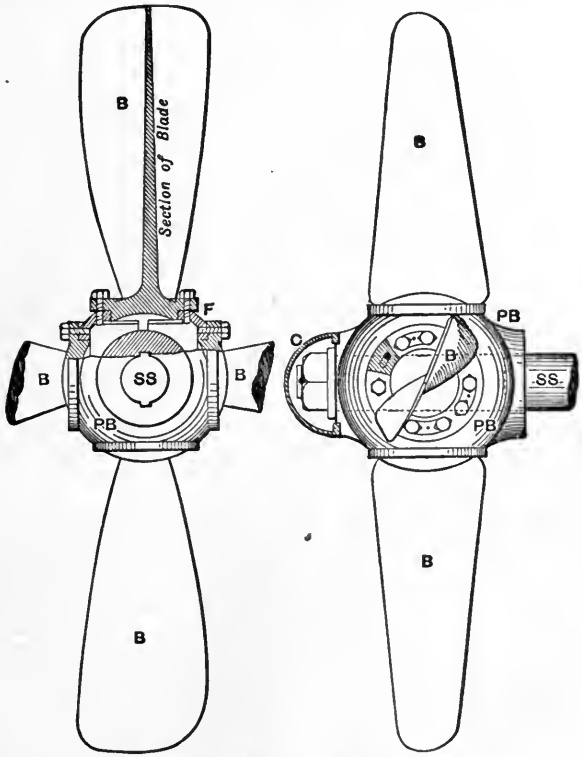

ORDINARY SCREW WITH FOUR BLADES.

P B for Propeller boss.
B ,, Blades.
F ,, Flanges.

S S for Screw shaft.
C ,, Cap for preventing a vacuum forming at after end.

The boss, P B, is usually of cast iron and spherical in form, and has four recesses in it to receive the blades, B. The hole in the boss for the reception of the screw shaft is tapered, and the boss is fixed to the shaft by one or two long keys or feathers which are sunk into the shaft, and fit a key-way in the boss. The boss is prevented from being drawn off endwise by a large nut, which is of opposite screw to the propeller, and usually has a small tapered pin behind it, which passes through the shaft and prevents the nut from slacking back. The nut is prevented from forming a vacuum at after end by a brass or gun-metal cap, C, which is fixed to the boss, as shown in the drawing. The boss is usually forced tightly on the screw shaft by hydraulic pressure or ramming, before the nut is screwed up. The blades of the screw are formed with flanges on their inner ends, and these flanges are faced and bolted in to the recesses formed to receive them in the boss. The holes in the flanges of the blades are not round, but are elongated as is shown on the drawing, so that each blade may be turned round a little, and its pitch altered slightly if required. The spaces between the bolts and the ends of the holes are filled in with small pieces of brass or lignum-vitæ, to prevent the blade from shifting after the pitch has once been adjusted. Thin wrought-iron plates fixed down by a small screw pin are fitted between the nuts which hold down the blades, so as to prevent the nuts from turning. In moderate sizes of screw propellers, the boss is always cast along with the blades; and since there are no nuts or projections on it, it offers less resistance to the water than when the blades and the boss are separate. In the drawing of the screw propeller, the flanges of the blades are shown projecting above the general outline of the boss; but this need not be the case, since the flanges may be rounded on the top (as shown in the Fig.), and recessed down flush with the boss, with the nuts also recessed into the base of the blade. In the best practice large screws are made with a neat metal cap so fitted and fixed to the flanges of the blades as to cover in the heads of the nuts and studs; or, as is sometimes done with cheaper propellers, the projecting angles of the flanges and nuts are smoothed over with a strongly adhering kind of plaster, which resists the action of sea water and prevents corrosion. The great advantage of constructing the screw with the blades separate from the boss is, that if one of the blades

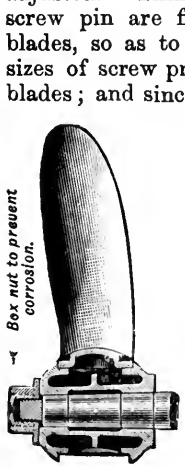

DELTA-METAL SCREW FOR RUSSIAN CRUISER.

should be damaged it may be replaced without the expense of an entirely new screw, and without the necessity of taking the ship into dock in order to have the boss forced off. It has, however, been adopted for large vessels only, since it is much more expensive.

The blades of screw propellers were until recently made exclusively of cast-iron; but in modern practice, steel, manganese or phosphor-bronze, and Dick's Delta-Metal have been used, and in most cases with improved results. When the blades are made of steel they may be much thinner than when of cast-iron, and steel being a more ductile as well as a stronger material, they are more reliable. Steel blades are of course more expensive, and corrode more rapidly than iron blades; but, since the thickness of the blades is less, they are more efficient. Blades of phosphor-bronze and of manganese-bronze have proved very efficient, but they are much more expensive than steel blades. They may also be made thinner than cast-iron blades, since the metal is tougher and stronger, and there is no loss by corrosion. They are very smooth on the surface, and the frictional resistance is very small. Messrs. John Elder & Company (The Fairfield Works, Govan) invariably make their propellers of bronze. The propeller for a Russian Torpedo Cruiser, lately built in Sweden, was made of Dick's Delta-Metal, of which the figure at the side on the last page is a section. The inventor claims for this material (which is simply an improved kind of brass), that it resists the action of sea-water, and that the galvanic action is less between it and the iron or steel of the ship than that from bronze. He also claims that it can be made as tough as wrought-iron, and as strong as mild steel, with the further advantages, that it can be forged, stamped, or rolled hot, or worked, drawn, and spun when cold.

Griffiths' Screw.—In the early forms of screw the boss was made very small in diameter, no larger in fact than was absolutely necessary for strength. The roots of the blades were consequently almost close to the shaft, and therefore in the case of screws with large pitch, nearly in a fore and aft direction, or at right angles to the plane of rotation. The effect of this was to throw off the water at the roots nearly at right angles to the shaft, thus adding very little to the propelling effect. A considerable amount of power was expended in simply churning the water, besides seriously disturbing the water upon which the outer and more effective portion of the blades had to act. The ends of the blades were very broad and

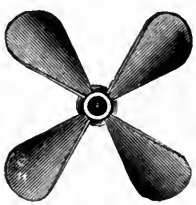

SMALL BOSS SCREW.

square, and thus absorbed a good deal of power by surface friction. To obviate these defects, Mr. Robert Griffiths devised his well-known propeller which is very much used in large first-class steamers and in the Navy. It has three

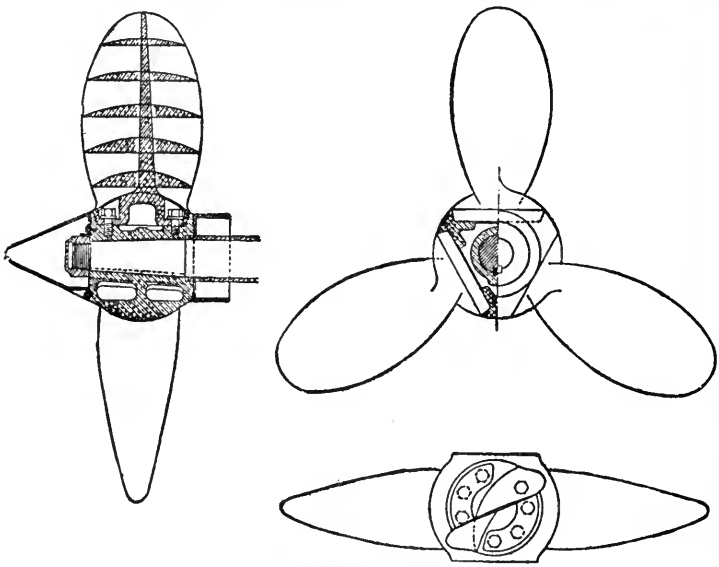

GRIFFITHS' SCREW.

important features. The first of these is the very large spherical boss. Mr. Griffiths originally had the boss made $\frac{1}{3}$ the diameter of the whole screw; but now it is seldom made more than from $\frac{1}{4}$ to $\frac{1}{5}$ of the diameter. The use of such a large boss will at once be understood from what we have said about the early forms of screws. It fills up the space that was formerly occupied by the useless inner portions of the blades, prevents wasteful agitation of the water at the centre (for the round boss revolves quietly, and causes little frictional resistance), and reduces the vibration. The second improvement is in the form of the blades, which are tapered off at the tips, thus reducing the former loss from friction. In the original Griffiths' screw the tips of the blades were bent slightly forward; now they are generally straight, and are sometimes bent backwards. The third improvement which resulted directly from the first, is that the heads of the nuts and studs can easily be covered in by

a neat metal cap, and that there is plenty of room for admitting of the adjustment of the pitch to the required amount. This is an important consideration; for it is sometimes difficult to hit upon the best pitch for a vessel until after she has been tried, and it is extremely convenient to be able to alter the angle of the screw-blade without having to make a new propeller.

Hirsch's Screw.—In this propeller there are generally four blades, which are curved towards the direction of rotation like the hands of a man in the act of swimming, or like the point of an oar. It is advocated that this curved form of blade diminishes the vibration of the screw, and arrests the tangential force of the water, thus throwing the water more directly sternwards than an ordinary straight blade does. The pitch is not uniform throughout the blade, but increases towards the point, and towards the root; whilst the following side of the blade has a somewhat less pitch than the leading side, so as to let the water escape more freely sternwards.

Mangin's Screw.—This propeller consists of two sets of blades, the one being placed immediately behind the other, and fixed to the same boss. There is consequently a space between the forward and the after set of blades. It is supposed not to rotate the water so much as a propeller with one set of blades; and when a ship is under sail with the propeller fixed, there is not so much resistance as with an ordinary two-bladed one of the same power, since the transverse section of the former is only about one-half that of the latter.

Thornycroft's Screw.—This screw, which has been very successful in torpedo boats, for which the inventor's firm is famous, was thoroughly described, along with a series of interesting experiments, by Mr. Sidney W. Barnaby, M.I.N.A., in a course of lectures delivered in 1885 at the Royal Naval College, Greenwich.*

It has broad short blades so as to obtain the necessary blade surface, and at the same time to keep the propeller completely immersed below the surface of the water, which is difficult to attain with the ordinary form of blade, owing to the small draught of the torpedo boat. So long as a propeller is immersed sufficiently far below the surface of the water to prevent it drawing in air, any further immersion within the limits obtainable in a ship, has little beneficial effect, for the speed with

* Mr. Barnaby has issued these lectures in book form, published by Messrs. E. & F. Spon, under the heading "Marine Propellers," which should be carefully perused by all students interested in the construction of steamers. We are indebted to him for our brief description and sketch of Thornycroft's screw, as well as for the Figs. of Griffiths' screw.

which water can follow up the blades of a screw depends upon the direct vertical pressure on the water; and, since the pressure of the atmosphere corresponds to a head of 34 feet of water, a few feet more due to immersion of the blades in the water has but a corresponding effect. Messrs. Thornycroft and Barnaby, in their experiments with a model Thornycroft screw, found

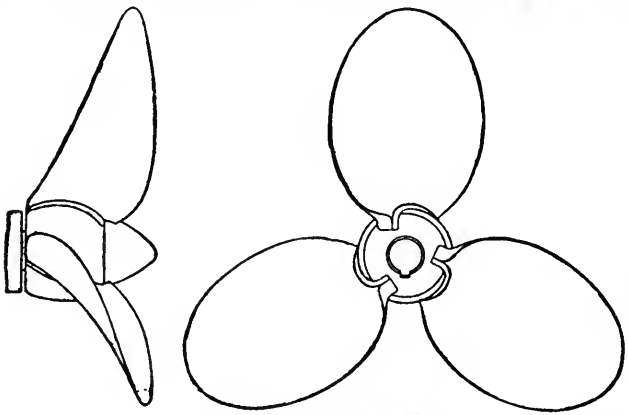

THORNYCROFT'S SCREW.

that the efficiency fell from 70 to 50 per cent. when the screw-blades were permitted to break the surface of the water.

Thornycroft's propeller has at the middle of the blades an increasing pitch, gradually becoming uniform towards the tips and towards the roots. The reason for adopting this is, that if the water be accelerated too much, it turns round the points to the back of the blades, and the rotation of the water being naturally greatest towards the roots owing to the angle of the blade there, it is not advisable to increase this evil effect. The blades are inclined sternwards, and are slightly concave on the driving side, in order to restrain the centrifugal or tangential force of the water, and throw it as far as possible fair astern. Since this centrifugal action is naturally greatest at the root, owing to the greater angle of the blades, the inclination and curvature given to the blades is greatest near the roots.

Many other forms of screw propellers have been devised, but we have given those in general use. Feathering propellers have often been proposed and tried, but the mechanism required to enable the screw to be properly feathered, *i.e.*, to turn the blades in a fore-and-aft direction when the ship is under sail, is liable to get out of order, and is only adopted under exceptional

cases, such as yachts or sailing ships requiring auxiliary power. Twin screws are used where the draught of water of the ship will not permit of a single screw of sufficient diameter being used for the required horse-power, and where quick turning and manipulation of the ship's movements are advisable, as in a man-of-war or in a telegraph cable ship.

Slip of the Screw.—If the screw worked in a solid unyielding nut, then the distance travelled by the ship in a given time would be equal to the number of revolutions made by the screw in that time, multiplied by the pitch of the screw. But the water which forms the nut for the screw propeller is not unyielding. The result is, that the ship does not progress a distance equal to the pitch of the screw for each revolution. The difference between the speed of the ship and the speed of the screw (*i.e.*, the pitch × the number of revolutions), is termed the "*slip*" of the screw. This, however, is only the *apparent slip;* in order to find the *real slip* of the screw, the velocity of the stream of water which always follows a ship, and in which the screw works, must be known. When a common screw works in a solid nut, it advances for each revolution a distance equal to the pitch of the screw, and the nut remains stationary; but when the nut is formed of a yielding medium such as water, then the screw slips. The water does not remain stationary during the rotation of the screw, but is projected backward by the screw in a direction opposite to that in which the ship is travelling. The *actual* velocity of this column of water thrown back by the screw therefore represents the true or *real slip* of the screw.

Thrust.—When a screw steamer is moving forward at a uniform speed, the reaction of the mass of water projected backwards by the propeller is exactly equal to the resistance opposed to the forward motion of the vessel. It is, therefore, absurd to attempt to get a screw propeller to work without any slip, for if there was no real slip, then there would be no resultant propelling reaction.

If W = weight of water acted on in lbs.
S = slip of screw in feet per second.
g = acceleration due to gravity = 32·2 feet per second per second.

$$\text{Reaction} = \frac{WS}{g} \text{ in lbs., urging the vessel forward.}$$

Or, this is the thrust of the screw on the ship along the line of screw shafting in pounds. Professor Rankine in his *Rules and Tables*, p. 275, Rule V., reduces the above equation to a more convenient form for practical use, viz.:—*To calculate the thrust of a*

propelling instrument (jet, paddle, or screw) in pounds; multiply together the transverse sectional area in square feet, of the stream driven astern by the propeller; the speed of the stream relatively to the ship in knots, the real slip, or part of that speed which is impressed on that stream by the propeller also in knots; and the constant 5·66 *for sea water, or* 5·5 *for fresh water.*

Thus—

Let A = Area of stream driven back in square feet.
S = Speed of screw in knots
s = Speed of ship ,,
$\therefore$ S − s = Apparent slip.

Then—

The thrust in pounds = **A** × **S** (**S** − s) 5·66.

Example I.—Find the thrust of a screw propeller, 16 feet diameter, having a boss 4 feet diameter, when driving a ship at a speed of 15 kts.; the slip of the screw being 10 per cent.

$A = \pi (r_1^2 - r_2^2) = 3{\cdot}1416\ (8^2 - 2^2) = 188{\cdot}5$ square feet.
s = 15 knots.
S = (90 : 100 : : 15 knots : S) = $16{\cdot}\dot{6}$ knots.
$\therefore$ A × S (S − s) 5·66
= $188{\cdot}5 \times 16{\cdot}\dot{6}\ (16{\cdot}\dot{6} - 15)\ 5{\cdot}66$ = 29,630 lbs.

Negative Slip.—In every screw propeller, as we have already shown, there must be a certain amount of actual or real slip, due to the yielding nature of the water which forms the nut for the screw. The curious phenomenon of negative slip, or, in other words, the speed of the screw being less than that of the ship, has received a good deal of attention from various writers on the screw propeller, and has given rise to various theories on the subject, but in reality there can be no such thing, if we duly take into account all the circumstances. Some have attributed the observation of negative slip to a wrong determination of the effective pitch of the screw, which is rather a difficult thing to measure accurately in the case of a screw having a variable pitch; others have tried to explain it by pointing out that the screw works in the "wake," or disturbed stream of water which follows and rushes in to fill up the space left by the ship when moving forward, so that the velocity of the ship with respect to this following body of water is less than the real velocity of the ship, with respect to the dead water some distance away from her. Whatever may be the true cause of negative or rather apparently negative slip (and which is more apparent with some ships and with some forms of pro-

pellers than others), one thing is certain, that, should it be observable, it is a sign that the screw is not working efficiently; and the sooner it is changed for one that will give a moderate but not an excessive amount of real slip (say from 10 to 15 per cent.) the better.

Best Diameter Revolutions and Pitch.—Mr. Barnaby, in his *Treatise on Marine Propellers* (p. 49), points out, "that in designing the propelling machinery for a new vessel, the thing to start with is the size of the propeller, and not the size of the engines. The engines exist only to drive the propeller, and should be subordinated to it. Having therefore a given speed of vessel and a given horse-power to start with, fix upon the diameter of the propeller, then upon the revolutions suitable for that propeller. With these things fixed it is then easy to find the size of the engine. It is an entire reversal of the proper process to say, 'I will run my engine at such and such a speed, and make a propeller to suit.'" He gives the following rules * for finding the diameter and revolutions:—

Take the data from an actual propeller driving a ship of certain proportions which is known to give a good performance, and treat the same as a model for the new vessel having similar proportions.

The diameter is proportional to the $\sqrt{I.H.P.}$*, and inversely proportional to the square root of the cube of the speed.*

EXAMPLE II.—

Let d = diameter of model propeller = 5·0 feet.
D = diameter of required propeller.
p = I.H.P. of the model propeller = 670.
P = I.H.P. of required propeller = 1800.
v = speed of vessel with model propeller = 18 knots.
V = " " required " = 20 "

Then—

$$D = \sqrt{d^2 \times \frac{P}{p} \times \frac{v^3}{V^3}}$$

$$= \sqrt{5^2 \times \frac{1800}{670} \times \frac{18^3}{20^3}} = 7 \text{ feet (if model smaller).}$$

Or $$\frac{D}{d} = \sqrt{\frac{P}{p} \times \frac{v^3}{V^3}} = \sqrt{\frac{1800}{670} \times \frac{18^3}{20^3}} = 1{\cdot}4$$

$\therefore$ D = 1·4 d = 1·4 × 5 = 7 feet.

* The advanced student should also study the rules given by Seaton in his *Manual of Marine Engineering* (latest Ed.). Also, Mr. Robert Caird's paper "On Propeller Diagrams," *Inst. of Engs. and Shipbuilders in Scotland*. 1895-96.

The revolutions per minute are proportional to the speed, and inversely proportional to the diameter.

Using the same letters and data as above.

Let r = revolutions per minute of model propeller = 400

R = " " required "

Then—

$$R = r \times \frac{V}{v} \times \frac{d}{D}$$

$$= 400 \times \frac{20}{18} \times \frac{5}{7} = 318 \text{ revolutions.}$$

If the model used is larger the ratios are reversed.

$$\therefore r = 318 \times \frac{18}{20} \times \frac{7}{5} = 400 \text{ revolutions.}$$

The pitch of the propeller should then be made the same ratio to the diameter as in the model. The pitch should never exceed $2\frac{1}{2}$ times the diameter.

Thrust, Diameter, and Pitch of Screw Propellers.—*The thrust of a propeller* varies directly as the area of its disc—*i.e.*, it varies as the square of its diameter. It also varies directly as the square of the velocity of the flow of water projected back from and by the screw; or, as the square of the product of the revolutions and pitch. But, the speed of the ship varies as the product of the revolutions and pitch, and, therefore, the I.H.P. of the engines should vary as the thrust and speed.

Let T_S represent the thrust, P_S the pitch in feet, while D is the diameter in feet, and R the revolutions per minute as before.

Then, $T_S \propto D^2 (R \times P_S)^2$. Also I.H.P. $\propto T_S (R \times P_S$, or $\propto D^2 (R \times P_S)^3$.

Hence—

$$\text{I.H.P.} = K \times D^2 (R \times P_S)^3. \quad \text{Or, } D = \sqrt{\frac{\text{I.H.P.}}{K (R \times P_S)^3}}. \quad \text{And, } P_S = \frac{1}{R} \sqrt[3]{\frac{\text{I.H.P.}}{K \times D^2}}.$$

Where K is a constant found by trial for different classes of steamers and screws. For example, if $K = \frac{1}{4 \times 10^3}$ for an ordinary steamer—

$$\text{Then, } \quad D = 20{,}000 \sqrt{\frac{\text{I.H.P.}}{(R \times P_S)^3}}. \quad \text{And, } P_S = \frac{737}{R} \sqrt[3]{\frac{\text{I.H.P.}}{D^2}}.$$

EXAMPLE III.—Find the diameter of a screw of 20 feet pitch for a 1,200 I.H.P. marine engine going at 70 revolutions per minute.

$$\therefore \quad D = 20{,}000 \sqrt{\frac{1{,}200}{(70 \times 20)^3}} = 13\tfrac{1}{4} \text{ feet.}$$

LECTURE XXII.—QUESTIONS.

1. Describe briefly, and show by a sketch, the method of moulding a screw-propeller blade.

2. Define the pitch, length, angle, and circumference of a screw propeller, as well as the depth of thread, and exemplify them by means of sketches.

3. How would you find the pitch of a finished screw-propeller blade?

4. Sketch and describe by an index of parts an ordinary modern four-bladed screw propeller. How may a blade be replaced by a new one without unshipping the propeller? How can the pitch of a blade be altered within limits, and of what advantage is this device to the engineer?

5. Sketch and describe Griffiths' screw. What important advantages has it over the older forms of screw propellers; and why?

6. Describe the general arrangement of Hirtsch's and Magin's screw propellers.

7. Sketch and describe Thornycroft's torpedo-boat propeller, and give the reasons assigned for adopting this form.

8. What is meant by the slip of a screw? Distinguish between apparent and real slip. Can there be any such effect as negative slip; if so, how; if not, why not?

9. How is the thrust from a screw propeller calculated? Find the thrust from a screw, whose slip is 10 per cent. and the speed of the ship 12 knots; the diameter of screw is 14 feet; and that of the boss 3 feet. *Ans.* 14,790 lbs.

10. Show how to find the best diameter, revolutions, and pitch for a screw propeller. Taking as a model the example given in the lecture, find the diameter, revolutions, and pitch for a ship's propeller of 2000 I.H.P., having a speed of 15 knots. *Ans.* 11·3.

11. When designing the machinery for a new vessel, what data should be given, what should first be determined, and why? A ship attains a speed of 16 knots, the mean pitch of the screw is 18 feet, and the number of revolutions per minute 88, what is the slip per cent.? Is it positive or negative? *Ans.* 37 feet per minute and negative.

12. Give a good, general, clear idea of a computer for screw propellers. State in what cases you think they may be useful, and why?

13. State and illustrate by a formula and an example how a thrust of a screw propeller varies with its diameter, pitch and revolutions per minute. Also, show how to find the diameter of a propeller for an ordinary passenger boat when you are given the I.H.P., revolutions per minute, and pitch of the propeller.

LECTURE XXIII.

TRIPLE- AND QUADRUPLE-EXPANSION ENGINES.

CONTENTS. — Theory of Triple-Expansion Engines — Triple-Expansion Engines of the S.S. *Arabian*—Brock's Quadruple-Expansion Engines for the S.S. *Buenos Aires* — Quadruple-Expansion Engines of the S.S. *Inchdune*—The "Central" Superheaters, Air-heaters, and Steam Traps—Indicator Diagrams and their Combined Results—Questions.

Theory of Triple-Expansion Engines.—Economy of coal is one of the chief things to be kept in view by engineers in designing most kinds of steam engines, but more especially in the engines for steamers intended for long voyages. Not only does every ton of coal saved mean a ton of freight earned, but it also means a saving of expense in firing, and in many trades of time in stopping to coal at outlying ports, where the fuel is expensive.

Within the last twenty years the chief direction in which economy has been sought, has been by a gradual increase of the steam pressure. Unfortunately, however, as we increase the pressure, we do not gain proportionately in efficiency (as will be seen from the following table), and a time must come when it will not pay to increase the pressure further, from the difficulty of keeping the cylinders lubricated at high temperatures, as well as from the untrustworthiness of steel for the furnaces at a blue heat (about 470° F.), and the necessarily increased thickness of the boiler plates, &c.

As we pointed out in Lecture XIII., the utmost efficiency possible with a steam engine (supposing no practical difficulties intervened to prevent its realisation) is represented, *by the difference between the absolute temperatures of the boiler steam and that of the condenser, divided by the absolute temperature of the former.*

Or, by the formula—

$$\frac{\tau_2 - \tau_1}{\tau_2}.$$

Where τ_2 = the absolute temperature of the boiler steam,
and τ_1 = " " " condenser.

Now, assuming the temperature of the condenser to be 100° Fah., the efficiency as we increase the pressure from steam of atmospheric pressure to that of 300 lbs. on the square inch, is given in the following table:—*

For	0 lbs.	or Atmospheric pressure		the efficiency =	16·6 per cent.
,,	10 ,,	boiler pressure by gauge		,, =	20·0 ,,
,,	20 ,,	,,	,,	,, =	22·1 ,,
,,	30 ,,	,,	,,	,, =	23·7 ,,
,,	40 ,,	,,	,,	,, =	25·0 ,,
,,	50 ,,	,,	,,	,, =	26·1 ,,
,,	60 ,,	,,	,,	,, =	27·0 ,,
,,	80 ,,	,,	,,	,, =	28·6 ,,
,,	100 ,,	,,	,,	,, =	29·8 ,,
,,	125 ,,	,,	,,	,, =	31·1 ,,
,,	150 ,,	,,	,,	,, =	32·2 ,,
,,	200 ,,	,,	,,	,, =	33·9 ,,
,,	250 ,,	,,	,,	,, =	35·3 ,,
,,	300 ,,	,,	,,	,, =	36·5 ,,

From the above table it will at once be seen that Watt, in working with low pressure steam, had at his disposal the most prolific portion of the efficiency curve, and as we gradually raise the pressure, the rate of increase of efficiency becomes less and less, until about 300 lbs. the curve becomes very flat.

The actual efficiencies of steam engines must, in practice, for many reasons, be always much less than the above values; the chief reason being the condensation of steam in the cylinder or cylinders. Nevertheless, the ratio of the above figures, or the curve plotted from them, will be proportional to, or represent to scale, the relative efficiencies of engines working at different pressures, if we assume that the sum of all the losses which contribute to the reduction of the actual below the theoretical efficiency, is proportional to the work done in the engine cylinder or cylinders. In advancing from 60 lbs. (the usual pressure adopted on the introduction of the compound engine and for several years afterwards) to 150 lbs. (the pressure now being used in most triple-expansion engines), we see that the efficiency rises from 27·0 to 32·2 = 5·2. Or, as $27 : 5{\cdot}2 :: 100 : x = 19{\cdot}25$ per cent. increase of efficiency. But from the actual trials of a mail steamer, the engines of which were altered from compound to

* The student should verify the accuracy of the above table for himself by calculation, referring for the temperatures corresponding to the various steam pressures (absolute) to Table II., and for the percentage efficiencies to the data in Lecture XIII.; he should then plot out an efficiency curve, using the boiler pressures for abscissæ and the corresponding efficiences for ordinates.

triple-expansion, the decrease in the consumption of coal was 33* per cent., while the speed remained the same.

Several other instances of increased economy due to the adoption of higher pressures and triple-expansion engines may be given. One other of these instances we shall quote here. "Two large passenger steamers of over 4,500 gross tonnage, having engines of about 6,000 I.H.P., built of the same dimensions, from the same lines, with similar propellers, are exactly alike in every respect except so far as their machinery is concerned. One vessel is fitted with triple-expansion engines, working at a pressure of 145 lbs. per square inch, whilst the other vessel is fitted with ordinary compound engines, working at a pressure of 90 lbs. per square inch. Both vessels are engaged in the same trade, and steam at the same rate of speed, viz., 12 nauts per hour. The latter vessel on a round voyage of 84 days burns 1,200 tons more coal than the former."

The fact that a greater increase in economy is actually realised with triple-expansion engines than what we might have been led to expect, from merely taking the performances of compound engines and the proportionate increase of pressure into account, shows, that the triple-expansion engine works under conditions more nearly approaching to those required for the maximum efficiency. This may be partly accounted for from the circumstance, that the range of temperature through which the steam passes in any one cylinder in the course of one revolution is less, and consequently the wasteful condensation of steam is reduced.†

For example.—(1.) Take steam of 60 lbs. boiler pressure, doing work in a compound engine.

Then 60 lbs. = 75 lbs. absolute = 307° Fah. (See Table, II.)

Let this fall in temperature through two cylinders to the condenser at 100° Fah.

$$\therefore \frac{307° - 100°}{2 \text{ cyls.}} = 103°{\cdot}5 \text{ for the fall in temperature in each}$$

cylinder, supposing the fall to be equal in each.

* The compound engine was poor, and 25 per cent. sufficient.

† The above reasoning does not refer to superheated steam. See *Proc. Inst. C.E.*, vol. xcix., Part i., "Reynolds on Triple Expansion." See *Trans. N.E.C. Inst.*, vol. xiii., "Weighton on Quadruple-Expansion Engines;" also, *Proc. Inst. C.E.*, vol. cxlv., p. 444.

(2.) Take steam of 90 lbs. boiler pressure, doing work in a compound engine.

Then 90 lbs. = 105 lbs. absolute = 331°·3 Fah.

$$\therefore \frac{331°·3 - 100°}{2 \text{ cyls.}} = 115°·6 \text{ for the mean fall in each cylinder.}$$

(3.) Take steam of 150 lbs. boiler pressure, doing work in a triple-expansion engine.

Then 150 lbs. = 165 lbs. absolute = 366° Fah.

$$\therefore \frac{366° - 100°}{3 \text{ cyls.}} = 88°·6 \text{ for the mean fall in each cylinder.}$$

(4.) Take steam of 200 lbs. boiler pressure, doing work in a quadruple-expansion engine.

Then 200 lbs. = 215 lbs. absolute = 388° Fah.

$$\therefore \frac{388° - 100°}{4 \text{ cyls.}} = 72° \text{ for the mean fall in each cylinder.}$$

(5.) 200 lbs., with five expanding cylinders, gives a mean fall of 57°·6 Fah. for each cylinder.

The leakage of heat energy to the condenser is also less, for the same power developed by the engines on the triple and quadruple expansion principle. No doubt a great deal of the greater economy that may be obtained from triple- and quadruple-expansion engines depends upon properly proportioning the areas of the several cylinders and receivers, so as to take as full advantage of the expansion of the steam as possible. In order to illustrate this point, Mr. Parker of Lloyd's, in the paper already referred to, instances two sets of engines made by two well-known firms. "In engine No. 1, the cylinders are proportioned as 1 : 2·5 : 7·11; the boiler pressure is 150 lbs. per square inch, and the mean pressure of the three cylinders reduced to the low-pressure cylinder, is 25·61 lbs. In engine No. 2, the cylinders are proportioned as 1 : 2·5 : 5·28; the boiler pressure is 135 lbs. per square inch, and the mean pressure reduced to the low-pressure cylinder, is 32·1 lbs. per square inch. It will be seen at once that engine No. 2 is not using the steam so expansively as engine No. 1, and in proportion to the size of low-pressure cylinders, it is doing $\frac{32·1}{25·61}$, or 1·253 times as much work as No. 1. On measuring the amount of steam used per

revolution from the indicator diagrams, it was found, however, that engine No. 2 used 1·494 times as much weight of steam as engine No. 1; and as it only did 1·253 times as much work, the efficiency of No. 1 must be $\frac{1{\cdot}494}{1{\cdot}253}$, or 1·19 times greater than that of No. 2; in other words, No. 1 engine would give 19 per cent. more power than No. 2, from the same weight of steam used.

Engineers and the owners of steamships generally are fast recognising the advantages of the triple-expansion engine over the ordinary compound form; so much so is this the case, that triple- and quadruple-expansion engines are almost exclusively now used for large ships. The chief stimulus to this change was given by Mr. A. C. Kirk, of Messrs. Robert Napier & Sons, who in 1881 designed and built the engines and boilers of the S.S. *Aberdeen;* for, previous to that, no one had had the courage to use steam of 125 lbs. at sea for large vessels in a boiler of the ordinary marine type.

Seeing that we are so close to what appears to be the limit of pressure that can be economically and safely used in large marine engines, engineers will soon have to turn their attention in other directions than that of still further increasing the steam pressure, in order to save the coal bill; such as better methods of combustion, and of transferring heat from the furnace or fuel to the water, and to reducing the amount of power absorbed by the machinery itself. At least 50 per cent. of the power developed in the cylinders of the very best marine engines of the present day, is absorbed or lost in overcoming frictional and other resistances, thus leaving only about half the power generated in them for the main and useful purpose of propelling the ship.

Triple-Expansion Engines, S. S. "Arabian."— The following perspective view, and the accompanying folding-page, illustrates * a successful form of small power triple-expansion twin-screw engines, manufactured by Messrs. Rankin & Blackmore of Greenock for the S.S. *Arabian*. This steamer, which is employed

* We are indebted so Messrs. Rankin & Blackmore for the illustrations, reduced from what appeared as a large two-page engraving, and full-page perspective view in *Engineering*.

Honours student should refer to the latest edition of Seaton's *Manual of Marine Engineering* for views of the different ways by which Triple and Quadruple Expansion have been carried out in practice.

on the West Coast of Scotland Trade, carries about 240 tons of cargo on a light draught, and is 126 feet long, 22 feet beam, and 9 feet 6 inches depth of hold. On her trial trip, April 26, 1884, she attained a speed of 10 knots, on a mean draught of 5 feet 7½ inches.

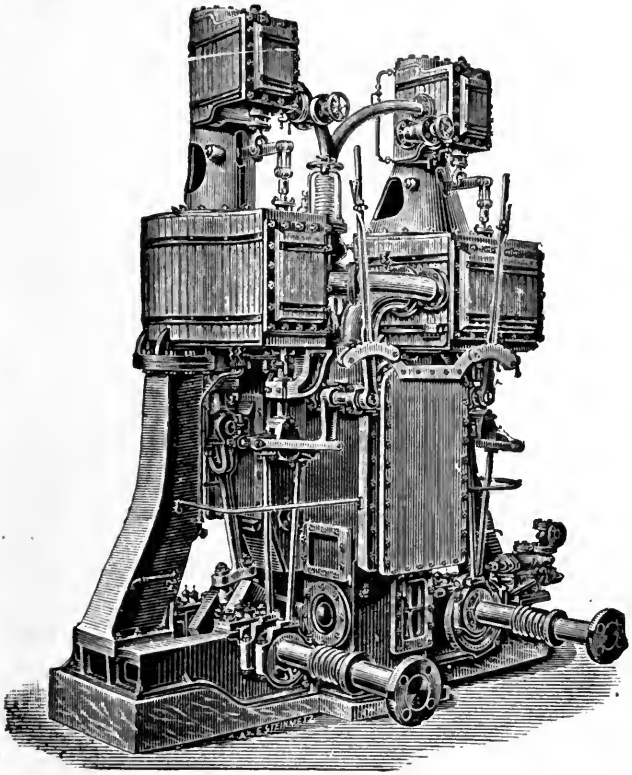

TRIPLE-EXPANSION TWIN-SCREW ENGINES.
BY MESSRS. RANKIN & BLACKMORE.

The engines are constructed on what is known as the makers' Improved Patent Triple-Expansion Disconnecting Type (of which they have several modifications both for screw and paddle steamers), suited to an initial pressure of 150 lbs. on the square inch.

Arrangement of Cylinders.—Referring to our illustrations and to the "Index to parts" on the folding page (which should be carefully compared by the student before reading the following description), it will be seen that each screw-shaft has but one crank-shaft, C S, above which are mounted two cylinders tandem fashion. Above the port shaft, are a high-pressure cylinder, C_1, 9 inches in diameter, and an intermediate cylinder, C_2, 18 inches in diameter, while above the starboard shaft are another high-pressure cylinder, C_1, also 9 inches in diameter, and a low-pressure cylinder, C_3, 32 inches in diameter. The stroke in all cases is 22 inches. The intermediate cylinder is surrounded by a receiver, which is divided into two parts, of which the lower is connected to the exhaust pipes, E P_1 and E P C_1, from the two high-pressure cylinders, C_1, C_1, by the steam pipe, S P C_2, to the intermediate cylinder, C_2. The upper part of this receiver is in communication with the exhaust pipe, E P C_2, from the intermediate cylinder, and is also connected by a pipe, S P C_3, with the valve chest of the low-pressure cylinder, C_3. This pipe is fitted with a spring-loaded relief-valve, R V, opening to a pipe which can discharge into the atmosphere any steam passing the relief-valve. There is also a smaller spring-loaded relief-valve, R V, the casing of which has two branches, the one communicating with the upper, and the other with the lower portion of the receiver, surrounding the intermediate cylinder. This arrangement permits steam to pass from the lower to the upper part of the receiver, as soon as the pressure in the lower part exceeds a certain amount.

Course of Steam Under Different Conditions of Working.—(1.) With both engines at work, steam is admitted from the boiler by the steam pipes, S P C_1, S P C_1, and stop-valves, S V, S V, to the valve chests of both high-pressure cylinders, C_1, C_1, while the exhaust steam from them passes down through the exhaust pipes, E P_1, and E P C_1, and steam pipe, S P C_2, to the lower part of the receiver which surrounds the intermediate cylinder, C_2, and passes from thence to the valve chest of that cylinder After having done its work in the intermediate cylinder, it is exhausted into the upper part of the surrounding receiver, and is then led through the horizontal pipe, E P C_2,—S P C_3, to the valve chest of the low-pressure cylinder, C_3, and after doing its work there, it is finally exhausted into the condenser, Co, by the exhaust pipe, E P C_3, in the usual way.

(2.) Suppose the starboard engine to be stopped (by means of the reversing gear, the two throttle valves remaining open) and the port engine to be worked alone. Under these circumstances the steam from the port high-pressure cylinder will

exhaust into the lower part of the receiver surrounding the intermediate cylinder, passing thence into the valve chest of that cylinder, doing its work in the intermediate cylinder, and exhausting into the upper part of the receiver. The starboard engine being stopped there is no escape for the steam through the low-pressure cylinder, so it will accumulate in the upper part of the receiver until the pressure is sufficiently high to raise the large spring-loaded valve, the steam then escaping into the atmosphere.

(3.) On the other hand, if the port engine be stopped and the starboard engine be worked alone, the steam from the starboard high-pressure cylinder exhausts into the lower part of the receiver around the intermediate cylinder, and, there being no escape through the intermediate cylinder valve chest, it accumulates there until the pressure is sufficiently high to lift the smaller spring-loaded valve, R V^1, when it escapes into the upper part of the intermediate receiver, and hence through the connecting exhaust pipe to the valve chest of the low-pressure cylinder, where it is utilised, and finally exhausted into the condenser in the ordinary way.

It will thus be seen that when both the engines are running they are of the triple-expansion condensing type, while the port engine, when running alone, is of the compound non-condensing class, and the starboard engine when working alone, of the compound condensing class. These explanations of the courses taken by the steam under different conditions of working may appear rather complicated to follow, but there is not in reality any complication in the matter, and the spring-loaded valves being automatic in their action the arrangement does not involve any extra work in handling the engines.

Details—Piston, Cylinders, &c.—The high-pressure pistons are fitted with Ramsbottom's rings, and the intermediate and low-pressure pistons with Buckley's rings and springs, the latter being adopted to avoid the necessity for frequent overhauling. It will be seen from the illustrations, that the high-pressure cylinders are mounted on standards or distance-pieces which are cast in one with the top covers of the intermediate and low-pressure cylinders respectively. All the cylinders have their lower ends cast solid with them, and there are no loose liners or steam jackets. The intermediate and low-pressure cylinders are each supported on one side by projections from the condenser which stands between them, while on the side next the sides of the vessel each of these cylinders is carried by an independent standard or column as shown. The bed-plates with the crank-shaft bearings are both bolted to the condenser, so that the two engines form one solid structure.

Valve Motion.—The link-valve motion, L M, is marked by some special features, it having been designed to keep clear of the condenser, which would have been in the way of ordinary double-plate quadrants when working in full gear ahead. To avoid this difficulty, there is bolted to the end of each valve spindle a double-head which carries the quadrants within it, and which enables them to be made much shorter than would be possible with the ordinary arrangement with a solid spindle head between the quadrants. The double-heads on the valve spindles look somewhat massive, as they have of course to be made large enough to allow of the eccentric-rod heads passing between them; but the arrangement seems to answer thoroughly well. The whole of the working parts of the valve gear are made adjustable.

High-pressure Slide Valves.—As will be seen from the views on the folding-page, each valve of the high-pressure cylinders is driven by its valve spindle from a pin guided in a slot of a rocking lever; one end of each of these levers being a fixed fulcrum, while the other is coupled by a connecting-rod to the corresponding lower valve spindle. The high-pressure valves are thus given a travel equal to half that of the valves of the larger cylinders below.

Pumps.—The air, circulating, feed, and bilge pumps (one of each) are worked from the crank-shaft of the starboard engine by eccentrics, the port engine driving no pumps. The air and circulating pumps are each double acting, and are 10 inches in diameter by 10 inches stroke. They are of the pattern in which a plunger works to and fro through a central partition, as shown by Fig. 1, on the folding-page, from which their arrangement will be readily seen. The pumps with these valve chambers form part of the condenser casting. The only packing used for the plungers is water, which is admitted round the plunger where it works through the partition by the apertures shown. This arrangement is found to give excellent results; the pumps work with exceedingly small friction, and the vacuum obtained is quite as good as with pumps having packed buckets. In fact, Messrs. Rankin & Blackmore state that they have repeatedly obtained from 28 to 29 inches vacuum in engines working with steam admitted for three-fourths of the stroke. The section, Fig. 1, just referred to, is taken through the circulating pump which is fitted with india-rubber valves. The air pump is fitted with Kinghorn's metallic valves for both suction and delivery. The feed and bilge pumps are plunger pumps, and are worked by arms from the rods of the circulating and air pump as shown.

Condenser.—The condenser contains 555 solid-drawn brass

tubes, 5 feet long between tube-plates, $\frac{3}{4}$ inches in diameter and No. 18 W.G. thick. The condensing surface exposed being 545 square feet. The tubes are packed with cotton cord and screwed brass glands. The condensing water is forced through the tubes, making three runs of the length of the condenser.

General.—The engines above described have, as we have already stated, been designed for a working pressure of 150 lbs. per square inch, and the boiler provided in connection with them is illustrated and described in Lecture XXIX. The slide valves of the two high-pressure cylinders are set to cut off at three-fourths of the stroke, while those of the intermediate and low-pressure cylinders cut off at five-eighths of the stroke.

The total indicated horse-power was 336, and the consumption of coal was equal to 1·6 lbs. of good steam coal per I.H.P.-hour.

The student should study the several indicator diagrams on the folding-page, with all the attached data, and as a useful exercise he should plot out an enlarged combined-indicator-diagram

Brock's Quadruple-Expansion Engines.—It is unnecessary to go into a description of these engines as a whole, because, with the exception of the cylinders, valves, and connections, the design and arrangements are very similar to those of the best known form of inverted cylinder compound marine engine, such as that described in our lectures. In fact, this quadruple-expansion engine differs only in the substitution of a pair of tandem cylinders for the single high-pressure cylinder, and another pair of tandem cylinders for the single low-pressure cylinder. The main feature, therefore, of this particular design, is the use of four cylinders; the steam being expanded successively in each. By which means increased economy is obtained, due to higher pressures than can be efficiently used in the "triple-expansion" engine.

The use of tandem cylinders enables the four cylinders to be combined with only two cranks, thus saving the multiplication of working parts involved in the three-crank triple-expansion engine.

Such cylinders as hitherto constructed have been attended with considerable drawbacks, notably the double stuffing-boxes required between the cylinders for the piston-rods, and the difficulty of obtaining access to the lower cylinders for examination or repair, without removing the upper ones. This involved disconnecting valve gear, steam-pipes, and other connections, and consequently entailed considerable waste of time and expense to the owners. In the engines under description, it will be observed from the drawings that—

(1) The upper cylinders have no valves or pipe connections fixed to them.

(2) The distributing valves for all the cylinders are in casings attached to the lower cylinders.

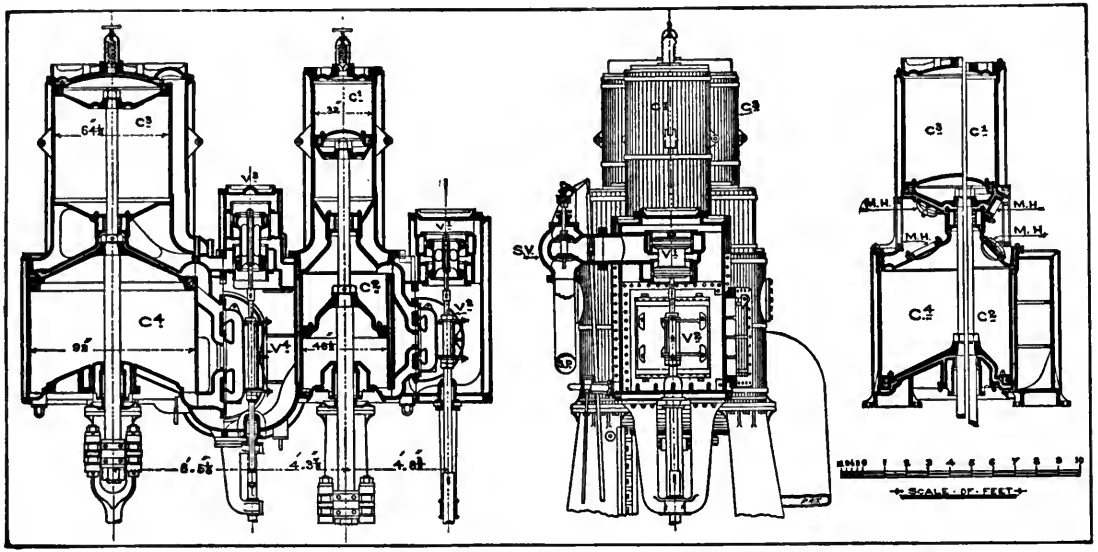

BROCK'S QUADRUPLE-EXPANSION ENGINES, AS FITTED BY MESSRS. DENNY & Co., OF DUMBARTON, TO THE S.S. "BUENOS AIRES."

(3) The number of stuffing-boxes is the same as for an ordinary compound engine, the usual upper tail rod stuffing boxes of such engines being, in this case, represented by the metallic packing for the piston-rods between the two cylinders.

(4) It will also be seen that the upper cylinders, being unencumbered by valve boxes and pipe connections, can be lifted from their place with almost as much facility as ordinary cylinder covers. This is seldom necessary, as it will be observed manhole doors, M H, are fitted in the top or cover of the lower cylinders, by which access is had to their interior, except when the cylinders are too small for this to be done, in which case they are unnecessary, the cylinders themselves being so easily lifted. Two doors opposite each other are also formed in the bottoms of each of the upper cylinders, by which easy access is obtained for examining or overhauling the metallic packing rings of the piston-rods.

The pistons are of cast-steel, formed conical, and of a single thickness of metal. The apices of the cones of the pistons of the upper and lower cylinders are turned towards each other, and the ends of the cylinders being made to fit, sufficient space is thus got between the cylinders for the doors described above, without adding to the total height of the engine. This is clearly shown in the cross-section through each pair of cylinders. It will be observed that the upper cylinders have piston valves, and the lower ones double-ported flat ones of the usual kind, the piston valve and the slide valve for each pair of cylinders being contained in the same casing. The high-pressure cylinder, C^1, and second cylinder, C^2, have one piston valve, V^1, and one slide valve, V^2, mounted on the same spindle, while the third, C^3, and low-pressure cylinder, C^4, have two piston valves, V^3, and two slide valves, V^4 (there being two valve spindles united by a crosshead underneath the stuffing-boxes). The piston valves, V^1 and V^3, are withdrawn when required, by removing the covers provided on the top of the casings.

The lower valves, V^2 and V^4, are arranged so as to slip off their spindles without the latter requiring to be disconnected, and are withdrawn with great facility when required, by doors provided at one side for the second cylinder, and at both sides for the low-pressure cylinder, all as clearly shown by the drawings.

The upper piston of each piston valve is made larger in diameter than the lower, by which means, as the entering steam is between the pistons, the weight of all the valves and gear is balanced, or as much so as may be desired.

The course of the steam through this engine is pretty clearly shown, or can easily be inferred from the figures, but it may be briefly described as follows:—

The steam from the boiler passes to the engine by a steam-pipe, S P, and stop valve, S V, and then enters by a passage formed between the two pistons of the high-pressure cylinder valve, V^1, from whence it is distributed in the usual way to passages leading to the top and bottom of cylinder, C^1. In this way, the only parts of the engine exposed to the full boiler pressure, are the small part of the valve casing between the pistons of the high-pressure valve, and the high-pressure cylinder itself.

The steam, on leaving this high-pressure cylinder, exhausts over the ends and down the centre of the piston valve, V^1, direct into the casing beneath for valve, V^2. This casing is made of considerable capacity in order to form a receiver between the two cylinders. The object of this is to enable the steam admission to the second cylinder to be closed sufficiently early to prevent the exhaust pressure in the high-pressure cylinder from falling too low. This was a great defect in the old double cylinder or "Woolf" compound engines, in which the exhaust pressure of the high-pressure cylinder was nearly as low as the final expansion pressure in the low-pressure cylinder, involving much larger ranges of temperature than was necessary.

From this casing the steam is distributed to the second cylinder in the usual way, and is then exhausted into a receiver cast round the second cylinder, as is usual in the high-pressure cylinder of ordinary compound engines. From thence, by suitable passages, it reaches the space between the pistons of the piston valves, V^3, of the third cylinder, and so on as described, for the first pair of cylinders, until it is exhausted into the condenser.

The following set of indicator diagrams have been reduced by photography from tracings of the originals that were taken from the cylinders of the S.S. *Buenos Aires* on the second trial trip run. The diameters of the cylinders were $C^1 = 32''$, $C^2 = 46\frac{1}{2}''$, $C^3 = 64\frac{1}{2}''$, and $C^4 = 92''$, each with a 5-foot stroke. Steam was supplied at 169 lbs. by gauge, the vacuum was $25\frac{1}{2}''$, and the mean revolutions 68 per minute, which gave a total I.H.P. of 4,318, as shown by the sum of the indicated horse-powers of the four cylinders.

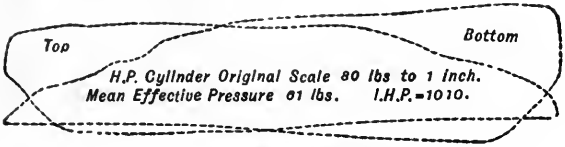

This Scale 180 lbs.=1 inch

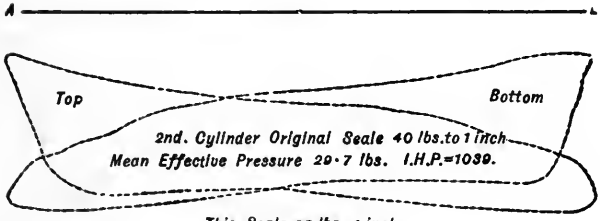

This Scale 86 lbs.=1 inch

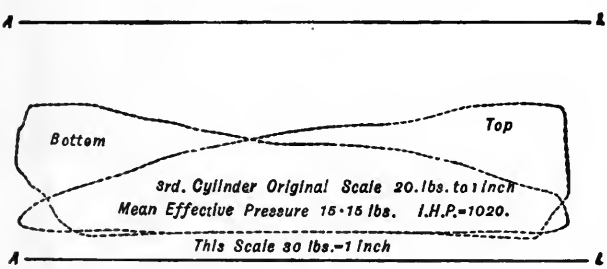

This Scale 30 lbs.=1 inch

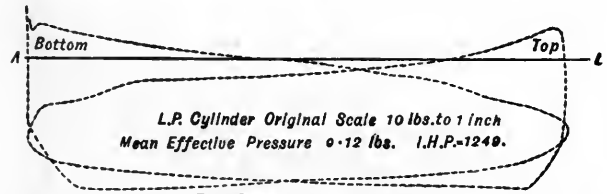

This Scale 10 lbs.=1 inch

INDICATOR DIAGRAMS TAKEN FROM THE FOUR CYLINDERS OF THE S.S. "BUENOS AIRES" ON THE TRIAL TRIP.

Quadruple Expansion Engines of the S.S. "Inchdune" and "Inchmarlo." *—It will be seen from the two plates in this lecture and the "Crank effort diagram" in Lecture XVIII. that the engines of the S.S. "Inchdune" have been constructed with the two special objects of economy in steam and freedom from vibration.

General Description.—They have five cylinders of diameters 17, 24, 34, 42, and 42 inches respectively, whilst the length of stroke in each case is 42 inches.

The engines are of the quadruple expansion type, with two low-pressure cylinders.

The admission valve of the high-pressure cylinder is of the piston type, whilst all the others are ordinary, flat slide valves.

All the cylinders are fitted with liners, which permit of steam-jacketing the sides, tops, and bottoms, with the exception of the high-pressure cylinder, which is lined, but not steam-jacketed. Each cylinder is entirely covered with a thick lagging of good non-conducting material. The material on the cylinder tops is composed of asbestos blankets which are protected by iron casings, and so adjusted that they may be easily removed.

The front supporting columns are made of wrought iron. The high-pressure, first intermediate, and the first of the two low-pressure cylinders are supported at the back on columns which are cast as part of the condenser, while the second intermediate and second low-pressure cylinders rest, as usual, upon cast-iron columns of box section fitted to the bed plate.

There are ten main bearings carrying the crank shaft, which is made up of five interchangeable parts. The cranks are set at equal angles. The engines are designed so as to have light reciprocating parts, with equal weights on each crank pin, thus reducing initial stresses on the bearings, by dividing the total work between five cranks at five equal points around the crank circle.

The first and chief cause of steam economy in these engines may be traced to the efficient manner by which the superheating of the steam for the cylinders and the air for the furnaces was effected, as well as the special way in which the steam jackets were drained. The description of the boilers will be left to the lecture dealing with marine boilers, but the special features of the superheaters, air heaters, and jacket water traps will now be considered, as these have more direct reference to the steam economy in this case.

* Tested by my old and much-esteemed student, the late William C. Borrowman, M.Inst.C.E., Wh.Sch., with the following excellent results. I was indebted to him and to *Engineering* for their kind assistance and permission to reproduce the data and drawings (see Folding Plate, Figs. 1, 2, also Figs. 3 to 9).

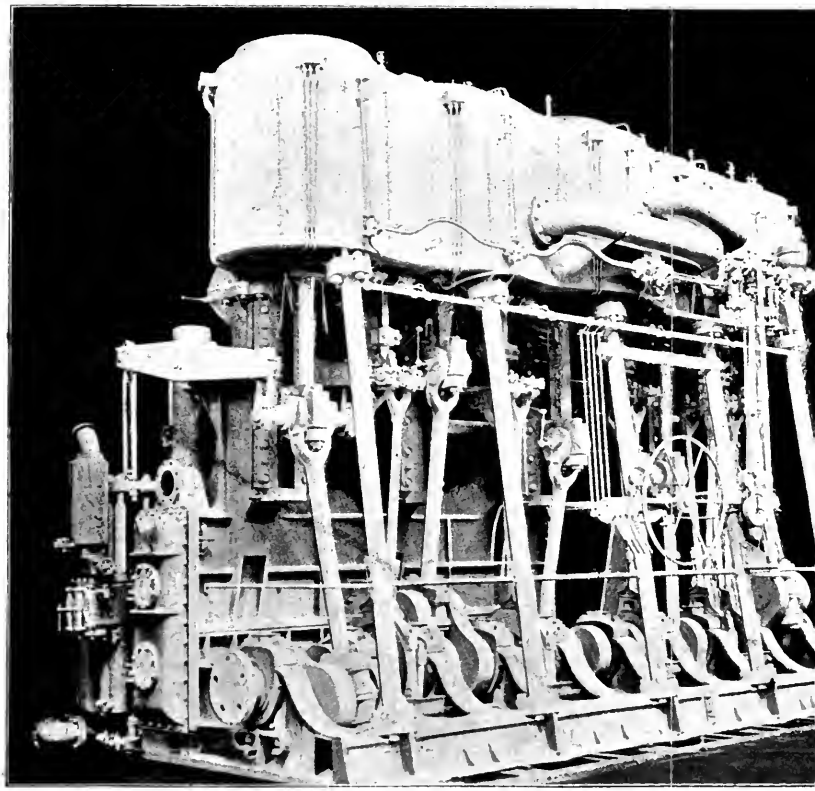

Fig. 1.—Front Elevation.

Five-Cylinder Quadruple-Ex
Designed and Constructed at TH
For further Deta

[*To face p.* 446.

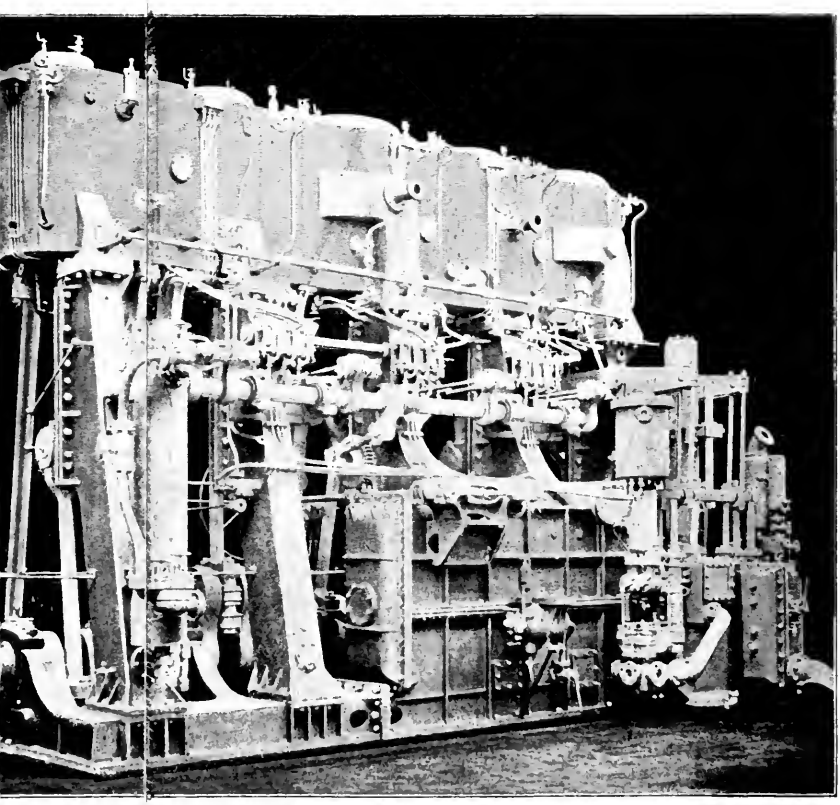

Fig. 2.—Back Elevation.

"Inchdune" and "Inchmarlo."

ENGINE WORKS, West Hartlepool.

n, see Lecture XVIII.

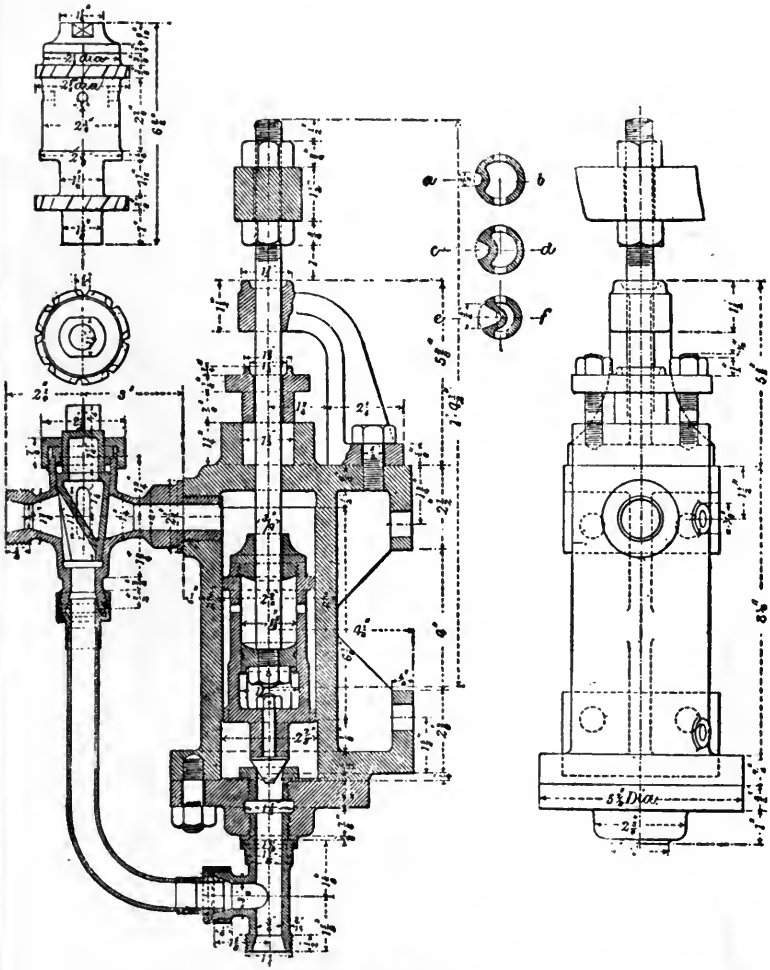

FIG. 8.—END VIEW AND SECTIONAL ELEVATION, SHOWING DETAILS OF THE "CENTRAL" CONDENSED STEAM TRAP FOR S.S. "INCHDUNE."

Trapping the Condensed Steam from the Cylinder Jackets.—Superheated and high-pressure steam have their own special sources of loss, and, if these are not guarded against most carefully, it is just possible that they may quite equal the calculated gains. In connection with the steam jacketing of the cylinders, one very important point to be considered in aiming at economy, is the trapping of the condensed jacket steam. Hitherto this has been a source of great waste, as, when the steam traps are not in working order, steam as well as the condensed water escapes. The "Central" steam trap may be described as a positive action trap, for it depends on its action upon a reciprocating internal piston, lifting its valve from its seat by means of the water which it traps. If no water has accumulated in the trap, then no lift takes place, because the piston is in equilibrium. Whereas, if water fills it, the difference of pressure on the two sides of the piston, due to the head of water, must lift the piston with its valve. The efficient working of these traps was proved on the trial trips by the dryness of the jackets and the low temperature of the water in the collecting chamber. The one showed that no water was lodging in them, and the latter that no steam was passing into the drain pot from the steam jackets. The accompanying folding-plate of these engines clearly shows on Fig. 2 where nine of these steam traps are fitted, and Fig. 8 gives full details of their construction and action.

Indicator Diagrams and their Combined Results.—The following full-page figure gives a series of diagrams for all the cylinders, taken on a trial run, together with a combined diagram reduced to the low-pressure cylinders. It will be seen from the diagrams, that there is some wire-drawing in the first cylinder, due no doubt to the contracted tubes of the superheater. The dotted areas in the combined diagram follow very closely to the adiabatic curve, $p\,v^{1\cdot 5}$, down to the low-pressure diagram, after which they conform more closely to Prof. Rankine's formula of $p\,v^{1\cdot 1}$ for the expansion of saturation (see Lecture XV.). The total area of the actual diagram is 87·9 per cent. of the standard area of reference, A B C D E, taken between the upper and lower limit of pressures, as registered by the indicator cards. The horse-powers developed in the various cylinders are printed at the side of each set of indicator cards, but it must be noted, that no attempt was made to balance the horse-powers of the engines when these diagrams were taken, which was the case in those depicted upon the crank-effort diagrams.

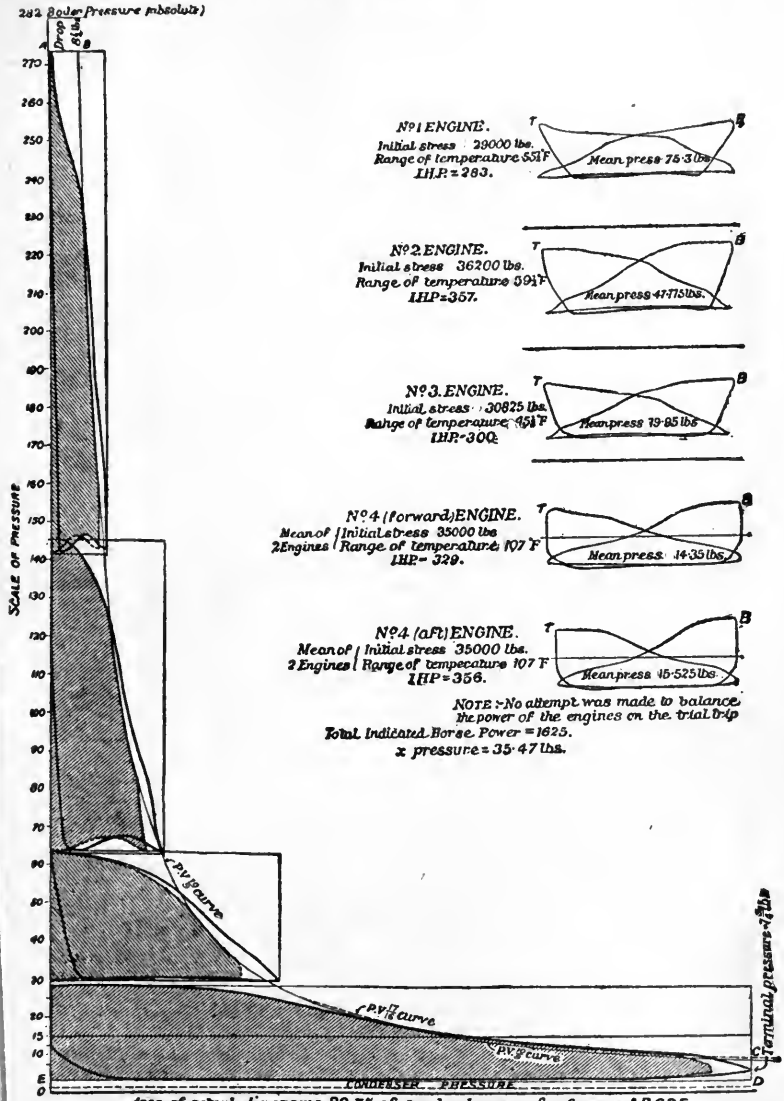
282 Boiler Pressure (absolute)
Drop 25 lbs.
SCALE OF PRESSURE
No 1 ENGINE.
Initial stress 29000 lbs.
Range of temperature 55° F
I.H.P. = 283.
Mean press 75·3 lbs.
No 2 ENGINE.
Initial stress 36200 lbs.
Range of temperature 59° F
I.H.P. = 357.
Mean press 47·715 lbs.
No 3 ENGINE.
Initial stress 30825 lbs.
Range of temperature 45° F
I.H.P. = 300.
Mean press 19·85 lbs.
No 4 (forward) ENGINE.
Mean of 2 Engines
Initial stress 35000 lbs.
Range of temperature 107° F
I.H.P. = 329.
Mean press 14·35 lbs.
No 4 (aft) ENGINE.
Mean of 2 Engines
Initial stress 35000 lbs.
Range of temperature 107° F
I.H.P. = 356.
Mean press 15·525 lbs.
NOTE:—No attempt was made to balance the power of the engines on the trial trip
Total Indicated Horse Power = 1625.
x pressure = 35·47 lbs.
PV^1.3 curve
PV^1.4 curve
PV^1.3 curve
CONDENSER PRESSURE
Terminal pressure 4·7 lbs
Area of actual diagrams 89·7% of standard area of reference A.B.C.D.E.
taken between upper and lower limits of pressure registered by indicators.

FIG. 9.—A COMPLETE SET OF INDICATOR CARDS AS TAKEN ON A TRIAL RUN FROM THE ENGINES OF S.S. "INCHDUNE."

Lecture XXIII.—Questions.

1. Explain how greater economy of coal may be obtained by the triple-expansion engine than by a simple condensing, or by a simple compound engine. Give any authentic instances of the exact consumption of coal per I.H.P. per hour, by the three kinds of engines.

2. Work out in full and tabulate the maximum theoretical efficiencies due to using steam of different pressures, from atmospheric pressure to 300 lbs. pressure per square inch; also draw an efficiency curve from your results, to a scale of 1 inch = 50 lbs. pressure, and 1 inch = 10 per cent efficiency.

3. To what causes do you attribute the difference between the maximum theoretical efficiency from using steam of high-pressure and the efficiency actually obtainable in a steam engine even of the best known type?

4. What good reasons have you for supposing that the practical limits of economy and safety have been nearly reached in the direction of high-pressure steam and multiple expansion in marine and other engines? In what other directions must engineers now turn their attention in order to attain greater economy of coal and steam?

5. Make a section through the cylinders and slide valves of a *tandem* engine, where the two pistons are on the same rod, and the steam exhausts directly from the high- to the low-pressure cylinder.

6. Sketch and describe fully by an index of parts any form of triple expansion, marine, or other engine with which you may be acquainted.

7. Give complete freehand sketches through the cylinders and slide valves of Brock's patent quadruple-expansion marine engines. Explain in your own words the complete action and the advantages of this arrangement of cylinders and valves.

8. Reduce the indicator diagrams from the four cylinders of the S.S. *Buenos Aires* to one scale, as explained in Lecture XVI. Find the percentage difference of work done in one stroke between the combined area from these four reduced diagrams and the total area included by a curve drawn to the formula $p v^{\frac{10}{9}}$.

9. What would be the probable consumption of fuel per I.H.P. per hour in the most approved "simple-condensing" and "triple-expansion" engines respectively? State succinctly what are the differences, if any, in the initial or boiler pressures, in the grades of expansion, and in the construction of the slide valves of each cylinder of the triple engine, as compared with the single form, in order to obtain higher efficiency in the compounded engine. What reasons do you assign for the better result in the compound engine?

10. Sketch and explain fully by an index of parts any form of quadruple-expansion engine with which you may be acquainted. What advantages are claimed for such engines when arranged on the five-crank design?

11. Explain, by aid of sketches, the construction and action of the "Central" superheater with Ellis and Eaves' induced draught.

12. Show how the economy of a jacketed engine is improved by trapping the condensed steam from the jackets. Sketch and explain the construction and action of an efficient "condensed steam trap." In what respects do several designs of condensed steam traps fail to act, and how would you test them for efficiency?

LECTURE XXIV.

CYLINDERS AND SLIDE VALVES.

CONTENTS.—Details of Engines—Cylinders—Old D Slide Valve—Ordinary or Locomotive Slide Valve—Double-Ported Slide Valve—Gridiron Slide Valve—Thom's Patent Double-Ported Trick Valve—Piston Valve—Reversing Link Motion—Questions.

Details of Engines—Cylinders.—The necessary size of cylinder for any engine may be calculated by the formula relating to horse-power given in Lecture XVII., but in order to impress the method clearly on the memory of the student, we here repeat the formula in a more extended form.

Let D = Diameter of the cylinder in inches.
p = Mean pressure of steam in lbs. per square inch.
S = Speed of the piston in feet per minute.
H P = Horse-power which the engine is required to indicate.

Then, since the area of the cylinder $= \pi r^2 = \frac{\pi}{4} D^2$

We have— $$H P = \frac{p \times \frac{\pi}{4} D^2 \times S}{33{,}000}$$

And: $$D = \sqrt{\frac{H P \times 33{,}000}{p \times \frac{\pi}{4} \times S}} = \sqrt{\frac{H P \times 42{,}016}{p S}} = 205 \sqrt{\frac{H P}{p S}}.$$

Cast-iron is the material universally employed for the construction of steam engine cylinders. The inside of the cylinder barrel is usually fitted with a thin liner, which is made of a hard close-grained material capable of taking on a high polish and withstanding the rubbing action of the piston. If the liner becomes much worn, it may be taken out and replaced by a new one at a very small expense, or it may be re-bored if only slightly worn. In small engines it is not usual to fit the cylinders with liners, but the metal of the cylinder barrel is made thicker than is necessary, so that when the cylinder becomes much worn, it may be re-bored, and fitted with a new piston. When the cylinder is to be steam jacketed, a liner is now always employed, and steam is circulated round the annular space between the cylinder barrel and the liner. Liners are

usually constructed of hard cast iron; but recently compressed steel liners, as manufactured by Sir Joseph Whitworth's patent process, have been largely employed, and have given satisfactory results. The method of fitting in these liners will be readily understood by reference to the diagram, p. 360. The interior of the cylinder barrel has a fitting strip at each end, which projects from $\frac{1}{2}$ in. to $\frac{3}{4}$ in. above the interior surface of the barrel itself; and these strips are bored out so as to fit exactly two similar strips on the external surface of the liner. The annular space between the liner and the cylinder barrel is therefore from 1 in. to $1\frac{1}{2}$ in., and the hot steam from the boiler is passed round this space. The liner is usually fixed in by an internal flange on its lower or inner end, which is sometimes recessed into a space in that end of the cylinder, and is attached to the cylinder end by screwed pins. To prevent waste of steam, it is necessary that the joints between the liner and the cylinder barrel should be steam tight, and at the inner joint this may be effected by the use of red lead, when the liner is being fixed in its place. At the back or upper end, however, a small groove is usually bored out at the joint immediately above the fitting strip, and this groove is packed with soft rope, asbestos, or some of the other packings in general use. The packing is kept in position by a thin wrought-iron ring which is fixed to the top of the liner. A very simple and efficient plan, is to caulk a thin copper ring into a space bored out for it above the fitting strip.

One of the ends of a steam engine cylinder, called the cover, is always bolted on, whilst the other is cast along with the cylinder barrel. Usually it is the back or upper end which is separate from the cylinder barrel. In large engines, and all jacketed engines, this cover is made hollow, and the flat sides are connected by ribs. In small engines, it consists simply of a circular plate of metal. This cover is held down by studs, which are screwed into a flange on the cylinder barrel, and are sufficiently strong to resist the full initial pressure of the steam acting on the area of the cover. The pitch of these studs must not be too great, since it then becomes difficult to keep the joint steam tight.

Relief valves are usually fitted to the cylinder cover and cylinder end, and consist of simple mushroom valves loaded with springs. (See figs., Lectures XXI. and XXII.) Their function is to allow a means of escape for the water which collects in the cylinder, either by the "priming" of the boiler, or by condensation of steam. When the piston approaches the end of its stroke, it forces the water which may have collected in the cylinder into the clearance spaces; and if there is more than sufficient water

to fill the clearance spaces, the pressure put upon it opens the relief valves, and allows it to escape.

The steam ports and passages are almost always cast along with the cylinder barrel, and in small engines, the valve casing also forms part of the same casting. In large engines, however, the valve casing is bolted on. The face of the steam and exhaust ports, against which the slide valve works, is usually planed and scraped up to a true plane surface, so that it may form absolutely steam tight contact with the valve. Sometimes a valve face of a specially hard cast-iron is fixed on to the face of the steam ports (as shown in the next two figures) to prevent excessive wear. It is generally attached by small screws, the heads of which are sunk below the flush of the valve face. In some few cases, bronze valve faces have been used; but these, although forming a good surface for the valve to work against, cannot be recommended, because when so fixed the bronze warps, due to its greater coefficient of expansion by heat.

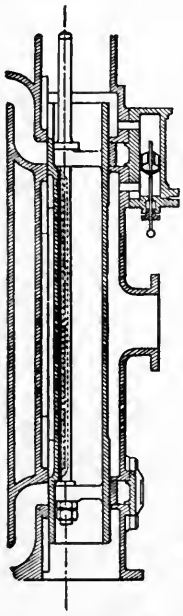

Long D Slide Valve.

Old D Slide Valves.—The action of the ordinary slide valve and the method of determining its principal dimensions were fully explained in Lecture XIV. We now purpose to illustrate a few of the forms of valves which have been or are in common use at the present time.

The first form of slide valve was that known as the D valve, from the resemblance of its cross section to the letter D, and it is shown in the annexed diagram. This valve consists of a long semi-circular pipe, the flat side of which slides against the face of the ports, whilst the circular part moves steam tight against packing at each end. Steam usually enters at the valve casing by the pipe with the throttle valve, shown in the diagram; and is prevented from passing to the ends by the steam tight packing. Both ends of the casing in which the valve works are in direct communication with the condenser, so that when the valve moves up sufficiently, the inner edge of the upper steam port is opened to steam, while the lower steam port is opened to exhaust; and *vice versâ* when the valve moves in the opposite direction.

Locomotive Slide Valve.—The valve which is in general use for

small engines at the present time, and is generally known as the "locomotive slide valve" or ordinary three-ported valve, was illustrated in Lecture XIV. (see also diagram of Joy's valve gear, Lecture XXI.; the triple-expansion engines, Lecture XXIII.; and of the locomotive, Lecture XXVI.). The great objection to a valve of this form is the large amount of power which is absorbed in moving it. The valve is subjected to the full initial pressure of the steam acting over its whole area, and is, therefore, pressed against the face of the ports with very great force, thus offering very considerable frictional resistance to motion. Many plans of relieving the valve from back pressure have been devised, and several are used in practice, but none of them have proved thoroughly satisfactory. The power required to move a slide valve depends upon the size or area of the valve, the pressure of the steam in the valve casing, and the length of travel of the valve.

Double-Ported Slide Valve.*— In large engines, therefore, especially when working with high pressures, the power absorbed

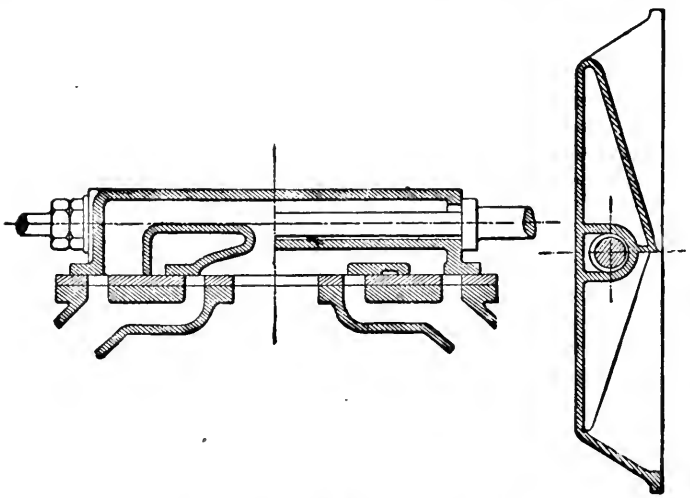

COMMON DOUBLE-PORTED VALVE.

in moving the slide valve becomes a very considerable item; and in order to reduce this absorption of power, double-ported valves have been commonly adopted. They aim at lessening the

* Cardboard models of various forms of valves are published by Mr. Jones, of Manchester.

expenditure of power in moving the valve by a reduction of its travel. It will be seen that there are two steam openings leading to the one steam port at each end of the cylinder, which are opened and closed by the slide valve. The upper opening gets steam from the valve casing direct by its upper edge, and exhausts round a passage at the back of the valve into the exhaust port; the inner opening gets steam from the valve casing through a transverse opening in the slide valve, and it exhausts directly into the exhaust port. A valve of this kind thus gives the same opening to steam as an ordinary locomotive slide valve with half the travel, and this would entail just half the expenditure of power in moving it, if the valve was of the same size; but owing to its construction it is always somewhat larger than an ordinary valve doing the same work. There is, however, a considerable saving in power on the whole in the case of large steam cylinders by using this form of valve instead of the ordinary one, and hence its adoption in practice.

Gridiron Slide Valve.—Slide valves in which the steam port opening is divided into a number of narrow slits, in order to still further reduce the travel of the valve to a minimum, are known as "*gridiron*" valves, and were at one time commonly used as expansion or "cut-off" valves, being placed between the steam pipe and the main slide valve.

Thom's Double-Ported Trick Slide Valve.—This form of slide valve combines in one casting what is known as the "Trick' arrangement, applied to a valve having positive and negative exhaust lap at both ends of cylinder. The negative exhaust lap forming a communication between the opposite ends of the cylinder just before the exhaust opens to the condenser, as shown by the arrows, when the piston is in position, marked "communication open between ends of cylinder" so that the steam at its terminal pressure is transferred from one side of the piston to the other, compressed nearly up to initial pressure, and used over again on the return stroke. This valve can be adapted to suit either single-, double-, or triple-ported steam cylinders. The illustrations show it as applied to an ordinary double-ported marine engine cylinder. The port openings marked, A_1, A_2, are only used for exhausting, whilst those marked, B_1, B_2, are for steam and exhaust. Steam enters at both ends of the valve simultaneously, as shown by the arrows, similar to an ordinary "Trick" valve, but the ports, B_1, B_2, being wider than A_1, A_2, the full advantage of the steam coming through the passage in the back of the valve is obtained. It may also be adapted to suit the ports of an ordinary slide valve with equal width of ports.

In the first place, an amount of steam is saved in each revolution of the engine equivalent to the capacity of the steam ports, and clearance between the ends of the cylinder and piston, which in many cases is fully 5 per cent. of the total steam used, in addition to transferring the steam necessary to heat the cylinder after being cooled by communication with the condenser.

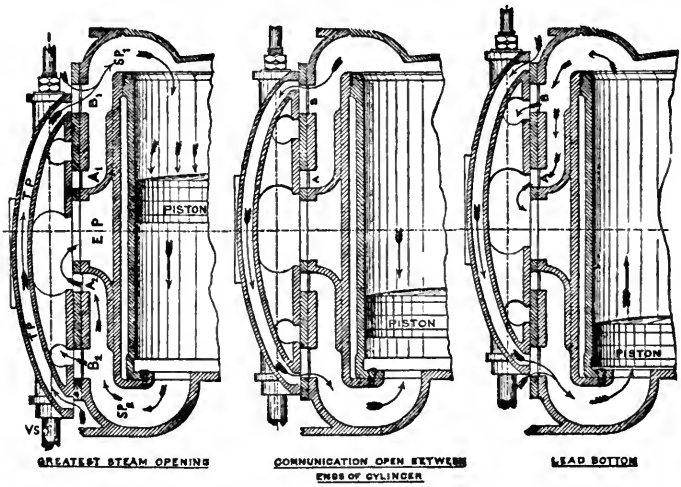

THOM'S DOUBLE-PORTED TRICK VALVE.

In the second place, with the ordinary slide valve, provided the vacuum is good and steam ports large enough, there is nothing or very little to compress in the low-pressure cylinder, and thus severe shocks are imparted to the several joints and moving parts. But, by the adoption of this arrangement of valve, the steam is taken from the other end of the cylinder, after performing all the work possible, and compressed *nearly* up to initial pressure, using the work stored in the piston for this purpose, so that there is a far less shock consequent on changing the direction of the motion of the piston, and more revolutions (the inventor asserts) can be got out of the engines with the same indicated horse-power.

As the change of pressure from the one side of the piston to the other passes through the stages—(1) release by communication opening; (2) compressing steam transferred; (3) exhaust opens to condenser; (4) steam at initial pressure enters—it is obvious that the engine turns the dead points with far less shock, than in

the ordinary arrangement of slide valve, where it is sometimes necessary to give great lead to the low-pressure valve, especially on the bottom centre, to arrest the momentum of the vertically moving parts. As, however, in the use of this valve, the work stored in the piston and other moving parts is used to compress steam taken from the opposite end of the cylinder, and is not thrown away against the steam admitted by the lead of the valve, as in the ordinary arrangement, no lead of the valve is necessary as here used, and the engine turns the centre without knocking, even if the brasses are rather slack.

A further advantage in the use of this valve lies in its being lighter than the ordinary double-ported slide valve, and taking up less space in depth, which enables it to be more easily overhauled. By its use, the friction on the cylinder port face is greatly reduced by the fact, that one port is always exposed to the pressure in the cylinder, thereby tending to reduce that on the valve face.

Piston Valve.—As we remarked before, no thoroughly satisfactory plan has yet been devised for relieving the ordinary slide valve from the pressure of steam upon its back surface; consequently, we find that now with the very high steam pressures carried in marine and other boilers (about 100 lbs. for compound, 150 lbs. for triple, and 180 to 200 lbs. on the square inch for quadruple-expansion engines), it has become absolutely necessary, in the case of large engines, to adopt another form of valve for admitting and exhausting the steam from the high-pressure cylinders. This form of valve is known as the piston valve, and we illustrate one fitted with Thom's "trick" arrangement for producing sufficient compression on the exhausting side of the piston to turn the dead points smoothly, and to economise steam as explained above. It consists of two pistons, P_1, P_2, of cast iron, connected together by a cast-iron pipe and fixed to the valve spindle, V S, as shown. These pistons fit and work in liners, L_1, L_2, inserted into the ends of a cylindrical chamber, C C, bolted to the side, or to the end of the high-pressure steam cylinder. They are suitably packed with expanding rings, R_1. R_2, R_3, R_4, like locomotive piston rings, which are frequently made of bronze. The pistons, P_1, P_2, open and shut the two steam ports, S P_1, S P_2, from the steam chest, and the exhaust port, E P, in the same way as an ordinary slide valve does; but the area of steam port is much larger than that of an ordinary slide valve of the same size across, and there is no unbalanced pressure owing to its cylindrical form, hence no frictional wear and tear except that due to the pressure of the expansion rings, R_1, R_2, R_3, R_4. To prevent these expansion rings from springing

outwards beyond the bore of the liners, L_1, L_2, when they come opposite the steam ports, $S P_1$, $S P_2$, the faces of the steam ports

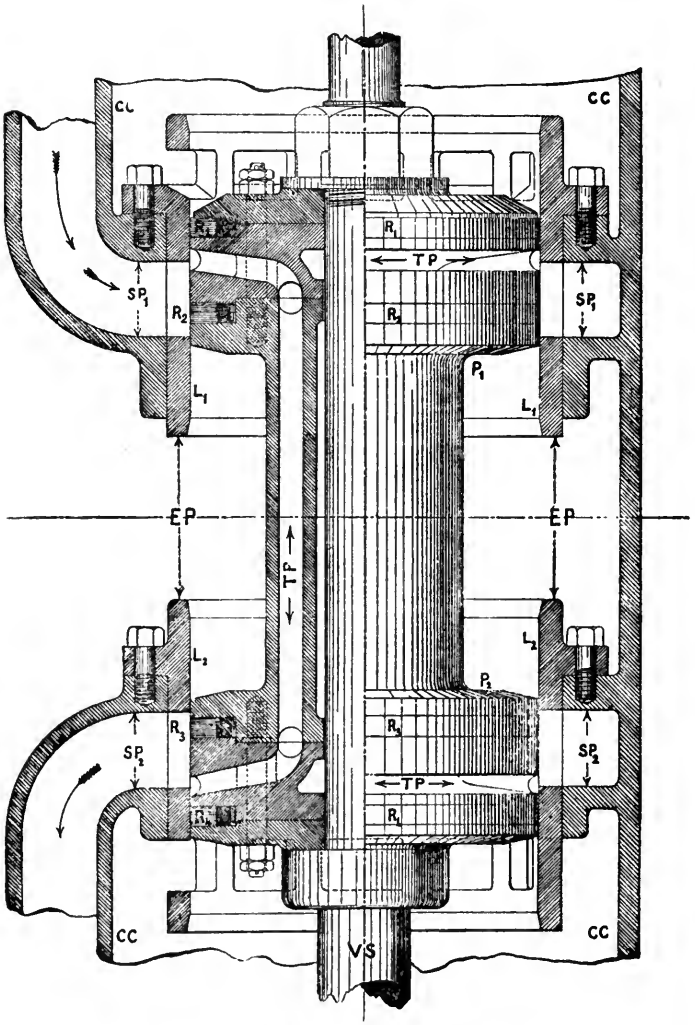

THOM'S PISTON VALVE.

in the liners are cast diagonally so —•W. With piston valves, the clearance spaces are naturally rather larger than with the ordinary slide valve, but this is minimised as much as possible by keeping the pistons, P_1, P_2, as far apart as practicable. The trick pipe or passage, for communicating with both ends of the valve, in order to effect the necessary compression when the piston comes near the ends of the cylinder, is seen at, T P. In large vertical piston valves, there is a small balance piston with cylinder (similar to B P, p. 406), fitted to the upper end of the valve spindle, in order to support the weight of the valve, valve spindle, eccentric rods, and links. Piston valves can be made lighter than ordinary slide valves, but they are essentially single-ported valves, and have therefore as a rule a longer travel than double-ported slides. One would have expected that with piston valves, much lighter valve spindles, links, and rods could have been used than with ordinary slide valves doing the same work; but this does not appear to be the case in practice. Piston valves are sometimes fitted with expansion piston valves inside the main valves. Their construction is similar to the latter, but the arrangement is somewhat complicated and difficult to get at for adjustment and for repairs. All the latest Transatlantic Liners, as well as many of the best passenger steamers, have been fitted with piston valves. The only objection or disadvantage usually urged against these valves, is their first cost, which naturally prevents their being commonly fitted to the low-pressure cylinder of compound, or of multiple expansion engines.

Reversing Link Motion.—The reversing of an engine which has ordinary slide* or piston valves, is most easily affected by means of a combination of links and rods, which is known as "*link motion.*" In order that an engine may work in both directions, the eccentric which moves the valve must always remain at a given fixed angle in advance of the crank; and evidently with one eccentric fixed on the shaft, the position of this advance is dependent upon the direction of rotation, and is not the same when the engine rotates in either way. The arrangement by which the desired object is attained with link motion is as follows:—Two eccentrics are fitted to the crank shaft side by side, the one being set in such a position relative to that of the crank, as to control the valve properly when the engine is going in one direction, and the other in a position to control the valve when the engine is rotating in the opposite direction. These eccentrics are connected by separate eccentric-rods and straps to the ends of a link, in which a block connected to the

* We have already described and illustrated the reversing motion for an Oscillating Engine and Joy's Valve Gear in Lecture XXI.

valve-rod is fixed, and which is capable of sliding from end to end. When the link is drawn to the one side, the block being stationary, comes into line with one of the eccentric-rods, and the valve is worked by that eccentric to which this rod is attached. If the link be pushed over to the other side, the other eccentric comes into play with the valve, and the engine rotates in the opposite direction. If the link be placed in such a position that the block which is connected to the valve stands in the middle of the link, then the engine stops, since the valve is thereby placed in mid-position, and simply travels to and fro over the valve port face, a distance nearly equal to the lap plus the lead.

The construction of these links is very various. One form is shown in the following figure.* It is a very simple form, and

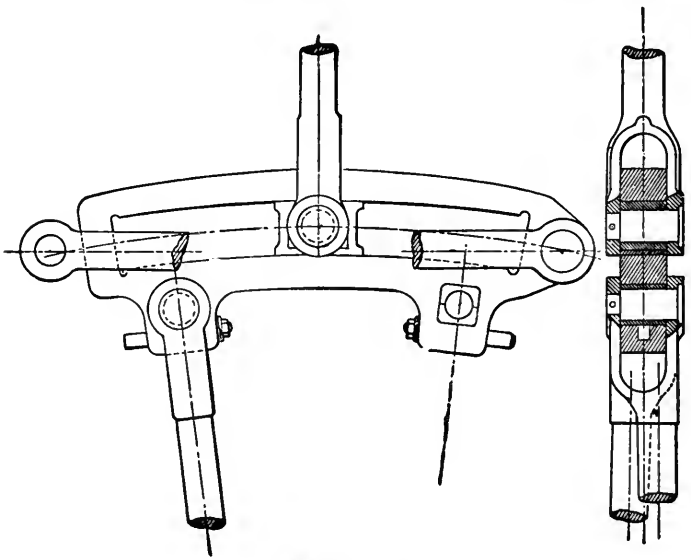

THE SLOT LINK.

has been used for small engines for many years. It consists of a flat piece of iron with a circular slot in it, in which a block attached to the valve-rod is fitted. This block is able to slide lengthwise along the link. The link has two snugs formed on one side for the attachment of the eccentric-rods; and also a

* Other forms are illustrated in Seaton's *Manual of Marine Engineering*, and in the author's Elementary Manual, Lecture XXIII.

snug at one end, by which the link is hung, and may be moved back and forward so as to bring the valve-rod over one eccentric-rod or the other. This link gives a more irregular motion to the valve than some of the other forms, although it works on the whole fairly well; but it is more difficult to adjust when it becomes worn.

Other Forms of Valve Gear.—In addition to the Stephenson link motion just described, and the Joy's valve gear described in Chap. XXI., there are a large number of valve gears that have been successfully employed in practice. The Walschaert gear, which is gradually replacing others in locomotive design, is described and illustrated in Chap. XXVI. We will at this juncture explain to the student a point which holds in connection with many of the questions dealt with in this book; it is that engineering is not a fixed science, and that in practice there is scope for considerable variation and individuality in design. Valve gears, for instance, may be divided broadly into types, but of each type there are a very large number of variations in practical construction; there is a danger that a student, in learning rules and formulæ that are intended as guides in design, may think that it is essential to follow these rules slavishly instead of bringing his own originality to bear upon the production of the best practical design.

Hackworth's Radial Gear.—Hackworth's radial valve gear was patented in 1859, and is the prototype of the Marshall, Bremme, and other valve gears which have been employed extensively in marine engine design.

Its distinguishing feature is that it employs only one eccentric, and that this eccentric is set directly opposite the crank and approximately at right angles to the stroke of the engine. This eccentric C D ends in a block D, which slides in a guide slot, which is capable of being tilted from the full forward gear position 1 to the mid-gear position 2, and then to the full backward gear position 3. At a point F on the eccentric is pivoted a link F G connected at its end G to the valve rod; the point F describes an oval curve approximating to an ellipse.

The motion of the valve is very exact for both strokes and for all degrees of expansion, but in practice it has been found that the wear of the sliding block and guide slot was considerable and led to objections.

This objection has been obviated in several of the valve gears which have been evolved from the Hackworth type by replacing the guide slot construction by a suspension link; this modifi-

cation destroys to some extent the uniformity in the motion of the valve, but this drawback is not so serious in practice as that due to the wear caused by the guide-slot construction.

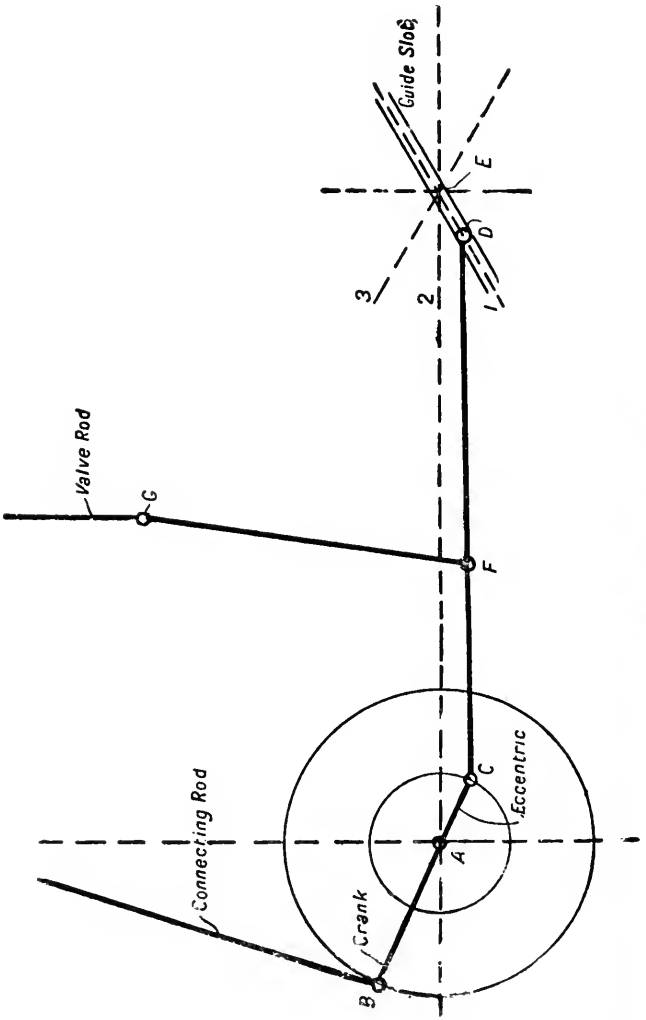

HACKWORTH'S VALVE GEAR.

LECTURE XXIV.—QUESTIONS.

1. How would you calculate the necessary diameter of a cylinder in order to produce a certain horse-power?

2. Sketch in section, and describe a cylinder cover for a large marine engine.

3. Sketch a section through the cylinder of a powerful marine engine, showing a jacket, liner, the ports and passages, and slide valve with casing. How is the liner attached and fitted? Describe the process of making a liner of compressed steel.

4. Sketch in section a long D slide valve having lap on the steam side, together with the steam ports and passages. Explain the action of the valve, and show the manner in which the exhaust steam is passed to the condenser.

5. Describe a D slide valve without *lap*. Sketch the valve and ports, placing the valve in the middle of its stroke. Then show what you mean by giving *lap* and *lead* to the valve.

6. Draw a section of a locomotive slide valve and ports, showing the valve, (1) without lap, (2) with lap.

7. Describe the three-ported valve. How is the valve prepared and faced so as to be fitted for use? Sketch the valve and ports in section. Put the valve at middle of its stroke.

8. Sketch in section and describe a slide valve suitable for a double-acting engine, together with the steam ports or passages leading to the top and bottom of the cylinder. Be careful to show the manner in which the valve provides for the escape of steam. If the engine is single-acting, as in the case of a steam hammer, how should you alter the valve and the ports?

9. In marine engines with large cylinders it often becomes necessary to diminish the travel of the slide valve while keeping a considerable opening of the ports for the admission of steam. Sketch a section through a valve and ports, showing how this can be done, and put the valve in its position at the commencement of the stroke of the piston.

10. Sketch in section the slide valve and ports of a cylinder fitted with a double ported valve having a relief ring or frame at the back, and explain the object of this construction.

11. Sketch a double-ported slide valve, with a relief ring at the back of the valve. Show also in section the ports in the cylinder with the valve in the position it would have when the piston is at the end of a stroke. Describe the operation of setting the slide valve of a marine engine.

12. Under what circumstances are balanced slide valves employed? Sketch and describe a balanced slide valve for the high-pressure cylinder of a triple-expansion engine.

13. What is an expansion valve? Sketch such a valve, and show where it is placed with reference to the ordinary slide valve, and explain the manner in which it acts.

14. A marine engine is provided with an ordinary three-ported valve, but has a back cut-off valve for varying the grades of expansion. Sketch the combination in section and explain its action.

15. Describe any form of valve suitable for an expansion valve, such as a gridiron valve in a condensing engine. Show the method of actuating such a valve, making any necessary sketches.

16. Sketch in section a double-ported slide valve with an expansion valve working at the back of it.

17. Sketch and describe, by an index of parts, Thom's double-ported "trick" slide valve.

18. Sketch and describe a piston valve. What are the reasons for adopting this form of valve in preference to ordinary slide valves? Explain its advantages and disadvantages.

19. Describe, with a sketch, the mode of reversing a marine engine when fitted with a single eccentric, and show that the mechanism becomes self-acting after the reversal.

20. Sketch Stephenson's double eccentric and link motion, name the several parts, and explain its action upon a slide valve.

21. Sketch and explain the mechanism for opening and closing the steam valve of a single-acting Cornish pumping engine.

22. Describe the modified form of D slide known as a double-ported slide valve. Sketch a section through the valve and ports, showing the position of the valve when just opening for steam. When is it desirable to adopt a valve of this construction?

23. Sketch and explain the construction of the Stephenson link motion or of any form of radial valve gear, and show how it affects the reversal of an engine. How do we find the probable changes in advance and half-travel due to altering the position of the gear, and show how these affect the points of admission, cut-off, release, and compression?

24. Sketch and describe a piston slide-valve, or a flat-faced slide-valve with relief frame, showing the ports and valve chest, or the corresponding part of any large engine whose valve arrangements you know about.

25. Describe and make a skeleton drawing of any one form of link motion or radial valve gear. Show how we find the half-travel and advance for any position of the gear, and give reasons for or proof of the correctness of your method. Show the correction to be applied because the motion is not simple harmonic.

26. Describe, with sketches, any form of link motion or radial valve gear. What does it effect, and how does it work?

27. Describe, with sketches, a piston slide-valve, showing its seat and the cylinder ports.

28. Show how the link motions are all shifted at the same time in a three-cylinder engine. Describe, with sketches, one of these link motions. What is the effect of shifting the gear?

29. Stephenson link motion, crossed eccentric rods; show clearly the reason for our rule for finding half-travel and advance for any position of the gear. State the rule. Does the lead increase or does it diminish with more expansion?

30. Describe, with sketches, (*a*) a double-ported balanced slide valve. State carefully what advantages are gained by its use, and in what class of engines it is used; *or* (*b*) the cylinder and valve arrangements of an engine fitted with the Corliss type of valves. Explain fully how the cut-off is controlled in such engines.

31. Sketch and describe either—(*a*) a piston steam valve, or (*b*) a crossed arm loaded governor.

32. Find the proper diameter and stroke of a double-acting engine of 10 horse-power, to run at 120 revolutions per minute, with a mean effective pressure of 50 lbs. per square inch—the stroke being $1\frac{1}{2}$ times the diameter of the piston.

33. Sketch in one section the high-pressure piston of a large marine engine, showing it at the end of its stroke; show the jacketed cylinder cover, steam port and joints, also the relief valve; show also the end of the liner and the body or shell of the cylinder, and the method of fastening the piston to the rod.

34. Describe, with full sketches, an expansion valve arrangement of the Meyer valve type, showing clearly how the point of cut-off can be varied.

35. Sketch the stuffing-box of a steam engine cylinder to withstand, say, a pressure of 108 lbs. per square inch, and state of what materials the different parts are made.

LECTURE XXV.

PISTONS, CONDENSERS, PUMPS, &c.

CONTENTS.—Details of Engines (*Continued*)*—Pistons and Piston-Rods—Crossheads—Connecting-Rods—Crank Shafts—Main-Shaft Bearings—Thrust Bearings—Condensers, Jet and Surface—General Remarks on Condensers—Air Pumps—Air-Pump Valves—Circulating Pumps—Gwynne's Centrifugal Pumps—Complete Condensing Plants for Electric Power Installations—Table showing the Temperature and Pressure of Aqueous Vapour in Condensers, as indicated by each Half-Inch on the Vacuum Gauge—Ejector Condensers—Splitting, Corrosion, and Pitting of Condenser Tubes—Composition of Condenser Tubes and Doors, with their usual Faults—Questions.

Pistons and Piston-Rods.—A good piston, besides having sufficient strength to withstand the pressure to which it is subjected, should be absolutely steam tight, and should exert a uniform pressure all round its circumference; but this pressure should not be so great as to create excessive friction between it and the cylinder. The simplest form of piston is that used in locomotives and small engines (see folding-page of locomotive. Lecture XXXII.) It consists of a simple disc of metal with a flange round one side, and a small boss in the centre to receive the piston-rod. The piston is kept steam tight by two or three metal packing rings, which are known as Ramsbottom's rings. These rings are turned rather larger in diameter than the bore of the cylinder, and are afterwards cut across, so that they may be compressed into it. They are fitted into recesses turned in the piston, and the cut joints of the rings are set at opposite sides of it. This form of piston is one of the very best yet devised, both for small cylinders and large, where high pressure steam is used.

Engine pistons above 20 inches diameter are usually constructed hollow, and the two sides are connected by ribs, although some very large pistons for fast-running engines have been made of cast-steel with only one thickness of metal and cone-shaped to give them sufficient strength, as shown in the first following diagram. The piston-rods are made of mild steel, turned and fitted as shown.

The old method of packing large pistons is shown on the opposite page.† One side of the piston is formed with a flange, and the other with a recess to receive the "*junk ring.*" Between

* Students should compare the details in this lecture with the specification given in Lecture XXIII. and Lecture XXI. of our Elementary Manual.

† From Seaton's *Manual of Marine Engineering*, 18th Ed., where the student will find several other modern forms of pistons illustrated and described.

Note.—In Mr. Kirk's pistons there is a "floating ring" for the springs to press against, which greatly helps to equalise the pressure round the circumference of the expansion ring.

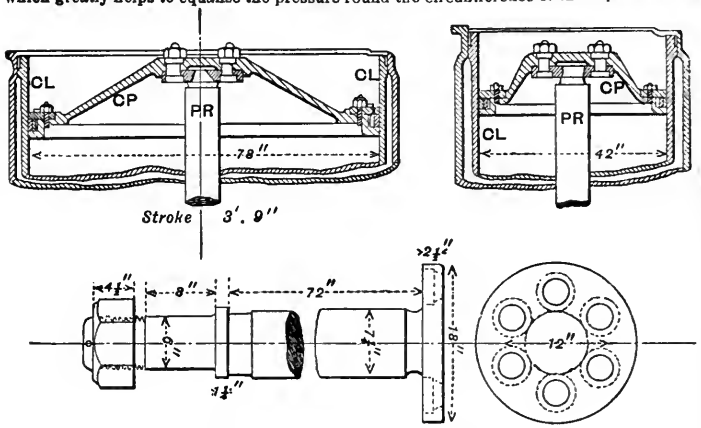

KIRK'S STEEL-CONED PISTONS.

C P for Coned pistons. P R for Piston-rods. C L for Cylinder liners.

this flange and junk ring, J R, a packing or expansion ring, E R, of cast-iron is fitted. This ring is pressed out against the sides of the cylinder by small springs as shown in the plan. The junk

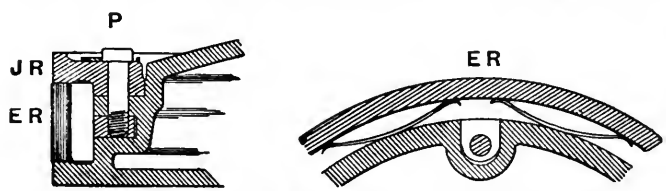

OLD FORM OF LARGE CYLINDER PISTON.

ring is fixed down by screwed pins, P, which screw into brass nuts; these brass nuts being recessed into the body of the piston at suitable intervals round its circumference. The defect of this form of piston lies in the springs, which can scarcely be adjusted to give uniform pressure at all parts of the ring; and since they press against the body of the piston, the packing ring is not free to move laterally, and follow out the bore of a cylinder when it has worn a little out of line with the piston-rod.

There is an immense variety of patent pistons, each having some particular feature or features claimed for it by the inventor

or manufacturer. The student has only to turn to the heading under "pistons" in the author's *Elementary Manual on Heat and Heat Engines*, and he will find quite a variety of forms. It is impossible in a book of the present dimensions to do more than select one type.

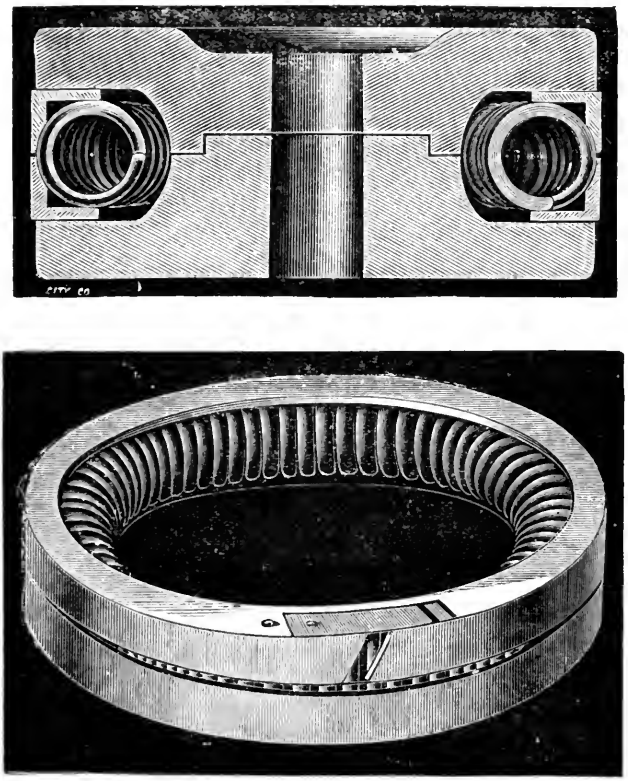

THE LANCASTER SPIRAL-SPRING PISTON.

From the accompanying illustration it will be seen, that the Lancaster piston consists of a straight spiral spring, bent into a circle, which forces the two piston rings out against the walls of the cylinder, and at the same time presses them firmly between the junk rings or halves, into which the piston is divided. The

pressure between the piston rings and the cylinder, results from the natural elasticity of the spiral spring trying to regain its natural shape, and does not depend upon screwing down of a junk ring, or bolting together the halves of the piston. There is, therefore, no danger of excessive friction being set up between the rings and the sides of the cylinder, or any opportunity for careless adjustment on the part of the engine-fitter, if the whole has been properly proportioned for the cylinder.

The packing rings in almost all pistons are simply cast-iron rings, which have been turned to a slightly larger diameter than that of the bore of the cylinder, and afterwards cut across to permit of compression, and of inserting them into the cylinder along with the piston. The slits in the rings are connected by a thin plate as shown, and they are placed diametrically opposite each other, in order to prevent the steam passing from one side of the piston to the other.

Buckley's piston is similar in general design to the one we have just described; but instead of the packing rings being a couple of right angles in section, they are obtuse angles on the inside thus— and the spiral spring is oval in form, or like the letter O. In Rowan's piston there are two oval springs instead of one, each spring acting on a packing ring independent of the other.

Mather & Platt's, and Oldham's pistons, have each the packing rings arranged like the "Lancaster," but the rings are pressed outwards against the sides of the cylinder, and upward and downward against the junk ring and the piston, by a spiral hoop having three or four turns, in its endeavour to unwind itself.

Crossheads.—The part which connects the end of the piston-rod to the connecting-rod, is termed the *crosshead.* In direct-acting engines, the crosshead requires to be supported by guides, in order to bear the side pressure thrown on it by the oblique action of the connecting-rod. If the crosshead were not supported, and the piston-rod not guided in any manner, then this side pressure (or pressure at right angles to the direction of motion of the piston) would cause injurious bending of the piston-rod, and very excessive wear of the glands and stuffing-boxes. In the case of a beam engine, the intervention of the parallel motion obviates the necessity for guides, since the piston-rod end moves in a straight line, and the side pressure is supported by the parallel motion bars.

There is a large variety of forms of crossheads in general use at the present time. In some engines, the crosshead is separate from the piston-rod, and is attached to it by means of a cotter which passes through both; in others, it is forged to the end of the piston-rod. The guide or slide blocks (which slide against a planed surface on the engine framing which supports the side pressure) are sometimes formed in the same piece as the cross head, but more usually are separate and are fixed to it in a simple manner. In many horizontal land engines the slide blocks are attached to the ends of a horizontal bar fixed at right angles to the piston-rod, and with a square piece in the centre which forms the crosshead of the engine, and the blocks move over planed surfaces on each side of the engine framing. This plan is not, however, so good as that of supporting the crosshead immediately underneath it, and with the slide bed immediately below (or above, as the case may be) the line of the piston-rod (refer back to the figures in Lecture XIX.) If the wear at the joint of the crosshead and connecting-rod is intended to take place in the connecting-rod, the pin which passes through both is *fixed* in the cross-head or forms part of it; and the connecting-rod rotates through a certain angle about the pin, and is fitted with bushes in order to provide for the wear. If, however, as is more generally the case, the wear is imposed upon the crosshead, the pin is then fixed in the connecting-rod end, and the crosshead is provided with bushes where the pin passes through it. The pin therefore oscillates with the connecting-rod.

In a form of crosshead very generally employed in marine practice, it is forged to the end of the piston-rod, and has a square hole cut out of it, to receive the bush which is formed in halves. The connecting-rod end is forked, and passes over the ends of the bush. The pin is prevented from turning in the connecting-rod, and all the wear takes place in the crosshead bush. The halves of this bush are held together by a wrought-iron cover with bolts passing through it. These bolts must be of sufficient section at the bottom of the thread to withstand a tension equal to the initial effective pressure of the steam multiplied by the area of the cylinder. The crosshead is carried out at the sides to receive two flat cast-iron slide plates or slippers, which bear against the planed columns, and resist the side pressure of the connecting-rod. These plates fit round the crosshead with three flanges only, so that they may be pushed into position, or taken out without disconnecting any of the larger parts; and they are prevented from slipping out

at the one side by small screwed pins which are fitted in all round.

For engines which require to rotate in one direction only, a slide block on one side of the piston-rod (that side against which the connecting-rod thrusts) is all that is necessary, and frequently marine engines which are but seldom required to be driven backwards, are thus fitted (see folding page, Lecture XXI.), but there, as in every case, two guide faces are required.

Connecting-Rods.—If an engine connecting-rod were of infinite length (*i.e.*, so long as to remain always parallel to the piston rod), there would be no side pressure on the guides of the engine, and the motion of the piston and crank would be a simple harmonic motion. But in practice, a certain definite length must be assigned to the connecting rod, therefore a certain amount of pressure is always thrown on the engine slides, and a certain amount of irregularity must take place in the motion. The shorter the connecting-rod the greater is the pressure on the guides, and the greater the irregularity in the motion. In practice, the length of the connecting-rod varies from two to three times the length of the stroke of the engine. Connecting-rods as short as the former proportion are found in marine practice, whilst those of the latter length are common in land engines. In some inverted-cylinder marine engines, especially those of the Royal Navy, which must be kept low down in the vessel, there is not sufficient head room for connecting-rods equal to two strokes in length, and, as a matter of necessity, shorter rods require to be put in; but they do not work satisfactorily, and create excessive pressure between the slides and blocks.

Connecting-rods require to stand alternately a tensile and a compressive stress, and to resist the latter without bending. They are usually made larger in diameter at the middle than at the ends, or gradually tapered from crosshead to the crank-shaft end. The ends of connecting-rods are formed in a variety of ways, but, as a rule, the crosshead end is forked, and has simply two solid eyes which receive the pin on each side of the crosshead. For land engines, the crank-pin end is often constructed as follows (see Lecture XIX.):—The end of the rod proper is made rectangular, and the bushes which fit the crank-pin are made in halves; one-half being semi-circular on the back, and the other half square. The rectangular end of the connecting-rod butts against the back of the inner square-half of the bush, and fits between its end flanges, whilst the other half of the bush is held by a wrought-iron strap which

passes round it, and is secured to the end of the connecting-rod by gibs and cotter. This is known as the "strap" end, and is found to work very satisfactorily, since the gib and cotter arrangement admits of adjustment when the bushes have worn slack. It is, however, a little more expensive to manufacture than some of the other equally good forms. In another form the crank-pin end is of a T shape, and has a semi-circular hole cut in it to receive one-half of the crank-pin bush. The cover which is formed to receive the other half bush, is fixed to the T end by means of bolts. The crosshead end of the rod is forked, and fits exactly over the bushes of the crosshead. The crosshead pin is fixed into the forked end of the connecting-rod, and turns in the bushes of the crosshead.

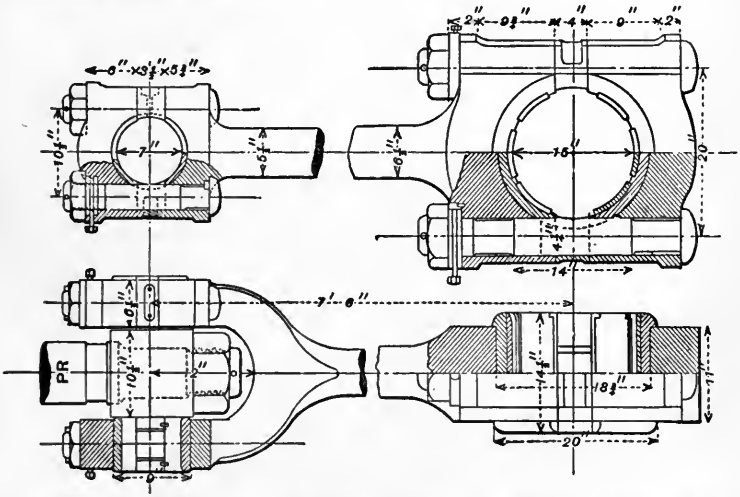

STEEL CONNECTING-ROD AS FITTED BY MESSRS. ROBERT NAPIER & SONS TO ENGINES 2,500 I.H.P.

As an example of large steel connecting-rods, we here illustrate those designed by Mr. Kirk for the same engines as his steel pistons and piston-rods described at the commencement of this lecture. The drawing is self-explanatory.

Crank Shafts.—Crank shafts for land engines have frequently

only a single crank, which is fixed to the end of the shaft, and overhung on one side of the main bearing. In marine practice, however, a double crank is almost invariably used. For engines having crank shafts up to 12 or 15 inches diameter, these cranks are always forged with the shaft, but when the crank shaft is of larger dimensions, the cranks are usually built in separate pieces.

In order to estimate the correct diameter of crank-shaft for a given engine it is necessary to construct the diagram of twisting moments by the method shown in Lecture XVIII. The maximum twisting moment on the shaft is then obtained, and when equated to the resistance of the shaft to torsion gives the diameter required.* A certain amount of bending is also produced by the pressure on the crank-pin and must also be taken into account by reducing it along with the twisting moment to *one equivalent twisting moment*.† The bending action is greatest when the crank is at the dead points.

Main Shaft Bearings.—The main shaft bearings of most forms of engine present no special feature, unless it be that they are, as a rule, more substantial in construction than ordinary bearings. They are subjected to severe jerks and shocks, due to the irregularities in the motion of the piston, and for this reason should be specially well fitted to, or cast along with, the sole-plate or engine framing. The brasses are sometimes made adjustable so that the wear may be taken up periodically, but when the attainment of adjustment is obtained at the expense of the rigidity of the bearing (as is sometimes the case) it is more a disadvantage than otherwise. Large engines have rarely any special means of adjustment, but the bushes are usually lined with white metal, and when this becomes worn it may be easily renewed. The lubrication of crank-shaft bearings is a matter of great importance and should receive careful attention.

Thrust Bearings.—In marine screw engines it is necessary to provide some means of taking up the longitudinal thrust of the screw propeller. In small engines this is often done by a simple collar on the shaft which bears against the flange of the aft main bush in the sole-plate, but when the thrust is great, this plan is not sufficient and a "thrust block" is fitted. The form of thrust block which, until recently, was chiefly in use is shown in the next diagram.‡ An enlarged portion of the screw shaft has a number of rings cut in it, and these rings fit into corresponding

* The safe stress which can be put on a crank-shaft is pretty much a matter of experience, and hence there are various constants adopted by different makers.

† See the author's *Strength of Materials* for calculations for shafts.

‡ This cut and the next are from Seaton's *Marine Engineering*, to which the student should refer for rules and dimensions of crank-shafts and thrust bearings, &c.

recesses in a large brass bush. These recesses are formed either by having rectangular grooves bored out of the brass or by the insertion of brass rings into checks bored out to receive them, as shown in the above figure. This arrangement has been found to work very well when kept within limits as to size, and when

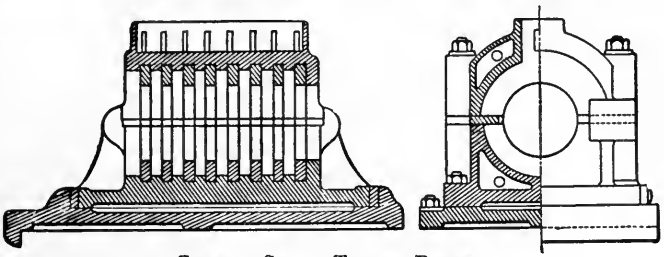

COMMON SMALL THRUST BLOCK.

effectually prevented from heating. When it heats it gives great trouble, and adjustment cannot well be effected at sea.

A much better form of thrust block is shown in the next fig. In this block, the thrust is supported by independent horse-shoe shaped pieces of cast iron, which are faced with white metal. These thrust pieces fit between rings turned on the screw shaft. They are secured on each side of the shaft to the thrust block, but are capable of independent adjustment by means of the nuts and set screws on each side, or, of adjustment as a whole, by the nuts at each end of the rods which support them at the sides. This block has some advantages over the old form, the principal of which are—(1) The thrust pieces are separate and independent of each other, and they may be adjusted, or taken out separately for examination, without stopping the engines. (2) The lubrication is more easily effected, since the hollow casing of the thrust block may be filled with oil and soapy water. The rings on the shaft revolve in this mixture and thus every part of the bearing is kept continuously lubricated with little attention and trouble.

A thrust bearing of course affords no lateral or vertical support to the shaft, its office is simply that of taking the end thrust, and consequently the shaft should always be supported close to the thrust bearing by an ordinary pillow block.

Condensers.—Condensers are of two kinds, *jet* condensers and *surface* condensers. In the jet condenser the steam is condensed by being brought into actual contact with cold water, while in

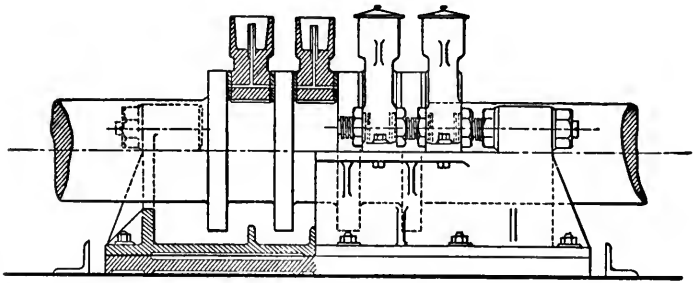

HALF-SECTION AND SIDE VIEW.—LARGE IMPROVED THRUST BLOCK.

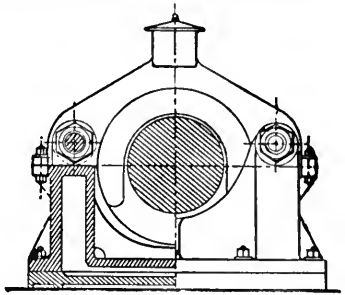

HALF CROSS-SECTION AND END VIEW

the surface condenser the steam condenses upon thin metallic surfaces, which are kept cold by cold water circulating on the other side.

*Jet Condensers.**—Jet condensers may be of almost any form which is suitable for the engines to which they are to be fitted. They consist essentially of a cast-iron chamber, into which the exhaust steam from the cylinder of the engine passes, and comes in contact with a jet or spray of cold water also issuing into it. The bottom of this chamber is connected to a pump known as the air-pump, the function of which is to draw off the water and any air or vapour which may be in the chamber. The condensing chamber or condenser must be of sufficient capacity to prevent flooding, *i.e.*, becoming filled with water, but should not be larger than is necessary, since then the air-pump takes longer to form a vacuum after the engines start. The bottom of the condenser should be inclined towards the side to which the air-pump is connected, so that all the water may run into the suction end of the

* See figures of Watt's Engines, Lecture II., also Lecture XXI. for positions and forms of jet condensers.

pump. The inlet for the steam should be high up in the condenser, and is usually a plain pipe. The water injection inlet should be formed with a perforated pipe or rose carried well into the middle of the condenser, or opposite the end of the steam pipe, so that the water may be fairly distributed, and the condensation of the steam be almost instantaneous. If the condenser is very large, or of a long shape, two rose injection pipes may be fitted with advantage. The calculations as to the amount of water required for condensation have been fully gone into in Lectures IX. and X.

Surface Condenser. —The surface condenser as usually made, consists of a cast-iron chamber, having a large number of thin brass tubes passing from one side or end to the other. These tubes are kept cold by forcing cold water through them by means of the pump known as the circulating pump. The exhaust steam, which is admitted into the condensing chamber, comes into contact with the exterior surface of the tubes, and is condensed by the cooling effect of the water they contain. In some few cases this order of things has been reversed, and the steam passed through the tubes while the cold water is circulated outside. "Baffle" plates are usually fitted immediately opposite the steam entrance, in order to distribute the steam evenly over the tubes. The condenser tubes are usually divided into groups or tiers. The cold water is forced through one tier of tubes, and then returned back across or along the condenser by another tier. The number of tiers is usually from two to four. The best method of working is to cause the hottest water to meet the hottest steam. Thus, if the steam enters at the top of the condenser, and the tubes are horizontal (as in most marine engines), the cold water should be forced in at the bottom, and passed first through the lowest group of tubes, returning along the group next above the lowest. The water is thereby considerably raised in temperature, and just previous to its being discharged from the condenser it passes through the highest group of tubes, which group is first acted upon by the steam. The condenser tubes are usually about $\frac{3}{4}$ inch outside diameter, and are of brass. They are fitted into brass tube plates, and packed to prevent leakage. The methods of packing them are very various, but one of the best which is in general use is worthy of notice, and is shown in the figure. The brass tube

plate is from 1 to 1¼ inch thick, and has holes bored in it to receive the tubes. These holes are bored ¼ inch or thereby larger in diameter than the tubes, for about ¾ inch into the thickness of the plate, and are screwed so as to receive small brass stuffing glands. The diameter of the holes for the remainder of their length being only slightly larger than that of the tubes to allow freedom for packing. Hemp or other suitable packing is wound round the tubes in the annular spaces between the tubes and the plate, and this packing is held firmly in position by the screwed glands. The glands are simply brass ferrules (screwed in long lengths from ordinary brass tubing, cut off with a circular saw, and notched), which fit loosely on the tubes, and are screwed externally to fit the screwed hole in the tube plate. They have a slit on one end, so that they may be screwed home by means of a brace fitted with a screw-driver bit. It will be observed from the figure, that there is a small internal shoulder. This should always be adopted whether the condenser tubes are to be vertical or horizontal for the purpose of preventing any end movement. Even with horizontal tubes a little creeping might take place due to expansion and contraction.

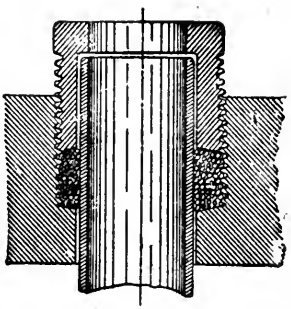

CONDENSER TUBE PACKING.

General Remarks on Condensers.—Jet condensers are largely used for land engines, and as far as mere efficiency goes they are quite as good as surface condensers. The great objection to the jet condenser is, that the water formed by condensing the steam mixes with the water used for condensation; and, since the feed water for the boiler is drawn from the hot well, if the water used for condensation be dirty, or otherwise impure, the boiler becomes clagged with mud, and the plates encrusted with other impurities. This necessitates a constant cleaning out of the boiler, for by corrosion, and the greater tendency to overheating, greatly shortens its life. In land practice, where good water may be obtained for condensation, jet condensers are still used, but if the water available for this purpose be impure, surface condensers should be adopted. Although they are more expensive than jet condensers, they will soon repay the difference of first cost in saving the boiler from deterioration. In modern marine practice, surface condensers are invariably used—in fact, their introduction marked a new era in marine engine making, since they render high-pressure steam available

for practical use. High-pressure steam cannot be adopted in conjunction with the jet condenser, for the following reasons:—In old marine engines with jet condensers, the highest steam pressure that could be conveniently carried was from 30 to 35 lbs., not from the mere mechanical difficulty of making the boilers strong enough to carry a higher pressure, but from the fact that they got quickly "salted-up" whenever the pressure exceeded that figure. The boilers were practically fed with salt water, for the water employed to condense the steam was drawn direct from the sea, and after mixing with the condensed steam, the major portion of it was thrown back into the sea by the air-pump, while a comparatively small quantity of it was pumped into the boiler by the feed-pump. The consequence of thus feeding boilers with salt water was, that deposits of sulphate and carbonate of lime, &c., took place, but by frequently blowing out the scum and the loose sediment by surface and bottom blow-off cocks, a careful engineer could keep his boilers fairly clean and free from these incrustations.* When, however, the pressure was raised *above* 35 lbs. by gauge, or 50 lbs. absolute (corresponding to a temperature of 281° Fah., see table, Lecture VII.), the lime and other impurities (which, to a great extent, had been held in solution by the water at that and at other lower temperatures, corresponding to lower pressures), so quickly precipitated, that no economical amount of "blowing off" could cope with it, and boilers not only became unmanageable, but actually dangerous. Blowing off the hot water was in any case, *however* sparingly and carefully done, a costly procedure, and when it had to be resorted to frequently, it meant a very great waste of coal. The danger arose from the tops of the furnace flues getting red-hot and coming down into the fires, due to the thick crust of lime on the water side preventing the water coming into near contact with them; besides which, this crust or scale when it became highly heated, sometimes cracked, and permitted the water to come into direct contact with the red-hot plates, thus suddenly generating a large quantity of steam of a pressure beyond what the area of the safety valves could freely and quickly let away. With the surface condenser, the condensed steam, and consequently the feed water, are kept entirely separate

* The quantity of chemical salts held in solution by the water, or, in other words, the density of the water is ascertained by simply running off a little of it (by a special cock fitted to the front of the boiler) into a deep can, and inserting in it a hydrometer or salinometer graduated in 32nds. For example, suppose the hydrometer sinks in the water to the mark 3, then the water is said to have $\frac{3}{32}$ of saltness. It would certainly be better if instruments were so marked as to be read off in percentages of the density of pure or of salt water. This is dealt with in Vol. II.

from the circulating water, and only a very little salt water (or better fresh water from a separate condenser or fresh-water tank) has to be added by an auxiliary feed pipe, in order to make up for any leakage that may take place. A careful engineer has, therefore, little or no necessity for blowing off, and he can run his boilers for two months at a time without changing the water in them, or allowing more deposit to accumulate than a thin skin about the thickness of a sixpence, which is considered beneficial if evenly deposited, as it prevents pitting of the boiler plates.

Air-Pumps.—As we have remarked before, the duty of the air-pump in the case of a jet condenser is to discharge the whole of the condensing and condensed water as well as the air into the hot-well, and in the case of a surface condenser to free the same of the condensed water as well as the air and the vapour which has been set free. Water contains a large proportion of air mixed with it, unless it has been expelled by one or other of the special methods now adopted in connection with high-pressure engines, such as Weir's patent feed-water heater and air extractor. This air expands in the condenser, and would considerably diminish the vacuum if it was not taken out at every stroke of the air-pump. Besides this air, there would, of course, be an accumulation of vapour or low-pressure steam in the condenser, from the condensed water under the action of a partial vacuum or low pressure, and this vapour would soon fill the condenser and also spoil the vacuum if it were not extracted by the air-pump. Consequently, we see that the chief work that the air-pump has to perform is to free the surface condenser of air and vapour, for a very small pump would suffice to extract the condensed steam. Care must, therefore, be taken not only to have a thoroughly efficient, but also a sufficiently large air-pump, in order to maintain a good vacuum—say equivalent to from 26 to 27 inches on the barometric column.

The horizontal air-pumps are from necessity almost always double-acting, and vertical ones generally single-acting. The chief difference between the two kinds lies in this, that in the case of the double-acting air-pump the bucket is closed or solid, and there is a complete set of suction and delivery valves at each end of the pump; whereas, in the single-acting one, the bucket is fitted with valves of the same size and often of the same shape as the foot valves at the base and the delivery valves at the top of the pump. The efficiency or volume of water and air which

can be extracted for a certain expenditure of power is much greater, as a rule, in the single-acting vertical air-pump, than in the double-acting horizontal one, from the fact that the flow of water, etc., being always in one direction, its momentum is not checked, the valves from their natural position fall down on their seats, and as there is always some water on them, they are more easily kept tight, and less clearance can be allowed between the bucket and the foot and delivery valves.

Air and Circulating Pump Valves.—The importance as well as the difficulty of getting thoroughly reliable and lasting valves for air and circulating pumps, is shown by the large variety of devices that have been proposed and tried.

The form shown was devised by Mr. Beldam, a practical marine engineer, and he claims the following advantages for it over the common india-rubber valve—viz., that it holds the vacuum better, lasts longer, is not affected by oils or temperatures, and does not deteriorate by being kept in stock; further, that it is not liable to crack like some other metallic valves.

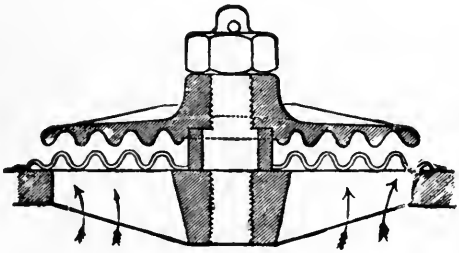

BELDAM'S CORRUGATED METALLIC VALVE.

Its construction will be easily understood from the figure and the following description :—The upper part or "check" for the valve is screwed on and fixed to the central stud by a nut and split pin. Its under surface is corrugated as shown. The lower part or the valve seat is made open ribbed to permit the water to pass through it easily, and it is fixed into the orifice where the valve is intended to act, either in the foot valve chamber, or the air-pump bucket, or the delivery valve chamber. The central thin corrugated sheet or valve proper, is fixed at its centre to a

loose ferrule which fits the parallel portion of the central stud. This admits of the valve and central ferrule freely rising and falling down to its seat as a whole. The chief object of using the corrugated plate being that, for a very thin and comparatively light plate, you get a much stiffer and stronger valve than you would from a plain plate.

Circulating Pumps.—Circulating pumps are employed only in connection with surface condensers. They are of three kinds—single, or double-acting reciprocating, or rotary pumps. The single- or the double-acting reciprocating pumps are almost precisely similar in form and construction to the single- or double-acting air-pumps just described (see Lecture XXIII., folding page for a section of a double-acting circulating pump). The single-acting pump should, however, be provided with a good-sized air vessel, about double the capacity of the pump, in order to cause a steady flow of water through the condenser tubes, and both it and the double-acting one should have a small inlet air-valve or pet valve, so placed as to automatically admit a sufficient quantity of air to act as a cushion, and thus prevent the natural vibration and noise due to the momentum of the water, as well as a pipe and cock, or bye pass connecting the suction and delivery chambers, to regulate the supply of water without putting any over-stress on the pump.

Centrifugal Pump.—In large steamers where there is plenty of room, it is now usual to employ either a double set of rotary or centrifugal pumps, or one centrifugal pump in addition to the ordinary circulating pump worked by the main engines. One of these pumps, as manufactured by Messrs. J. & H. Gwynne, is illustrated in the following figures. The pump itself consists

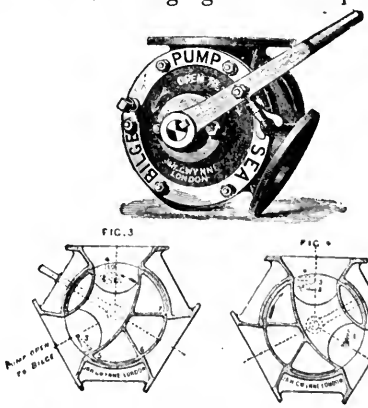

Sea and Bilge Cock for Circulating Pump.

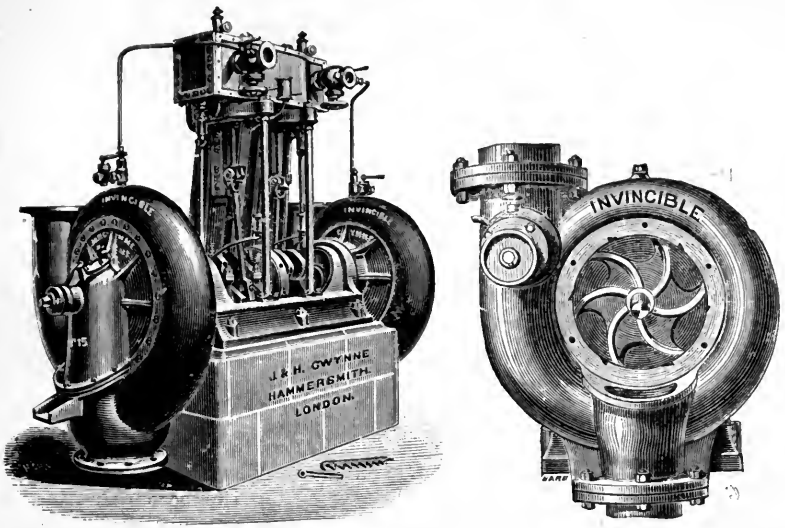

GWYNNE'S CENTRIFUGAL-CIRCULATING PUMP.

of a wheel with vanes (curved backwards from the direction of rotation) moving inside a closed snail-like chamber. The water enters at the centre of the vanes from a suction pipe communicating with the sea or the bilges, through the special form of cock shown. The suction pipe is attached to the lower central flange of the Gwynne pump, and the water having a rapid circular motion imparted to it by the rotating vanes, it escapes with considerable tangential force by the upper flange at the back side; thence it passes through the tiers of condenser tubes back to the sea by the discharge pipe, in a continuous stream. The pump or pumps are secured to the bed plate of a pair of small vertical fast-speed Gwynne engines, so that the spindle or spindles may be coupled direct to the engine crank shaft. The general arrangement will be easily understood and followed from the figures.

This form of pump has several important advantages over the single or double-acting reciprocating pumps.

1. There are no valves in it to throttle the flow of the water or to get out of order.

2. The stream of water being continuous and uniform in volume, all intermittent shocks and arrangements for preventing these are avoided.

3. A supply of cooling water may be sent through the condenser while "blowing through" and before starting the main engines, thus preventing over-heating the condenser, and ensuring a good vacuum at the very first start.

4. The amount of circulating water may be varied at pleasure, according to circumstances, by simply running the circulating pump fast or slow.

5. Its efficiency is greater than that of reciprocating pumps for the purpose in view.

6. If there are two sets, the one can be taken to pieces and cleaned or repaired while the other is at work, without stopping the engines, which cannot be done with reciprocating pumps, as usually fitted to and worked by the main engines.

The first cost may be greater, and the attention required to be given to them quite as much as in the case of the reciprocating pump, but owing to the combination of advantages stated above, they are being now almost universally adopted in large steamers and even small ones often carry them.

Surface Condensing Plant for the Manx Electric Railway. — *General Description.*—As will be seen from the accompanying elevation and plan, this complete condensing plant consists of condenser, electrically-driven circulating pumps and twin steam-driven air pumps, together with the necessary exhaust steam and water pipes.

It receives and deals with 18,000 lbs. of exhaust steam per hour from two Belliss & Morcom engines, together with the auxiliary plant.

The detailed descriptions of this condenser, the air and the circulating pumps, are given separately; but we may here state, that the circulating pump is coupled direct to a British Westinghouse electric motor of the semi-enclosed series wound type, for a 520-volt circuit.

The electric switch-gear is mounted on the wall near the motor. It consists of a starting switch fitted with a safety release for no load and over-load, and with a single-pole main switch an fuse, entirely enclosed in an iron case.

The circulating water piping is so arranged, that the end of its discharge orifice is always submerged. A syphonic action is thus obtained between the supply and delivery through the centrifugal pump; which, when once started, minimises the power required to drive the water throughout its circuit.

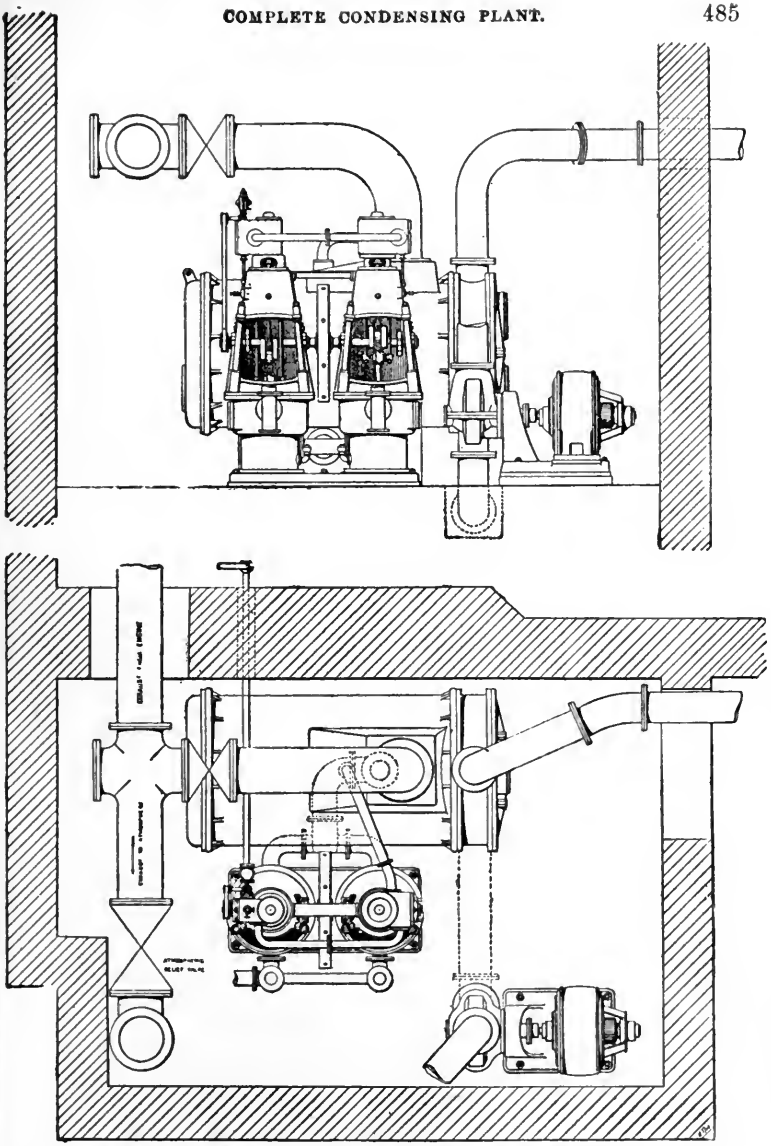

COMPLETE CONDENSING PLANT FOR THE MANX ELECTRIC RAILWAY.
Designed and made by Mirrlees, Watson & Co., Glasgow.

Detailed Description of Surface Condenser for the Manx Electric Railway.— *Casing and Pipe Connections.*—As shown by the accompanying longitudinal and cross-sections, as well as by the two previous outside views, this condenser is of the horizontal cylindrical type. The cylindrical condenser C C, and water-head with its diaphragm or division-plate D P_2, as well as the two end covers E C, and condenser supports C S, are all made of cast iron. A suitable large opening for connecting to the exhaust pipe E P, of the engines, is shown at the top of the casing, whilst another opening is provided at the bottom of this casing for connecting to the air-pump suction A S. The circulating water inlet C I, is shown at the bottom of the water-head, whilst the cooling water outlet C O, is at the top of this same end chamber.

Inspection and Cleaning Doors.—Both end covers and the cylindrical shell are fitted with inspection doors I D. By means of the former the condition of the tube ends may be seen and any of the tubes adjusted, whilst the inspection doors I D, on the top and bottom of the shell, serve the purpose of enabling the interior to be thoroughly cleaned, washed out, or flooded for testing the tightness of the tubes. The end covers E C, may be removed without disturbing any of the pipe connections or tube plates.

Tube Plates and Tubes.—The tube plates T P, are made of rolled brass, 1 inch in thickness. They are drilled, tapped, and screwed for brass ferrules and are suitably stayed. The ferrules are provided with an interior lip to prevent creeping of the tubes, whilst, at the same time, freely permitting of the requisite expansion and contraction of the tubes, exactly in the same way as previously described and illustrated in this lecture, for the marine engine surface condensers.

The brass tubes B T, are made of solid-drawn brass, $\frac{3}{4}$ inch in external diameter and of 18 S.W.G. or ·048 inch in thickness. They are tinned and made of a composition to withstand the corrosive action of sea water.* They are cut to the required length, passed into their respective holes in the tube plate, packed with cotton tape of the Admiralty pattern, and then fitted with the end brass ferrules.

Steam Circuit.—The exhaust steam from the engine enters the top of the condenser, by the exhaust pipe E P. A galvanised-iron baffle plate B P, is fixed opposite this opening to prevent the excessive rush of steam directly upon the top rows

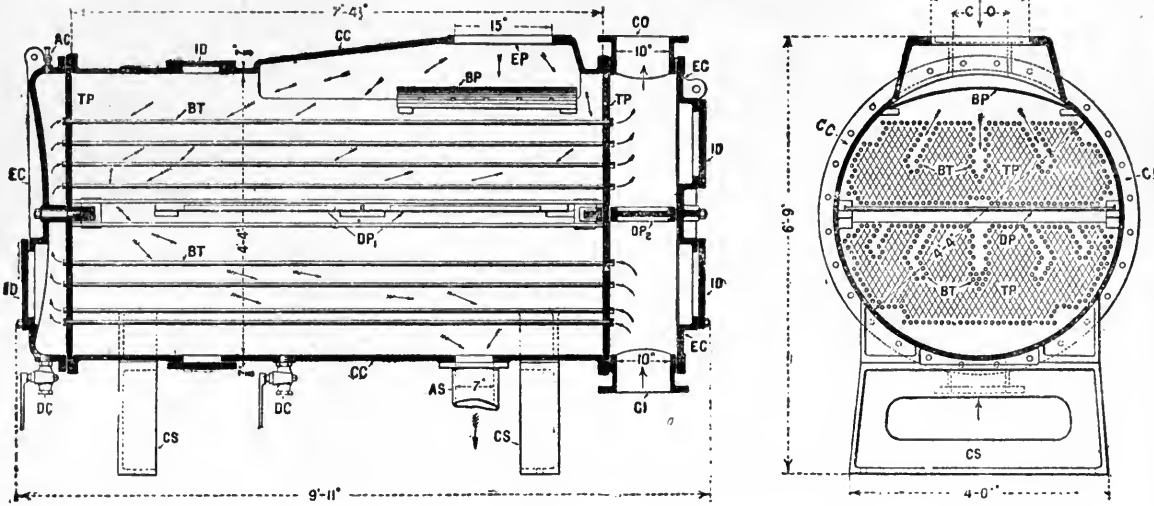

DETAIL SECTIONS OF SURFACE CONDENSER FOR MANX ELECTRIC RAILWAY.

Designed and made by Mirrlees, Watson & Co., Glasgow.

of tubes. The steam passes down, through, between, and around the upper set of tubes, travelling to the left by reason of the position of the diverging plate D P_1, and then over and between the lower set of tubes travelling to the right, as clearly indicated by the arrows (⟩→). A certain number of holes are left in this diverging plate D P_1, to allow a percentage of the steam to come in contact with the top rows of tubes in the lower set. The condensed steam is extracted along with the aqueous vapour through the bottom air-pump suction opening A S, by the twin steam-driven air pumps shown on the following side elevation, plan, and separate views.

Cooling Water Circuit.—The cooling water is forced into the circulating water inlet C I, by the electrically-driven centrifugal pump. Seeing that this water cannot pass upward owing to the cast-iron division plate D P_2, on the right-hand water chamber, it must find its way through the lower tier of brass tubes B T, into the space facing the end cover E C. It then flows up and through the higher tier of brass tubes, to the circulating water outlet C O, from whence it passes to the discharge tank or river, as indicated by the arrows (→) from the inlet to the outlet. It will thus be seen, that the cooling water and the steam flow in opposite directions throughout this condenser, as clearly indicated by the different arrows.

Cocks and Vacuum Gauge.—In order to free the water ends of the condenser at any time of air, there is provided an air cock A C, on the top of the left-hand end cover. It is also provided with two bottom drain cocks D C, so that it may be thoroughly freed from any lodgment of either circulating and condensed water. Further, to indicate the value of the vacuum produced inside the condenser, it is fitted with a cock, pipe, and dial-faced vacuum gauge, which have not been shown on any of the accompanying figures, since it is usual to place this gauge alongside of the steam gauges, in or near the engine-room.

Testing.—The Board of Trade have been very anxious of late, to have all condensers in connection with steam turbines tested to a reasonable high pressure, from the fact, that under certain circumstances it is just possible for steam to blow directly through steam turbines into the condenser.* All condensers made by the above-mentioned firm are tested both in the steam and water spaces to a hydraulic pressure of 30 lbs. per square inch, whether they be for use with reciprocating or with rotating engines to prove, that the material, workmanship, and tube packings are good.

* It will be seen from the figure at p. 497, that an atmospheric relief valve is placed in the exhaust steam circuit to prevent any excessive increase of steam pressure in this condenser.

Air-Pump Arrangement.—The air pumps for this installation are of the makers' standard design of the "Edwards" type of pump. As will be seen from the accompanying views, they are surmounted by substantial cast-iron frames, bolted to the top of the pump barrels and bored to form true crosshead guides. The fronts of the frames are left open, but these are stiffened by two tension bolts through hollow cast-iron columns, which permit of the removal of the pump bucket and hot-well cover without disturbing any of the other parts.

The steam cylinders are placed upon and recessed into the frames, and may be arranged for simple or for compound working as desired. The crosshead of each piston-rod is connected direct to its pump-rod crosshead by two side rods.

The piston-rod is coupled direct to a crank-shaft provided with a heavy flywheel, to allow for the expansive working of the steam in the pump cylinders, and to assist in the starting of the pumps, a bye-pass valve is fitted in the pipe connecting the top and bottom of each pump. This valve automatically closes when the vacuum produced by the pumps reaches about 10 lbs. absolute. The engine is also fitted with stop valve, Pickering governor, sight feed lubricators, and all necessary drain and relief cocks.

Edwards' Air Pump.*—The chief distinguishing feature of this pump is, that there are no foot or bucket valves, for the small valve at the right-hand bottom corner is merely a relief or snifter valve, which is generally fitted to guard against any accidentally abnormal pressure. The only working valves used are those on the upper end of the pump barrel, which are of the Kinghorn or Dermatine type, and, as these are readily accessible by removing the door at the right-hand top corner, there is a minimum waste of time in renewing them. In fact, provided there is no "head" on the discharge, renewals can be made without stopping the pump.

An important difference between an ordinary air pump, fitted with foot and bucket valves, and the Edwards pump is, that in the former, the water has to be driven up into the pump, and the resistances due to the foot valves, along with the inertia of the water, have to be overcome by pressure in the condenser. Whereas, in the Edwards pump, the water is so dealt with mechanically, that no appreciable resistances exist between the condenser and the pump.

The condensed steam flows by gravity from the condenser into the base of this pump, as shown at the left-hand lower corner

* See table at end of this lecture for the results obtained with this pump.

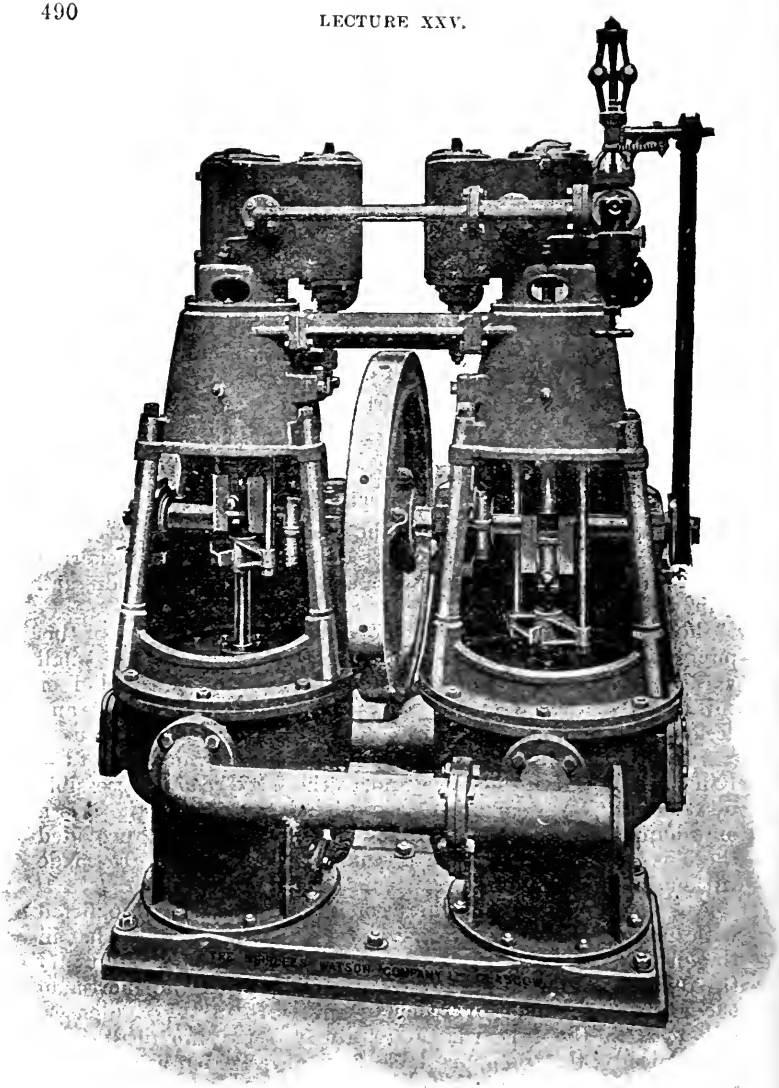

TWIN STEAM-DRIVEN EDWARDS' AIR PUMPS.

Made by Mirrlees, Watson & Co., Glasgow.

For the Manx Electric Railway Condensing Plant.

of the next figure. As the conical bottom of the bucket descends into the base of similar shape, the water is projected silently and without shock, through the ports in the barrel into its working cylinder. It will be seen from the figure, that free air inlets are maintained, and that the water, in passing through these ports into the pump barrel, tends to entrain or carry more air and vapour with it. On the up stroke, the water is discharged through the head valves, and passes from thence to the hot well.

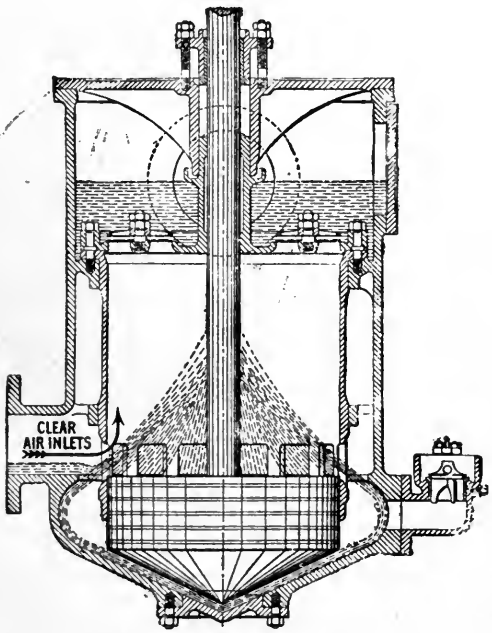

EDWARDS' AIR PUMP.

Bucket at Bottom of Stroke.

Another noticeable feature is, that the top clearance is reduced to a minimum, whereby the efficiency of this pump is increased. The most practical advantage of this pump seems to be, the small number and ready accessibility of the valves, thus affording an exceptional immunity from breakdowns.

Bon-Accord Centrifugal Pump.*—Electrically-driven centrifugal pumps are now replacing to a large extent, not only the older forms of direct-coupled main engine, but also the separate steam-driven reciprocating force pumps, for the purpose of driving the circulating cooling water through the tubes of surface condensers. This type of pump is exceptionally well suited for electric driving, from the fact, that it can be coupled direct to such a fast speed motor. Its speed can be regulated

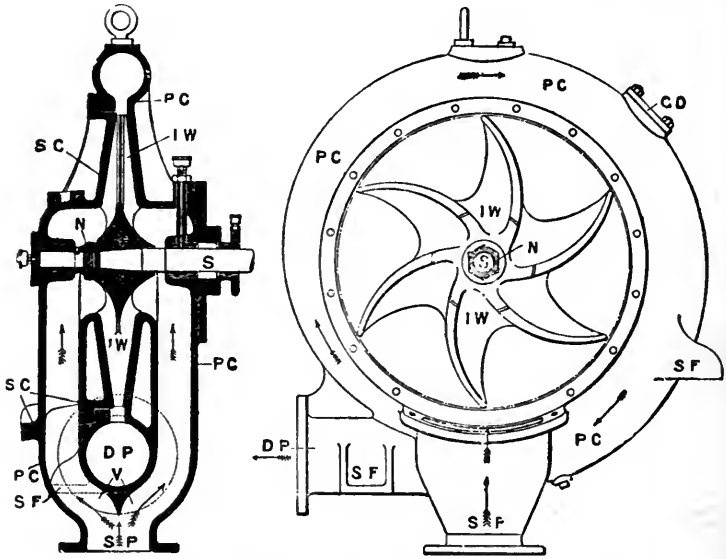

THE BON-ACCORD CENTRIFUGAL PUMP.
Designed and Made by Drysdale & Company, Glasgow.

at pleasure by a simple switch rheostat to suit varying circumstances of lifts and of rates of flow of water through such subdivided circuits, without producing the intermittent noisy shocks so noticeable with fast speed reciprocating pumps.

General Arrangement.—The position of the electric motor with its centrifugal pump, together with the suction, inlet and outlet or delivery pipes, are clearly shown upon the previous

* Students may refer to Vol. IV of the author's *Text-Book on Applied Mechanics and Mechanical Engineering* for illustrated description of another example with the various uses of centrifugal pumps, and to the end of this lecture for table of results obtained with this pump.

general arrangement, as well as upon that of the following set of condensing plant.

Details.—As will be seen from the vertical cross-section and side view, the chamber consists of a snail-like outer pump casing P C, supported upon two flanged feet S F, connected to a suction pipe S P, and a delivery pipe D P. In the centre is fitted the shaft S, which carries an impeller wheel I W, that rotates between the tapered inside faces of the pump casing P C, and a removable side cover S C.

Should this pump be situated below the level of the supply water, the air is driven out of the pump and its pipes by this head of water. In such a case, the pump can be started straight away by its motor. But, where the pump is situated above the suction supply, then the mere rotation of the impeller wheel I W is not sufficient to produce a vacuum to make the water rise into it; and consequently, the pump casing has either to be filled with water through the nipple hole (beside the lifting eye-bolt) or a steam ejector with a sluice valve are added in certain cases. Supposing that the pump is fairly started, then the mere rotation of I W inside the water-tight casing, gives sufficient kinetic energy and pressure to the water contained therein, to force the same right through the condenser tubes, and to produce the necessary vacuum in the pump, so as to ensure a continuous feed of water through the suction pipe. It will be observed, that the incoming water is divided by the sharp, knife-edged portion of cast iron, at the volute V, and that it flows equally up each side to the centre of the wheel, whereby the same is subjected to balanced side pressures.

Should the interior of the pump require to be inspected, the attendant may first open the cleaning door C D, but if he finds that any adjustment is required, then he can take off the side cover S C. When this is removed, he will obtain a clear view of the whole of I W, and he may remove the same from the tapered end of the shaft S, by unscrewing the nut N.

In the case of marine work, the pump is often driven by a simple, twin or tandem compound steam engine, but in electrical installations the kind of motor illustrated in the text is preferred. In all cases, the impeller wheel should be carefully balanced and smoothed all over so that vibration and skin friction shall be a minimum.

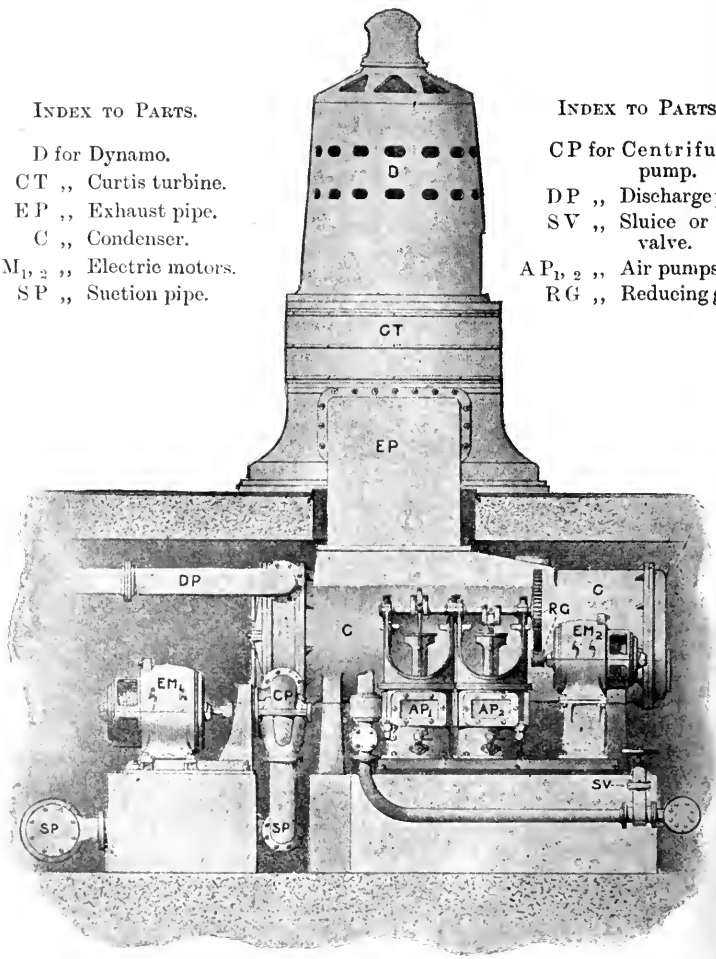

COMPLETE SURFACE CONDENSING PLANT IN CONNECTION WITH A 500 KW. CURTIS TURBINE.

Designed and Made by The Mirrlees-Watson Co.

For the British-Thomson Houston Co.'s Power House at Rugby.

Condensing Plant for a Curtis Turbine.—From what has just been said in regard to the previous plant, as well as, from an inspection of the accompanying figure with detailed index to parts, the student will at once grasp the general arrangement of this installation.

Owing to the demand for the very high vacuum of 28 or 29 inches in the case of steam turbines—as fully explained later on—the condensing plant for such prime motors must of necessity be considerably larger per horse-power, and of better quality than has hitherto been considered sufficient for ordinary reciprocating engines. As mentioned in Lecture X., a 24- to 26-inch vacuum is generally considered sufficient for ordinary reciprocating engines.

This plant is capable of dealing with 11,000 lbs. of exhaust steam per hour, as well as of exceeding that amount by 50 to 100 per cent. overload for short periods of time.

The Edwards air pumps are a combined twin set, driven at 160 revolutions per minute through single reduction gearing, by a direct current motor going at a speed of 750 revolutions per minute.

A table of some results recently obtained with the Edwards pump is appended to this lecture, from which the student will see its capabilities.

The circulating pump is also electrically driven, and being directly connected to its motor, it has the same speed of 650 revolutions per minute. In this case, the circulating pump is placed about 10 feet above the suction water level, and so discharges into a river or tank, that a syphonic action is obtained through the pump when the same is fairly started.

TABLE OF RESULTS OBTAINED WITH EDWARDS' AIR PUMPS

Type of Condenser.	Edwards' Air Pump.			Barometer Readings.	Vacuum.	Temp. of Air Pump Discharge in Degrees Fahrenheit.
	Diam.	Stroke.	Revs.			
	Inches.	Inches.		Inches.	Inches.	
Surface, .	23	23	62	29·8	29	60
			72	29·8	28·75	72
Surface, .	6½	6	180	30·5	29·8	61
			250	30·8	29·6	83
Jet, . .	12	10	128	30	28·25	88
Jet, . .	14	10	75	30·5	28·5	90

TABLE SHOWING THE GALLONS OF WATER DISCHARGED AT A GIVEN NUMBER OF REVOLUTIONS FOR LIFTS OF 10 AND 18 FEET BY THE "BON ACCORD" CENTRIFUGAL PUMP.

Size of Pump and Diameter of Pipes.	Approximate Quantity of Water Discharged per Minute.	Approximate Number of Revolutions per Minute.		Diameter and Width of Pulley.
Inches.	Gallons.	10-Foot Head.	18-Foot Head.	Inches.
2	60 to 80	1,000	1,350	$3\frac{1}{2} \times 2\frac{1}{2}$
3	140 ,, 180	980	1,300	4 × 3
4	265 ,, 330	835	1,115	5 × 4
5	360 ,, 500	700	940	6 × 5
6	550 ,, 700	620	840	$7 \times 7\frac{1}{2}$
7	800 ,, 900	550	720	8 × 8
8	1,000 ,, 1,250	490	660	$10 \times 8\frac{1}{2}$
9	1,300 ,, 1,500	490	660	$11 \times 8\frac{1}{2}$
10	1,600 ,, 1,900	430	565	12 × 9
12	2,200 ,, 2,700	345	490	14 × 9

The makers state, that the number of revolutions per minute of their steam-driven pumps will vary with the heights or lifts. The small sizes, when circulating water through a surface condenser, will probably run at from 300 to 400 revolutions per minute, while, for larger sizes, may not exceed 250 to 300 revolutions per minute.

Centrifugal pumps designed for higher lifts than those given in the above table—say, from 25 to 50 feet or more—are provided with fans of larger diameter than are used for the lower-lift types, in order to obtain the required peripheral velocity of the impeller wheels without driving them at such rates as would cause inconvenience.

TABLE SHOWING THE TEMPERATURE AND PRESSURE OF AQUEOUS VAPOUR IN CONDENSERS AS INDICATED BY THE VACUUM GAUGE.

Inches of Vacuum.	Abs. Pressure. Lbs. per Sq. Inch.	Temperature. Degrees Fahr.	Inches of Vacuum.	Abs. Pressure. Lbs. per Sq. Inch.	Temperature. Degrees Fahr.
0	14·697	212·00	15	7·329	178·96
0½	14·451	211·15	15½	7·084	177·44
1	14·206	210·29	16	6·838	175·87
1½	13·960	209·42	16½	6·592	174·26
2	13·715	208·54	17	6·347	172·59
2½	13·469	207·64	17½	6·101	170·86
3	13·223	206·73	18	5·856	169·07
3½	12·978	205·80	18½	5·610	167·23
4	12·732	204·86	19	5·364	165·31
4½	12·487	203·91	19½	5·119	163·32
5	12·241	202·94	20	4·873	161·25
5½	11·995	201·95	20½	4·628	159·09
6	11·750	200·95	21	4·382	156·83
6½	11·504	199·93	21½	4·136	154·46
7	11·259	198·89	22	3·891	151·97
7½	11·013	197·83	22½	3·755	149·34
8	10·767	196·75	23	3·410	146·55
8½	10·522	195·65	23½	3·164	143·59
9	10·276	194·53	24	2·918	140·42
9½	10·031	193·39	24½	2·673	137·01
10	9·785	192·23	25	2·427	133·32
10½	9·539	191·03	25½	2·172	129·31
11	9·294	189·81	26	1·926	124·89
11½	9·048	188·57	26½	1·680	119·94
12	8·803	187·30	27	1·435	114·34
12½	8·557	186·00	27½	1·189	107·84
13	8·311	184·66	28	0·944	100·05
13½	8·066	183·29	28½	0·698	90·24
14	7·820	181·88	29	0·453	76·80
14½	7·575	180·44	29½	0·207	54·21

DIAMETERS OF EXHAUST PIPES, STEAM CONDENSED PER HOUR, AND I.H.P. OF ENGINES WITH EJECTOR CONDENSERS.

Diameter of Exhaust Pipe in Inches.	Lbs. of Steam Condensed per Hour.	Gallons of Condensing Water Required per Hour.	I.H.P. of Engines (depending upon Temp. of Condensing Water, &c.).
1½	200	550	5 to 10
2½	400	1,100	10 ,, 20
3	800	2,200	20 ,, 40
4	1,500	4,000	35 ,, 70
5	2,000	5,500	50 ,, 100
6	3,000	8,250	75 ,, 150
7	4,000	11,000	100 ,, 200
8	6,000	16,500	150 ,, 300
10	8,000	22,000	200 ,, 400

Splitting, Corrosion, and Pitting of Condenser Tubes.—The author has had an exceptional opportunity of becoming acquainted with the various kinds of defects and failings to which surface condenser tubes are liable, owing to his having been retained as a mechanical and electrical expert in the case of the P.S. "Strathmore," which was fought out before the Court of Session at Edinburgh in 1903 and 1904. But, since a thorough understanding of the whole subject involves a combined knowledge of mechanics, chemistry, electro-chemistry, and metallurgy, we have only room here for a few facts, and must refer the student who desires to follow these up with a more extensive study of this subject to the following papers which have been read and discussed recently before several of the leading Engineering institutions, as well as to what appears at the end of Lecture XXVIII. on the "Corrosion of Boilers," since the two subjects have many points in common.*

Composition of Condenser Tubes.—When surface condensers were first applied to marine engines in 1833, and even up to 1870, the material of which the tubes were made was frequently copper, owing to it being an excellent conductor of heat, and exceedingly ductile. But it was found, that the acids derived from the fatty oils or greases then used for lubricating the cylinders, and which were swept over to the condensers by the exhaust steam, dissolved some of the copper of the tubes and produced soluble salts of that metal, which were pumped into the boilers with the feed-water, where they caused great injury to the iron surfaces.† Conse-

* "The Decay of Metals," by James Taylor Milton, M.Inst.C.E.; and Wm. James Larke, vol. cliv., Part iv., *Proc. Inst. C.E.*, 1903. "Corrosion in Metal Pipes on Board Ship," by A. W. Stewart, M.I.E.E., *Trans. Inst. N.A.*, April, 1903. "Corrosion of Condenser Tubes and of Pipes Conducting Sea-Water," by Prof. E. Cohen of Amsterdam, *Trans. Inst. N.A.*, March, 1902. "The Different Reports of the Alloys Research Committee of The Inst. of Mech. Engs." "The Crystalline Structure of Metals," by Prof. J. A. Ewing, F.R.S., and Walter Rosenhain, *Phil. Trans. of The Royal Society of London*, first paper, 1899; second, 1900.

† See *A Manual of Marine Engineering*, by A. E. Seaton, M.Inst.C.E.

quently, copper tubes have been entirely discarded since the latter date. Now, they are made of various compositions of brass. The chief aim is to produce a neutral chemical and electrical composition, which shall be not only sufficiently ductile to be solid-drawn from the ingot without splitting into the form of a homogeneous, strong, reliable tube with a minimum number of annealings, but at the same time withstand the decaying action of salt and tidal waters, as well as cause a minimum of galvanic action on the condenser shell and the boilers.

The Admiralty, foreign governments, and some of the larger steamship companies insist upon the brass tubes being tinned inside as well as outside. If this tinning be well and uniformly done all over their surfaces, then it does prevent to a great extent the local corrosive action of the sea-water on the tubes, as well as the formation of salts, which would hurt the condenser shell and the boilers. Tinning, however, adds about 1·5d. per lb. to the expense of the tubes. When tin or nickel is mixed with the copper and zinc (or spelter) in the ingot before being drawn, care must be taken that not more than 1 per cent. of either shall be added to the brass composition used, otherwise the metal will be rendered too hard for drawing, and it is doubtful whether the addition of this small percentage of tin or nickel is so effectual as good tinning.

Admiralty tubes are always made of 70 per cent. of the best selected copper, 29 per cent. of Silesian spelter, and 1 per cent. of pure tin. They are then tested by hydraulic pressure to 300 lbs. per square inch before being passed. *Ordinary mercantile marine tubes* are usually made of 68 per cent. copper and 32 per cent. zinc spelter. *The special tubes* of the P.S. "Strathmore" were made of 70 per cent. *pure* electro-deposited copper and 30 per cent. of *pure* electro-deposited zinc, melted together and subjected to great hydraulic pressure in the ingot before being solid-drawn, with thereafter frequent intermediate annealings in the most careful and scientific manner possible. They were tried under, perhaps, the worst possible conditions, for the boat plied along that by no means pellucid stream the Clyde—from Glasgow to its estuary—where pure salt water was in circulation. This mixing of its "cooling draughts" had a most peculiar effect in producing what were variously termed "copper spots," "dezincification," and "cuprification," so that the tubes developed "copper measles" and perforations of a most peculiar, unique, tantalising, and previously uninvestigated disease. Such tubes might have had a long and useful life if subjected only to pure fresh or pure salt water. It is quite common to find some condenser tubes lasting for a dozen or more years when trading solely on long trans-ocean voyages, but the same kind of tubes often give trouble within a year or two when dock or tidal waters, or alternate tidal and sea-waters are passed through and left in them.

Condenser Tube Faults.*—These may be divided into (1) splitting due to being too hard; (2) corrosion, more or less dispersed on the outside or the inside, due to electro-chemical action either on their outer or inner surfaces; (3) dezincification in particular places from the inside only, also

* A number of persons who do not thoroughly understand electrical action and electric lighting circuits, attribute the electro-chemical corrosion of condenser tubes to stray leaking currents from the dynamos or cables and wires on board steamers fitted with the electric light. The author has tested this matter, and proved that it would require a combination of exceptional circumstances for such action to take place. Of course, each case must be thoroughly investigated and tested by an expert before a final decision can be correctly given.

due to electro-chemical action; (4) erosion on the inside when the vessel is trading in shallow, sandy-bottomed rivers; (5) silting up, due to muddy, dirty rivers; and (6) salting up. This latter fault only occurs on the top row of the tubes opposite the exhaust pipe, where the tubes are subjected to a high temperature.*

Corrosion of Condenser Ends and Doors.—Condenser ends and doors are generally made of cast-iron. If these and the other cast-iron surfaces which are subjected to the passage of the salt circulating water be not specially protected, they are very liable to become strongly pitted and corroded. They should be frequently and thoroughly painted and cemented with an anti-corrosive or neutral paint or cement. The corrosion occurs, and is largely if not wholly, due to the natural electrical difference of potential between the end brass tube plates with their tubes and the bare cast-iron surfaces when both are immersed or connected by aërated sea-water. This potential difference may approach half a volt, and is sure to play the part of a double mischief maker. In the first place, it causes the iron to give way in presence of the brass tubes; and, secondly, it leaves the more or less pure carbon of the cast-iron free to be swept inside and lodged upon the brass tubes, where it creates electrical local action of fully half a volt. The tubes are thus corroded or pitted, because the tube is electro-positive to the carbon; whereas, the tube is electro-negative to iron. Good zinc plates securely fixed to the iron shell of the condenser, where the condensing salt water *both enters and leaves* each row of tubes, is a fairly good protection for the condenser ends and its cast-iron doors, since the zinc is nearly twice as strongly electro-positive towards the brass tubes as is the cast-iron. The zinc plates are therefore eaten away in preference to the iron surfaces. The zinc plates should, however, be carefully examined at the end of each voyage to see, that they have not become rotten and that they are still making good electrical contact with the cast-iron, as well as that the surfaces of the zinc are electrically active, and thus protective.

---

* The author has several specimens of this fault, wherein the salt has been so uniformly deposited in nine thin cylindrical layers that you can count the number of times which the ship stopped in harbour or anchored on a voyage from Scotland to India and back! He has also made many speed tests on the potential difference which exists between different kinds of condenser tubes and carbon, cast-iron, wrought-iron, &c., when these metals are arranged in pairs, with sea-water and with Clyde water, at different temperatures as the electrolyte. But since the information derived from these experiments will be more appropriate for the use of electricians, he has reserved the details and curves for his Text-Book on Magnetism and Electricity.

LECTURE XXV.—QUESTIONS.

1. Sketch in section the piston of a steam cylinder for a land engine, showing the attachment of the piston-rod and the mode of packing the piston.

2. Describe, with a sketch, the construction of a piston-rod and piston, with metallic packing, suitable for a horizontal land engine, and show how the several parts are fitted together.

3. Sketch and describe some method of packing a high-pressure marine-engine piston so as to make it steam-tight. Describe also the gland and mode of packing for the piston-rod, stating the kind of packing which you would employ.

4. Sketch the piston for a large low-pressure cylinder marine engine, showing the metallic packing ring, and the manner in which the joint in this ring is made, as well as the contrivance for holding the same in its place. How was a piston formerly packed with hemp? What is the junk ring?

5. Sketch and describe Kirk's solid cone-shaped steel piston and corresponding piston-rod. Mention any advantages and disadvantages which this form of piston has in your opinion over the ordinary hollow form for large fast-speed engines.

6. Sketch the most common and serviceable form of crosshead and guide for a vertical marine engine. How are the rubbing surfaces kept oiled? Sketch the form of crosshead and guide employed in a horizontal marine or land engine. Indicate how the rubbing surfaces are lubricated.

7. Give complete free-hand sketches (side view and plan) of a marine engine connecting-rod, and explain how the various parts are machined and fitted together, as well as how the bearings are kept lubricated when the engine is working.

8. Describe, with sketch, some mode of constructing the end of a marine engine connecting-rod, pointing out the provisions made to allow for wear and to reduce friction.

9. Sketch the crank shaft end of the connecting-rod of a marine engine, and describe the means employed for lubricating the rubbing surfaces. Sketch and describe the crank shaft for a large marine engine. Why are large crank shafts made in different pieces, and how are these put together and fixed?

10. Sketch and describe, by an index of parts, a complete line of screw propeller shafting, with the stern tube and screw complete. Be particular in showing the position, fixing, and form of the various bearings, and explain how the thrust of the propeller is imparted to the ship.

11. In what way is the thrust of a propeller shaft communicated to the vessel? Explain your answer by sketches.

12. Sketch a section through the thrust block of a screw propeller, and state the materials employed for the different parts. Explain clearly the principle of construction and the difficulties to be overcome.

13. In a jet condenser the temperature of the injection water is 60° F., that of the water after condensation is 100° F., and the latent heat of the steam which enters the condenser is 1,016 thermal units, the temperature of the steam being then 140° F , find the number of pounds of injection water. *Ans.* 27·3 lbs.

14. Sketch a double-acting circulating pump and explain its action. Find the diameter of such a pump in an engine which condenses steam, producing $1\frac{3}{4}$ cubic feet of water per minute, and requires 36 times the amount of water in the condenser, the stroke of the pump being 15 inches and the number of revolutions 100 per minute.

15. What is surface condensation? How is it carried out in marine engines? Which parts give way to corrosion, and why?

16. Distinguish between a surface condenser and a jet condenser. Describe the method of carrying out each system of condensation, making any sketch you think necessary.

17. Describe a surface condenser, as applied to a marine engine. Indicate by arrows the directions taken by the steam and condensing water, and explain the whole of the parts and action by an index of parts.

18. Mention some of the advantages of a surface condenser as applied to marine engines, and draw in section a surface condenser, showing the mode in which water is caused to circulate through it. How are the tubes fitted so as to avoid leakage?

19. A surface condenser consists of 1000 brass tubes, each 6 feet long and ¾ inch outside diameter, what amount of cooling surface does this give? Supposing that such a surface condenser is to be fitted to an engine, what pumps, valves, &c., would be required, and how should you arrange them in order to put the apparatus in working order? *Ans.* 1,178 sq. ft.

20. A surface condenser has 1,725 tubes, each 6¼ feet long, and ¾ inch outside diameter, what amount of condensing surface do they give? Write down two numbers which express pretty nearly the relative conducting powers of copper and iron. How are the condenser tubes usually fitted and kept tight? *Ans.* 2,200 sq. ft. Roughly as 6 to 1, see p. 57.

21. In what way is the condenser of a marine engine freed from the air and water which would impede its action? How is the degree of exhaustion within the condenser ascertained?

22. Sketch a section through a single-acting vertical air pump, showing the construction of the bucket and also the position and construction of the valves.

23. The barrel of a single-acting air pump being vertical, sketch a section through it, showing the bucket or piston with metallic ring packings, and an india-rubber valve and guard, also show the gland and packing of the pump-rod. Sketch also the foot and delivery valves, and show their position and connection with the barrel of the pump.

24. Sketch a section through the air pump of an engine, showing the position of the valves. Describe an india-rubber disc valve or metallic valve as fitted to an air-pump bucket.

25. Make a sectional sketch of an air-pump chamber, with the bucket and valves as adapted for a double-acting pump in a marine engine. Why is the use of iron avoided in this part of the engine? What packing is usually employed?

LECTURE XXVI.

LOCOMOTIVES.

CONTENTS.—Early History of the Locomotive Engine—Details of a Modern Locomotive designed for the Great Southern and Western Railway of Ireland—Giffard's Injector—Automatic or Self-Acting Injectors—Combination Injectors—Compound Locomotives—Advantages and Disadvantages of Compound Locomotives—Different Types of Compound Locomotives—Other Means of Increasing the Efficiency of the Locomotive.

THE subject of Locomotive Design and Construction has now become a highly specialised branch of steam engineering, possessing a literature of its own.* With the limited space at our disposal we cannot attempt a detailed description of the subject, but will content ourselves with a short glance at its history, and will conclude with a detailed description of a modern type of locomotive and of a few points of general interest.

* Students who are particularly interested in the Locomotive Engine should refer to—

(1) Professor Thurston's *History of the Steam Engine* for a popular description of the many attempts at, and ultimate success of, Steam Locomotion on Railways.

(2) *Locomotive Engineering and the Mechanism of Railways*, by Zerah Colburn, C.E., and Daniel Kinnear Clark, M.Inst.C.E., published by William Collins & Sons, Glasgow.

(3) A paper, with discussion, on "Compound Locomotive Engines," by Francis W. Webb, M.Inst.C.E., Loco. Supt., L. & N.-W. Ry., *Proc. Inst. Mech. Engs.*, 1883.

(4) "The Construction of Locomotive Engines," by William Stroudley, M.Inst.C.E., late Loco. Supt. of the L. B. & S. C. Ry. See vol. lxxxi., *Proc. Inst. C.E.*

(5) *Modern Locomotive Construction*, by J. G. A. Meyer, published by John Wiley & Sons, New York, or Chapman & Hall, Limited, London. 1894.

(6) *Manual of Locomotive Engineering*, by W. F. Pettigrew, published by Charles Griffin & Co., London. 1899.

(7) *Locomotive Mechanism and Engineering*, by H. C. Reagan, published by Chapman & Hall, Limited, London. 1902.

(8) *Modern Locomotive Practice*, by C. E. Wolff, B.Sc., A.M.Inst.C.E., published by The Scientific Publishing Company. 1903.

Early History of the Locomotive.—In 1680, Sir Isaac Newton proposed the adoption of a Steam Carriage having a spherical boiler half filled with water, mounted on a four-wheeled carriage. A fire was to be placed underneath the boiler for raising steam in the same, and a nozzle projecting aft from the steam space, so that by the reaction of the issuing steam on the air (as in Hero's engine) the carriage should be propelled forward. This was probably the first suggestion for applying the force of steam to locomotion on land.

In 1759, Dr. Robinson suggested to Watt the application of the then known steam engine to land locomotion.

In 1784, Watt patented a locomotive engine, and in the same year Murdoch, Watt's assistant, made a working model which went at a rapid rate along the road. It was fitted with a grasshopper engine, and the model is preserved in the Patent Museum at South Kensington as an interesting relic.

In 1802, Trevithick and Vivian patented a Steam Locomotive having a high-pressure engine, the model of which is also in the Patent Museum at South Kensington. In 1803–4, Trevithick and Vivian built a full-sized locomotive at Camborne, which drove from there to Plymouth, a distance of 90 miles, before being shipped there for London, where its powers were publicly exhibited for some time.

In 1813, Hedley patented a locomotive with smooth wheels to work on a smooth rail. Hitherto, it had been generally supposed that rack or toothed rails and wheels were necessary in order that the locomotive might be able to draw a sufficient load, but Hedley's one drew eight loaded coal waggons at a speed of 5 miles an hour, with a steam pressure of 50 lbs. on the square inch. He it was who first turned the exhaust pipe up the chimney and contracted its end, in order to intensify the draught in the fire and flues.

In 1814, George Stephenson (who gave the real practical start to the locomotive) built his first engine at Killingworth.* For the next fifteen years, Stephenson, as well as several other engineers, worked most earnestly at making and perfecting the locomotive, until, in 1829, the famous competition trial, under certain stipulated conditions, took place between (1) the "*Novelty*," constructed by Messrs. Braithwaite & Ericsson (the latter being the person who first successfully introduced the screw propeller), (2) the "*Sansparíel*," by Hackworth, (3) the "*Perseverance*," by Burnstall, and (4) the "*Rocket*," by Stephenson, when the last proved the most successful engine, far exceeding even the most sanguine expectations of its designer.

* See *Life of George Stephenson*, by Smiles.

From 1829, until the present date, the history of the locomotive is a vast series of improvements in details, far too varied and numerous for us to mention here, until now it is one of the most perfect and beautiful of all the machines with which the engineer has to deal, and of which he is justly proud.

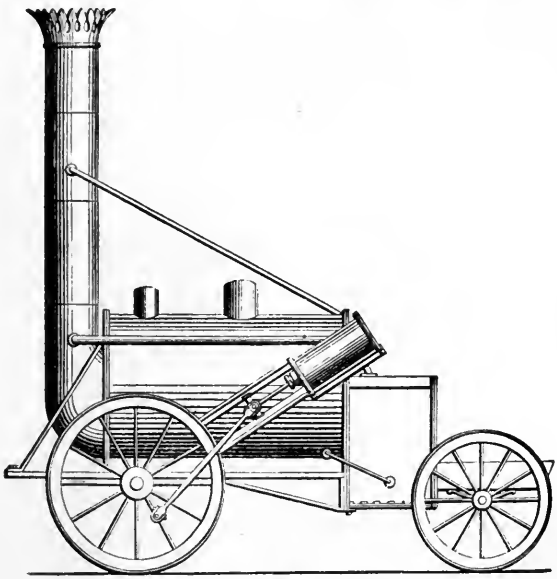

THE "ROCKET," 1829. *

Example of a Modern Locomotive.—The locomotive illustrated on p. 508 is in many ways typical of the most advanced ideas in engineering practice, as conditioned by the ever-growing demand for powerful and economical locomotives operating heavy express passenger traffic. The design was introduced in 1915 by Mr. E. A. Watson, M.I.M.E., M.I.C.E., Locomotive Superintendent of the Great Southern and Western Railway of Ireland, for fast passenger service between Dublin and Cork; a line presenting several features of unusual difficulty, notably on the Cork-Kilbarry section, where gradients as severe as 1 in 60 are encountered.

An inspection of the annexed drawings will make clear the principal characteristics of this engine, which combines consider-

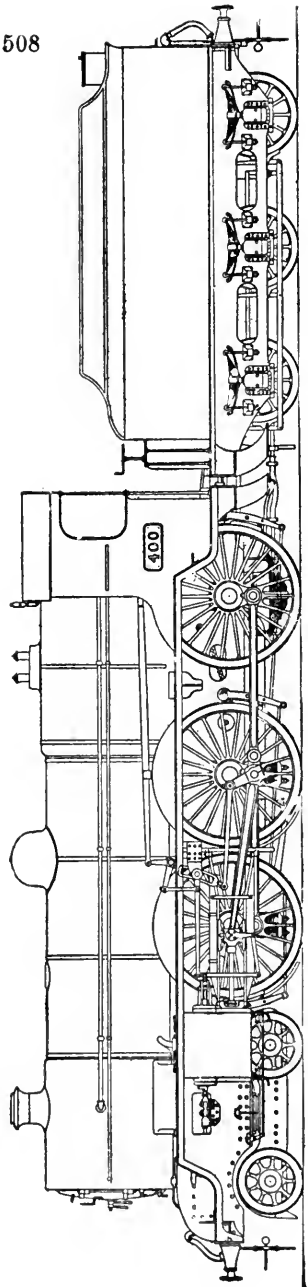

4-6-0 Express Engine, No. 400, Great Southern and Western Railway. Built 1916.

able boiler power with mechanical arrangements of great efficiency.

The firebox is of the Belpaire type with sloping firegrate, and the boiler barrel is made up of two telescopic cylindrical rings of which the smaller is united to the smoke-box. This latter is much extended, and rests upon a steel saddle casting containing passages forming connections to which the inside and outside steam and exhaust pipes are jointed. The regulator is situated in the dome, whence the steam passes through a superheater of the Schmidt pattern consisting of 24 elements and unprovided with dampers.

The cylinders are four in number, all equal in volume and fed directly with high-pressure steam. They are divided into two groups, of which the inside cylinders, with their valves, are formed in one casting, and are placed over the leading axle of the bogie truck, thus leaving adequate space for the connecting-rods driving the first coupled axle. The outside cylinders act upon the intermediate pair of coupled wheels, the working stresses being thereby divided between the two axles; and as the adjacent inside and outside cranks are set at an angle of 180° with reference to each other, the reciprocating moments of each group of driving motion are neutralised to a great extent,

Moreover, the division of the total power developed between four cylinders and cranks greatly reduces the load per unit area of bearing surface, and also permits a reduction in weight of individual moving parts, circumstances both highly favourable to the durability of the working gear which amply compensate for the somewhat augmented prime cost of a four-cylinder engine as compared with machines having but two sets of motor mechanism.

The steam is distributed by piston valves arranged for internal admission, so that the packing glands of the valve spindles are relieved from the deleterious effect of contact with highly superheated live steam, whilst the piston form of the valve diminishes working friction and allows of short ports of liberal area.

The Walschaerts valve gear, by which these valves are actuated, has unfortunately long been neglected in this country, though in extensive use abroad for many years past, but the onerous conditions of modern locomotive service have recently caused attention to be directed to this admirable gear, which is now receiving from many quarters the recognition to which it is justly entitled by its intrinsic merit. Its salient features may be summarised as follows:—(1) Excellent and equal steam distribution, (2) constant lead, (3) little power absorbed in working, (4) suitability for external location in conjunction with outside cylinders, (5) lightness of moving parts, and (6) ease in handling for reversal or variation of cut-off.

In the locomotive under notice, two sets of valve motion suffice for actuating the four piston valves; the tail rod of the outside valve being connected to the inside valve spindle through a short link and lever oscillating in a horizontal plane. The number of moving parts is thus reduced to a minimum, and this simplicity is further enhanced by the disposition of the running boards and splashers which leaves the outside motion entirely unobstructed and free for inspection, cleaning, etc., as seen from the small external elevation reproduced.

By-pass and circulating valves are provided to obviate the loss of superheat, whilst steam is shut off, and at the same time protect the superheat tubes from overheating.

The locomotive is suspended by coil springs for the leading and middle coupled wheels, whilst flat plate springs are employed for the trailing pair. The front end is carried upon a four-wheeled swing-link suspension bogie with inside framing.

The accessory fittings include the automatic vacuum brake, with blocks acting upon all coupled wheels; two 3-inch Ross

patent "pop" safety valves; two vacuum Detroit lubricators and two 10-mm. injectors, which discharge the feed to a perforated tray in front of the dome, causing the water to be delivered in the form of a heated spray before coming into contact with the boiler plates.

The leading dimensions of this engine are as follows:—

Cylinders (4)—	
Diameter,	14 ins.
Stroke,	26 ins.
Diameter of piston valves,	8 ins.
Wheels—	
Coupled, diameter,	6 ft. 7 ins.
Bogie, diameter,	3 ft. 0 ins.
Wheel Base—	
Rigid,	15 ft. 3 ins.
Total engine,	27 ft. 1 in.
Boiler—	
Barrel, diameter (inside),	5 ft. $0\frac{1}{2}$ in.
Barrel, length,	14 ft. $1\frac{11}{16}$ ins.
Height from rail to centre,	8 ft. 11 ins.
Tubes—	
Number of small tubes,	173
Diameter of small tubes,	$2\frac{3}{4}$ ins.
Number of large flues,	24
Diameter of large flues,	5 ins.
Heating Surface—	
Firebox,	158 sq. ft.
Tubes,	1,614 sq. ft.
Total,	1,772 sq. ft
Superheating surface,	440 sq. ft.
Grate area,	28 sq. ft.
Working pressure,	175 lbs. per sq. in.

WEIGHT—

Upon bogie,	20 tons 0 cwt.
1st driving axle,	17 tons 6 cwts.
2nd driving axle,	17 tons 1 cwt.
Trailing axle,	16 tons 7 cwts.
Total,	70 tons 14 cwts.

TENDER—

Diameter of wheels,	3 ft. 9 ins.
Wheelbase,	12 ft. 4 ins.
Water capacity,	3,345 gallons.
Coal capacity,	7 tons.
Total weight,	37 tons 10 cwts.

Weight of engine and tender,	108 tons 4 cwts.
Wheelbase—engine and tender,	49 ft. 4 ins.
Length over buffers,	58 ft. 10¾ ins.

TRACTIVE FORCE—

Per lb. pressure,	129 lbs.
Total at 120 lbs. M.E.P.,	6·9 tons.

We are indebted to the courtesy of Mr. E. A. Watson for permission to make use of the accompanying drawings, and to the Locomotive Publishing Company, Ltd., London, for the loan of the printer's blocks.

Giffard's Injector.—Injectors are chiefly used for locomotives, these being seldom fitted with feed pumps in modern practice, but they are also largely used for land boilers. They will draw water from 2 feet to 12 feet according to size, but the water supply must be continuous and must not be hotter than 135° Fah. for low pressures, and 105° Fah. for the highest pressures. If these temperatures are exceeded, so much water is required to condense the steam that the velocity of the steam is too much reduced in driving forward the large volume of water. The injector illustrated on the following page is the form in most general use

for all purposes, as made by Messrs. Sharp, Stewart & Co., Manchester, but a number of patent forms are also made by different firms, which are adapted for special purposes.

Steam from the boiler enters the uppermost branch pipe, and is admitted to the injector through a conical nozzle. The admission of the steam is regulated by a vertical spindle, the lower end of which fits accurately into the nozzle, and this spindle may be screwed up and down by the small hand wheel shown at the top of the diagram. The water with which the boiler is to be fed enters the injector on the opposite side from the steam, and through a branch a little below the steam pipe branch. It passes round the outside of the conical nozzle through which the steam rushes, and the supply is regulated by a hand wheel at the side, which works a small pinion inside the injector, and moves a tube up and down. The branch pipe below the water entrance is for the overflow,

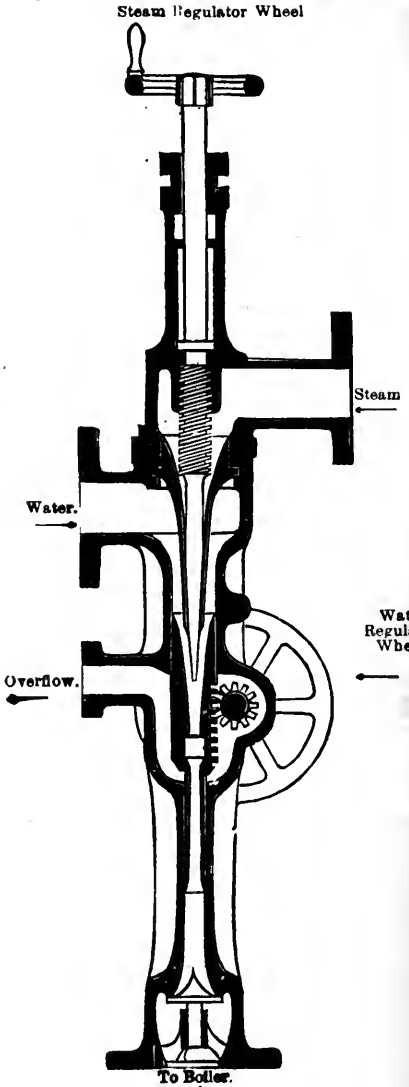

GIFFARD'S INJECTOR

and the bottom of the injector, which is fitted with a back pressure valve, communicates with the check valve on the side of the boiler. By admitting steam and water by their respective branches, the steam is able to drive the water into the boiler against a pressure which is equal to, or it may be greater than its own. This statement at first sight may seem paradoxical, but it is nevertheless the case, and the explanation is as follows. The velocity of an issuing jet of steam is many times greater than that of a jet of water issuing under the same pressure, and if steam, while issuing from a boiler, be condensed to water, but not reduced in velocity to that of water issuing under the same pressure, it is then capable of overcoming the pressure of the water in its own boiler. This is exactly what takes place in the Giffard's injector. The steam enters the injector, and, passing down the conical nozzle, is condensed on coming into contact with the feed water, without losing its velocity, further than that due to the friction of the passages. The vacuum formed in the injector by the condensation of the steam causes more water to rush into the injector, and this feed water is carried on by the force of the condensed steam jet into the boiler. The velocity of the steam jet is of course reduced by imparting a high velocity to this volume of water, but it is not reduced nearly so low as that of a jet of water issuing under the same pressure, and hence it is able to overpower and drive back the water in the boiler.

The injector is lighter, takes up less room, is quite as certain in its action, and absorbs less power than a feed-pump, for it is only in action when required; besides which you can always know when it is working satisfactorily, by watching the overflow and the vibration caused by the passing steam and water through the feed-pipes.

Automatic or Self-Acting Injectors.—The success of the well-known Giffard injector, as previously illustrated and described, has been chiefly due to the fact, that both its steam and water cones were adjustable to suit various conditions of pressure. It is, however, non-automatic, since the adjustment of the steam and water cones has to be effected by two separate movements, and, owing to the sliding cone being in the water chamber, it has the disadvantage that its rack and pinion are liable to become clogged with sediment. For these reasons, automatic or self-acting injectors are now being employed. They differ in their action from non-automatic injectors in that they start, without any manipulation, directly the steam and water are turned on. They will re-start instantaneously and automatically, should the jet by any means be accidentally broken by either jolting, admission of air with the water supply, or other causes.

Combination Injectors.—The use of combination injectors on locomotives is due to their compactness, neatness and general simplicity. For example, the following fittings are dispensed with:—Steam valve, clack box, water cock, two copper pipes (steam and delivery), together with their entire complement of seatings, flanges and rods. The water and overflow pipes are the only external pipes, and these are not under pressure. The self-contained fittings of combination injectors, as well as all the cones, are readily accessible and easy to withdraw for repairs.

Regulating Handle, with its Pointer A.

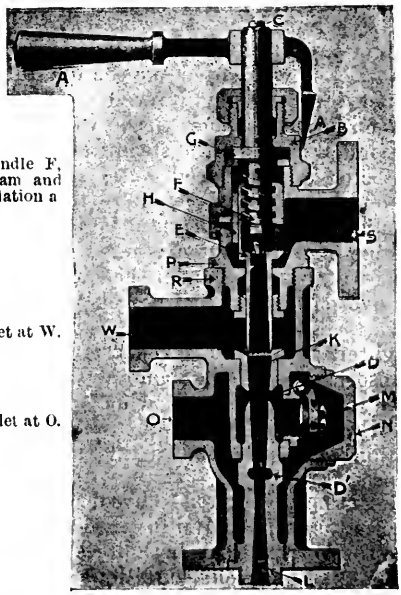

Screwed Spindle F, controls Steam and Water Regulation a S and K.

Water Inlet at W.

Overflow Outlet at O.

Scale of Pressures on the Ring at B.

Steam Inlet S

Movement of Pointer A, advances or withdraws Steam Cone and regulates Water Admission from W through K.

Automatic Restarting Valve M.

Delivery Outlet L

ONE-MOVEMENT SELF-ACTING INJECTOR.
By Holden & Brookes, Manchester.

To Work the Injector.—The accompanying illustration shows a section of a "One-Movement Injector," which is automatic and self-adjusting. The three simple operations of (1) turning on the steam, (2) starting the injector, and (3) adjusting the steam and the water cones to their correct ratio, are performed by

turning the regulating handle A, with its pointer to the figure on the scale ring B, which represents the working boiler pressure. The injector is then set to work.

In turning the handle round to its correct position, the quick pitch threads which are cut upon the spindle F, lift the steam valve. The spindle F, is restrained from axial motion by the collar G. The steam cone E, may slide axially, but is prevented from turning by the feather key H. This partial turning of the handle A, also rapidly lowers the cone E, towards the combining cone K, thus regulating the supply of water at W in the correct ratio to the quantity of steam admitted at S.

The condensed steam passes through the combining cone K, to the delivery cone and outlet L, to boiler. Should the action of the injector be interrupted in any way, the water and steam will pass through the air spaces D and D'. This will lift the re-starting valve M, and allow the steam and water to pass out by the overflow outlet O.

The body of the injector is made in two parts P and R. N is the overflow cap, which can easily be removed for examination of the re-starting valve M, and C is the lubricating hole for the spindle F.

When the pointer A, is at the position marked "shut" on the scale ring B, the coned end of the spindle F, acts as a stop valve and cuts off the steam from the steam cone E. This injector is designed to work at any pressure between 15 lbs. and 180 lbs. pressure per square inch, taking the feed water at 125° F. and 102° F. respectively, although it can be made and used for still higher pressures. It is attached to locomotive boilers as a combination injector in the manner previously mentioned.

Compound Locomotives.—Previous to 1879, M. Mallet compounded a locomotive for the Bayonne and Biarritz Railway, and—

In 1881, Mr. Webb constructed the "*Experiment*," a compound locomotive for the London and North-Western Railway, which made a daily run of 319 miles for more than a year, with the Scotch and Irish limited mails between London and Crewe. The two high-pressure cylinders are 13 inches diameter, while the low pressure one is 26 inches, and is placed centrally between them, the stroke in each case being 24 inches. During the time the engine was working on the above section, Mr. Webb states that the average consumption per train mile was only 26·6 lbs. of coal compared with 34·6 lbs. for the standard four-wheels, coupled passenger engines having two 17 inch cylinders with 24 inch

stroke doing precisely the same class of work, and with the same boiler pressure. Since then, Mr. Webb has built several compound engines for the London and North-Western Railway.

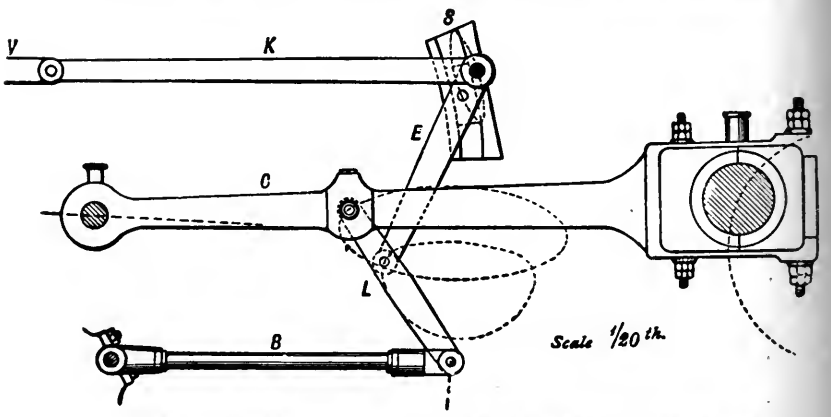

JOY'S VALVE GEAR AS FITTED TO WEBB'S COMPOUND LOCOMOTIVE.

(See Lecture XXI. for description of Joy's Valve Gear.)

One of these beautifully finished engines was shown at the "Inventions" Exhibition, South Kensington, in 1885, and attracted considerable attention. Many letters on the subject appeared during 1885 in *The Engineer*, *Engineering*, and other papers, where widely differing opinions were expressed by engineers as to whether any real saving upon the first cost, working, and upkeep was effected in the case of fast-speed passenger engines. But, generally speaking, it was allowed that in the case of goods engines there might be an advantage as a whole by using them, when trains could be run for long distances.

Such radical changes as those proposed by Mr. Webb are slower in taking general effect in the case of locomotives than of steamers, because railway companies find, that a considerable saving in working and in repairs is effected by having their engines as far as possible of two or three standard types, and with the various parts interchangeable amongst engines doing the same class of work. Whereas, a steam-shipping company may have every one of its steamers fitted with different styles and sizes of engines without any apparent loss; consequently, the spirit of invention and improvement has of late been much more rife in connection with the latter than the

ormer. When we think, however, of the many millions of miles un each year by locomotives in this country alone, and that the

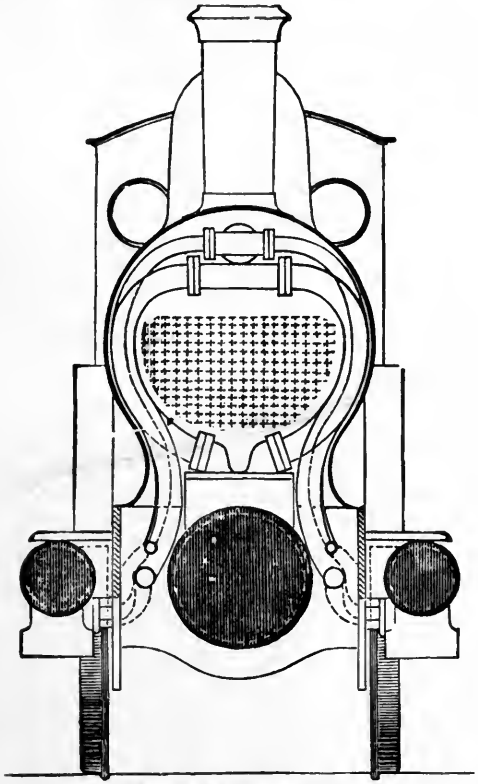

CROSS-SECTION THROUGH SMOKE-BOX—WEBB'S COMPOUND LOCOMOTIVE.

general introduction of a well-designed compound locomotive would enable several pounds of coal to be saved per mile, we are prone to believe that in time it will become generally adopted.

Advantages of Compound Locomotives. — In Mr. Edgar Worthington's Paper on "Compound Locomotives,"* as read before the Institution of Civil Engineers, he mentions the following advantages of the compound system as applied to the locomotive engine :—

1. A saving of fuel and water, due to the use and easy manipulation of high steam-pressures and large ratios of expansion.
2. A more uniform distribution of pressure on working parts, when running, than in the ordinary locomotive.
3. An increased power of starting a train.

But, Mr. C. E. Wolff, B.Sc., in his paper on "The Relative Advantages of Ordinary and Compound Locomotives,"† points out, that in considering the probable advantages to be derived from compounding, the special circumstances of each case must be carefully borne in mind, viz.:—

(1) The very variable nature of the work demanded.
(2) The wetness of the steam.
(3) The impossibility of condensing the steam.

The gain in economy must be obtained by a diminution in the cylinder condensation, or the use of a higher pressure than would be suitable in the case of an ordinary simple engine. With regard to the loads and speeds it is clear, that the amount of fluctuation will depend upon the gradients. In the case of a perfectly level line, the load and speed—except just at starting and stopping—may be kept constant. Hence, there is no reason to doubt that a very considerable gain may be effected by compounding in such an instance, so long as the engine can be kept on the same class of work.

The effect of the very wet steam with which a locomotive has to work, diminishes the gain due to compounding. With simple engines only about half the water evaporated is accounted for as steam by means of indicator diagrams. This is partly due to initial condensation in the cylinders (see Lecture XV.). It is worth noting that Mr. S. W. Johnson, late Locomotive Superintendent of the Midland Railway, estimates, that about 10 lbs. of water are evaporated per lb. of coal, although the gases in the smoke-box pass away at a temperature of about 900° F. Consequently, this water cannot possibly be all evaporated, and the wet steam supplied by the boiler is not surprising when we consider the large quantity of steam given off from each square foot of heating surface.

In a compound locomotive the necessary energy to start a

* See *Proc. Inst. C.E.*, vol. xcvi.
† See *Proc. Inst. C.E.*, vol. cxxxix.

train is obtained by admitting high-pressure steam from the boiler direct to the low-pressure cylinders.

Disadvantages of Compound Locomotives—(1) *The want of Adaptability to both Light and Heavy Traffic.* — Compound locomotives are usually designed for a particular class of work, and they must be kept to that class in order that they may be a success. If this is not attended to the engine will suffer from "over-cylindering," and slipping when starting. Also, the compound locomotive is not suitable for trains which make frequent stoppages. These stoppages naturally lead to such variable conditions of working, that their fundamental qualities as regards economy are practically cancelled under such circumstances.

Unless special arrangements be made for satisfactorily starting the compound locomotive, it will be of necessity a poor starter. For, at first only the high-pressure cylinders are available until there is some steam in the receiver of the low-pressure cylinder.

(2) *Greater Losses due to Radiation.*—Compound cylinders nearly always suffer a greater loss from radiation than those of the simple locomotive; because, there must be a greater surface of the cylinders exposed to the air. Except in the particular case of the inside cylinder of a two-cylinder compound, there must be two outside cylinders. These outside cylinders being more exposed to the rush of cold air, naturally suffer more from radiation than inside cylinders.

(3) *Increased Weight of Parts.*—Compounding leads to an increase in the number and the weight of the moving parts, as well as to additional complication both in the construction and in the working of the engine.

Different Types of Compound Locomotives.—Compound locomotives may be classified under three main divisions—viz., two-cylinder, three-cylinder, and four-cylinder engines.

Other Means of Increasing the Efficiency of the Locomotive.—The following illustration shows the internal firebox of one of the London and South-Western Railway Company's engines fitted with two groups of transverse water tubes $2\frac{3}{4}$ inches in outside diameter and inclined in opposite directions.* These tubes add 215 square feet of heating surface, and they also produce a rapid water circulation in the space between the internal and external fireboxes. Access doors are provided at each side of the external firebox, opposite the tubes, for examination or repairs.

* I am indebted to the Council of the Institution of Civil Engineers, and to Mr. Dugald Drummond, M.Inst.C.E., for their kind permission to illustrate and make an abstract of his remarks upon the paper, "Evolution of the Locomotive Engine," by William Prime Marshall, M.Inst.C.E. *Proc. Inst. C.E.*, vol. cxxxiii.

Mr. Dugald Drummond, M.Inst.C.E., Locomotive Superintendent, recognised the fact, that the absence of active circulation at this part of the boiler has been one of the outstanding defects of the locomotive.

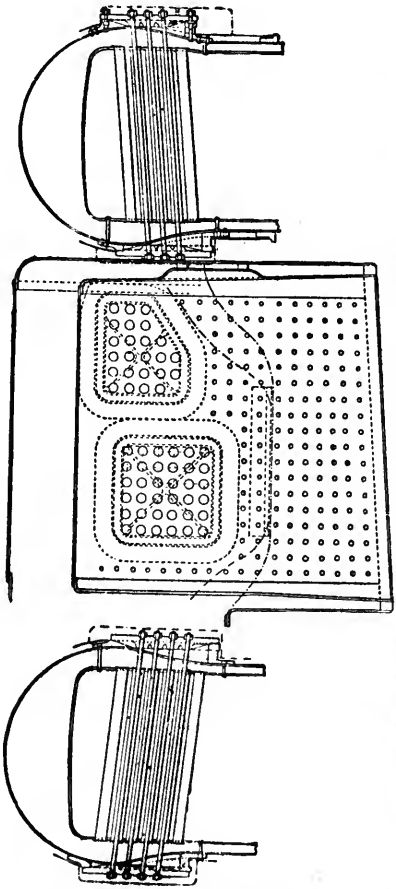

LOCOMOTIVE FIREBOX FITTED WITH TWO GROUPS OF TRANSVERSE WATER TUBES.
By Dugald Drummond, M.Inst.C.E., Locomotive Superintendent to the L. and S.-W. Railway Company.

With the success recently achieved by superheated steam applied to stationary and marine engines, several railway companies on the Continent, our Colonies, and in America have adopted some arrangement for obtaining superheated steam with

their locomotives. We are, however, still awaiting complete satisfactory results regarding the introduction of superheater tubes into locomotives. The space is so limited, the additional joints so many, and the ease with which the superheater tubes may become coated with soot so great, that the problem is really a much more difficult one to apply than with ordinary land and marine boilers.

APPENDIX.

EXAMINATION TABLES.

USEFUL CONSTANTS.

1 Inch = 25·4 millimetres.

1 Gallon = ·1605 cubic foot = 10 lbs. of water at 62° F. ∴ 1 lb. = 01605 cubic foot.

1 Knot = 6080 feet per hour. 1 Naut = 6080 feet.

Weight of 1 lb. in London = 445,000 dynes.

One pound avoirdupois = 7000 grains = 453·6 grammes.

1 Cubic foot of water weighs 62·3 lbs.

1 Cubic foot of air at 0° C. and 1 atmosphere, weighs ·0807 lb.

1 Cubic foot of Hydrogen at 0° C. and 1 atmosphere, weighs ·00557 lb.

1 Foot-pound = $1{\cdot}3562 \times 10^7$ ergs.

1 Horse-power-hour = 33000 × 60 foot-pounds.

1 Electrical unit = 1000 watt-hours.

Joule's Equivalent to suit Regnault's H, is { 774 ft.-lbs. = 1 Fah. unit. / 1393 ft.-lbs. = 1 Cent. "

1 Horse-power = 33000 foot-pounds per minute = 746 watts.

Volts × amperes = watts.

1 Atmosphere = 14·7 lb. per square inch = 2116 lbs. per square foot = 760 m.m. of mercury = 10^6 dynes per sq. cm. nearly.

A Column of water 2·3 feet high corresponds to a pressure of 1 lb. per square inch.

Absolute temp., t = θ° C. + 273°·7.

Regnault's H = 606·5 + ·305 θ° C. = 1082 + ·305 θ° F.

$p\, u^{1\cdot0646} = 479$

$$\log_{10} p = 6{\cdot}1007 - \frac{B}{t} - \frac{C}{t^2}$$

where $\log_{10} B = 3{\cdot}1812$, $\log_{10} C = 5{\cdot}0871$,

p is in pounds per square inch, t is absolute temperature Centigrade, u is the volume in cubic feet per pound of steam.

$$\pi = 3{\cdot}1416 = \frac{22}{7} = \frac{355}{113} = 10(\sqrt{3} - \sqrt{2}).$$

One radian = 57·3 degrees.

To convert common into Napierian logarithms, multiply by 2·3026.

The base of the Napierian logarithm is $e = 2{\cdot}7183$.

The value of g at London = 32·182 feet per second per second.

TABLE OF LOGARITHMS.

	0	1	2	3	4	5	6	7	8	9	1	2	3	4	5	6	7	8	9
10	0000	0043	0086	0128	0170	0212	0253	0294	0334	0374	4	8	12	17	21	25	29	33	37
11	0414	0453	0492	0531	0569	0607	0645	0682	0719	0755	4	8	11	15	19	23	26	30	34
12	0792	0828	0864	0899	0934	0969	1004	1038	1072	1106	3	7	10	14	17	21	24	28	31
13	1139	1173	1206	1239	1271	1303	1335	1367	1399	1430	3	6	10	13	16	19	23	26	29
14	1461	1492	1523	1553	1584	1614	1644	1673	1703	1732	3	6	9	12	15	18	21	24	27
15	1761	1790	1818	1847	1875	1903	1931	1959	1987	2014	3	6	8	11	14	17	20	22	25
16	2041	2068	2095	2122	2148	2175	2201	2227	2253	2279	3	5	8	11	13	16	18	21	24
17	2304	2330	2355	2380	2405	2430	2455	2480	2504	2529	2	5	7	10	12	15	17	20	22
18	2553	2577	2601	2625	2648	2672	2695	2718	2742	2765	2	5	7	9	12	14	16	19	21
19	2788	2810	2833	2856	2878	2900	2923	2945	2967	2989	2	4	7	9	11	13	16	18	20
20	3010	3032	3054	3075	3096	3118	3139	3160	3181	3201	2	4	6	8	11	13	15	17	19
21	3222	3243	3263	3284	3304	3324	3345	3365	3385	3404	2	4	6	8	10	12	14	16	18
22	3424	3444	3464	3483	3502	3522	3541	3560	3579	3598	2	4	6	8	10	12	14	15	17
23	3617	3636	3655	3674	3692	3711	3729	3747	3766	3784	2	4	6	7	9	11	13	15	17
24	3802	3820	3838	3856	3874	3892	3909	3927	3945	3962	2	4	5	7	9	11	12	14	16
25	3979	3997	4014	4031	4048	4065	4082	4099	4116	4133	2	3	5	7	9	10	12	14	15
26	4150	4166	4183	4200	4216	4232	4249	4265	4281	4298	2	3	5	7	8	10	11	13	15
27	4314	4330	4346	4362	4378	4393	4409	4425	4440	4456	2	3	5	6	8	9	11	13	14
28	4472	4487	4502	4518	4533	4548	4564	4579	4594	4609	2	3	5	6	8	9	11	12	14
29	4624	4639	4654	4669	4683	4698	4713	4728	4742	4757	1	3	4	6	7	9	10	12	13
30	4771	4786	4800	4814	4829	4843	4857	4871	4886	4900	1	3	4	6	7	9	10	11	13
31	4914	4928	4942	4955	4969	4983	4997	5011	5024	5038	1	3	4	6	7	8	10	11	12
32	5051	5065	5079	5092	5105	5119	5132	5145	5159	5172	1	3	4	5	7	8	9	11	12
33	5185	5198	5211	5224	5237	5250	5263	5276	5289	5302	1	3	4	5	6	8	9	10	12
34	5315	5328	5340	5353	5366	5378	5391	5403	5416	5428	1	3	4	5	6	8	9	10	11
35	5441	5453	5465	5478	5490	5502	5514	5527	5539	5551	1	2	4	5	6	7	9	10	11
36	5563	5575	5587	5599	5611	5623	5635	5647	5658	5670	1	2	4	5	6	7	8	10	11
37	5682	5694	5705	5717	5729	5740	5752	5763	5775	5786	1	2	3	5	6	7	8	9	10
38	5798	5809	5821	5832	5843	5855	5866	5877	5888	5899	1	2	3	5	6	7	8	9	10
39	5911	5922	5933	5944	5955	5966	5977	5988	5999	6010	1	2	3	4	5	7	8	9	10
40	6021	6031	6042	6053	6064	6075	6085	6096	6107	6117	1	2	3	4	5	6	8	9	10
41	6128	6138	6149	6160	6170	6180	6191	6201	6212	6222	1	2	3	4	5	6	7	8	9
42	6232	6243	6253	6263	6274	6284	6294	6304	6314	6325	1	2	3	4	5	6	7	8	9
43	6335	6345	6355	6365	6375	6385	6395	6405	6415	6425	1	2	3	4	5	6	7	8	9
44	6435	6444	6454	6464	6474	6484	6493	6503	6513	6522	1	2	3	4	5	6	7	8	9
45	6532	6542	6551	6561	6571	6580	6590	6599	6609	6613	1	2	3	4	5	6	7	8	9
46	6628	6637	6646	6656	6665	6675	6684	6693	6702	6712	1	2	3	4	5	6	7	7	8
47	6721	6730	6739	6749	6758	6767	6776	6785	6794	6803	1	2	3	4	5	5	6	7	8
48	6812	6821	6830	6839	6848	6857	6866	6875	6884	6893	1	2	3	4	4	5	6	7	8
49	6902	6911	6920	6928	6937	6946	6955	6964	6972	6981	1	2	3	4	4	5	6	7	8
50	6990	6998	7007	7016	7024	7033	7042	7050	7059	7067	1	2	3	3	4	5	6	7	8
51	7076	7084	7093	7101	7110	7118	7126	7135	7143	7152	1	2	3	3	4	5	6	7	8
52	7160	7168	7177	7185	7193	7202	7210	7218	7226	7235	1	2	2	3	4	5	6	7	7
53	7243	7251	7259	7267	7275	7284	7292	7300	7308	7316	1	2	2	3	4	5	6	6	7
54	7324	7332	7340	7348	7356	7364	7372	7380	7388	7396	1	2	2	3	4	5	6	6	7

TABLE OF LOGARITHMS.—*Continued.*

	0	1	2	3	4	5	6	7	8	9	1	2	3	4	5	6	7	8	9
55	7404	7412	7419	7427	7435	7443	7451	7459	7466	7474	1	2	2	3	4	5	5	6	7
56	7482	7490	7497	7505	7513	7520	7528	7536	7543	7551	1	2	2	3	4	5	5	6	7
57	7559	7566	7574	7582	7589	7597	7604	7612	7619	7627	1	2	2	3	4	5	5	6	7
58	7634	7642	7649	7657	7664	7672	7679	7686	7694	7701	1	1	2	3	4	4	5	6	7
59	7709	7716	7723	7731	7738	7745	7752	7760	7767	7774	1	1	2	3	4	4	5	6	7
60	7782	7789	7796	7803	7810	7818	7825	7832	7839	7846	1	1	2	3	4	4	5	6	6
61	7853	7860	7868	7875	7882	7889	7896	7903	7910	7917	1	1	2	3	4	4	5	6	6
62	7924	7931	7938	7945	7952	7959	7966	7973	7980	7987	1	1	2	3	3	4	5	6	6
63	7993	8000	8007	8014	8021	8028	8035	8041	8048	8055	1	1	2	3	3	4	5	5	6
64	8062	8069	8075	8082	8089	8096	8102	8109	8116	8122	1	1	2	3	3	4	5	5	6
65	8129	8136	8142	8149	8156	8162	8169	8176	8182	8189	1	1	2	3	3	4	5	5	6
66	8195	8202	8209	8215	8222	8228	8235	8241	8248	8254	1	1	2	3	3	4	5	5	6
67	8261	8267	8274	8280	8287	8293	8299	8306	8312	8319	1	1	2	3	3	4	5	5	6
68	8325	8331	8338	8344	8351	8357	8363	8370	8376	8382	1	1	2	3	3	4	4	5	6
69	8388	8395	8401	8407	8414	8420	8426	8432	8439	8445	1	1	2	2	3	4	4	5	6
70	8451	8457	8463	8470	8476	8482	8488	8494	8500	8506	1	1	2	2	3	4	4	5	6
71	8513	8519	8525	8531	8537	8543	8549	8555	8561	8567	1	1	2	2	3	4	4	5	5
72	8573	8579	8585	8591	8597	8603	8609	8615	8621	8627	1	1	2	2	3	4	4	5	5
73	8633	8639	8645	8651	8657	8663	8669	8675	8681	8686	1	1	2	2	3	4	4	5	5
74	8692	8698	8704	8710	8716	8722	8727	8733	8739	8745	1	1	2	2	3	4	4	5	5
75	8751	8756	8762	8768	8774	8779	8785	8791	8797	8802	1	1	2	2	3	3	4	5	5
76	8808	8814	8820	8825	8831	8837	8842	8848	8854	8859	1	1	2	2	3	3	4	5	5
77	8865	8871	8876	8882	8887	8893	8899	8904	8910	8915	1	1	2	2	3	3	4	4	5
78	8921	8927	8932	8938	8943	8949	8954	8960	8965	8971	1	1	2	2	3	3	4	4	5
79	8976	8982	8987	8993	8998	9004	9009	9015	9020	9025	1	1	2	2	3	3	4	4	5
80	9031	9036	9042	9047	9053	9058	9063	9069	9074	9079	1	1	2	2	3	3	4	4	5
81	9085	9090	9096	9101	9106	9112	9117	9122	9128	9133	1	1	2	2	3	3	4	4	5
82	9138	9143	9149	9154	9159	9165	9170	9175	9180	9186	1	1	2	2	3	3	4	4	5
83	9191	9196	9201	9206	9212	9217	9222	9227	9232	9238	1	1	2	2	3	3	4	4	5
84	9243	9248	9253	9258	9263	9269	9274	9279	9284	9289	1	1	2	2	3	3	4	4	5
85	9294	9299	9304	9309	9315	9320	9325	9330	9335	9340	1	1	2	2	3	3	4	4	5
86	9345	9350	9355	9360	9365	9370	9375	9380	9385	9390	1	1	2	2	3	3	4	4	5
87	9395	9400	9405	9410	9415	9420	9425	9430	9435	9440	0	1	1	2	2	3	3	4	4
88	9445	9450	9455	9460	9465	9469	9474	9479	9484	9489	0	1	1	2	2	3	3	4	4
89	9494	9499	9504	9509	9513	9518	9523	9528	9533	9538	0	1	1	2	2	3	3	4	4
90	9542	9547	9552	9557	9562	9566	9571	9576	9581	9586	0	1	1	2	2	3	3	4	4
91	9590	9595	9600	9605	9609	9614	9619	9624	9628	9633	0	1	1	2	2	3	3	4	4
92	9638	9643	9647	9652	9657	9661	9666	9671	9675	9680	0	1	1	2	2	3	3	4	4
93	9685	9689	9694	9699	9703	9708	9713	9717	9722	9727	0	1	1	2	2	3	3	4	4
94	9731	9736	9741	9745	9750	9754	9759	9763	9768	9773	0	1	1	2	2	3	3	4	4
95	9777	9782	9786	9791	9795	9800	9805	9809	9814	9818	0	1	1	2	2	3	3	4	4
96	9823	9827	9832	9836	9841	9845	9850	9854	9859	9863	0	1	1	2	2	3	3	4	4
97	9868	9872	9877	9881	9886	9890	9894	9899	9903	9908	0	1	1	2	2	3	3	4	4
98	9912	9917	9921	9926	9930	9934	9939	9943	9948	9952	0	1	1	2	2	3	3	4	4
99	9956	9961	9965	9969	9974	9978	9983	9987	9991	9996	0	1	1	2	2	3	3	3	4

TABLE OF ANTILOGARITHMS.

	0	1	2	3	4	5	6	7	8	9	1	2	3	4	5	6	7	8	9
·00	1000	1002	1005	1007	1009	1012	1014	1016	1019	1021	0	0	1	1	1	1	2	2	2
·01	1023	1026	1028	1030	1033	1035	1038	1040	1042	1045	0	0	1	1	1	1	2	2	2
·02	1047	1050	1052	1054	1057	1059	1062	1064	1067	1069	0	0	1	1	1	1	2	2	2
·03	1072	1074	1076	1079	1081	1084	1086	1089	1091	1094	0	0	1	1	1	1	2	2	2
·04	1096	1099	1102	1104	1107	1109	1112	1114	1117	1119	0	1	1	1	1	2	2	2	2
·05	1122	1125	1127	1130	1132	1135	1138	1140	1143	1146	0	1	1	1	1	2	2	2	2
·06	1148	1151	1153	1156	1159	1161	1164	1167	1169	1172	0	1	1	1	1	2	2	2	2
·07	1175	1178	1180	1183	1186	1189	1191	1194	1197	1199	0	1	1	1	1	2	2	2	2
·08	1202	1205	1208	1211	1213	1216	1219	1222	1225	1227	0	1	1	1	1	2	2	2	3
·09	1230	1233	1236	1239	1242	1245	1247	1250	1253	1256	0	1	1	1	1	2	2	2	3
·10	1259	1262	1265	1268	1271	1274	1276	1279	1282	1285	0	1	1	1	1	2	2	2	3
·11	1288	1291	1294	1297	1300	1303	1306	1309	1312	1315	0	1	1	1	2	2	2	2	3
·12	1318	1321	1324	1327	1330	1334	1337	1340	1343	1346	0	1	1	1	2	2	2	2	3
·13	1349	1352	1355	1358	1361	1365	1368	1371	1374	1377	0	1	1	1	2	2	2	3	3
·14	1380	1384	1387	1390	1393	1396	1400	1403	1406	1409	0	1	1	1	2	2	2	3	3
·15	1413	1416	1419	1422	1426	1429	1432	1435	1439	1442	0	1	1	1	2	2	2	3	3
·16	1445	1449	1452	1455	1459	1462	1466	1469	1472	1476	0	1	1	1	2	2	2	3	3
·17	1479	1483	1486	1489	1493	1496	1500	1503	1507	1510	0	1	1	1	2	2	2	3	3
·18	1514	1517	1521	1524	1528	1531	1535	1538	1542	1545	0	1	1	1	2	2	2	3	3
19	1549	1552	1556	1560	1563	1567	1570	1574	1578	1581	0	1	1	1	2	2	3	3	3
·20	1585	1589	1592	1596	1600	1603	1607	1611	1614	1618	0	1	1	1	2	2	3	3	3
·21	1622	1626	1629	1633	1637	1641	1644	1648	1652	1656	0	1	1	2	2	2	3	3	3
·22	1660	1663	1667	1671	1675	1679	1683	1687	1690	1694	0	1	1	2	2	2	3	3	3
·23	1698	1702	1706	1710	1714	1718	1722	1726	1730	1734	0	1	1	2	2	2	3	3	4
·24	1738	1742	1746	1750	1754	1758	1762	1766	1770	1774	0	1	1	2	2	2	3	3	4
·25	1778	1782	1786	1791	1795	1799	1803	1807	1811	1816	0	1	1	2	2	2	3	3	4
·26	1820	1824	1828	1832	1837	1841	1845	1849	1854	1858	0	1	1	2	2	3	3	3	4
·27	1862	1866	1871	1875	1879	1884	1888	1892	1897	1901	0	1	1	2	2	3	3	3	4
·28	1905	1910	1914	1919	1923	1928	1932	1936	1941	1945	0	1	1	2	2	3	3	4	4
·29	1950	1954	1959	1963	1968	1972	1977	1982	1986	1991	0	1	1	2	2	3	3	4	4
·30	1995	2000	2004	2009	2014	2018	2023	2028	2032	2037	0	1	1	2	2	3	3	4	4
·31	2042	2046	2051	2056	2061	2065	2070	2075	2080	2084	0	1	1	2	2	3	3	4	4
·32	2089	2094	2099	2104	2109	2113	2118	2123	2128	2133	0	1	1	2	2	3	3	4	4
·33	2138	2143	2148	2153	2158	2163	2168	2173	2178	2183	0	1	1	2	2	3	3	4	4
·34	2188	2193	2198	2203	2208	2213	2218	2223	2228	2234	1	1	2	2	3	3	4	4	5
·35	2239	2244	2249	2254	2259	2265	2270	2275	2280	2286	1	1	2	2	3	3	4	4	5
·36	2291	2296	2301	2307	2312	2317	2323	2328	2333	2339	1	1	2	2	3	3	4	4	5
·37	2344	2350	2355	2360	2366	2371	2377	2382	2388	2393	1	1	2	2	3	3	4	4	5
·38	2399	2404	2410	2415	2421	2427	2432	2438	2443	2449	1	1	2	2	3	3	4	4	5
·39	2455	2460	2466	2472	2477	2483	2489	2495	2500	2506	1	1	2	2	3	3	4	5	5
·40	2512	2518	2523	2529	2535	2541	2547	2553	2559	2564	1	1	2	2	3	4	4	5	5
·41	2570	2576	2582	2588	2594	2600	2606	2612	2618	2624	1	1	2	2	3	4	4	5	5
·42	2630	2636	2642	2649	2655	2661	2667	2673	2679	2685	1	1	2	2	3	4	4	5	6
·43	2692	2698	2704	2710	2716	2723	2729	2735	2742	2748	1	1	2	3	3	4	4	5	6
·44	2754	2761	2767	2773	2780	2786	2793	2799	2805	2812	1	1	2	3	3	4	4	5	6
·45	2818	2825	2831	2838	2844	2851	2858	2864	2871	2877	1	1	2	3	3	4	5	5	6
·46	2884	2891	2897	2904	2911	2917	2924	2931	2938	2944	1	1	2	3	3	4	5	5	6
·47	2951	2958	2965	2972	2979	2985	2992	2999	3006	3013	1	1	2	3	3	4	5	5	6
·48	3020	3027	3034	3041	3048	3055	3062	3069	3076	3083	1	1	2	3	4	4	5	6	6
·49	3090	3097	3105	3112	3119	3126	3133	3141	3148	3155	1	1	2	3	4	4	5	6	6

TABLE OF ANTILOGARITHMS.—*Continued.*

	0	1	2	3	4	5	6	7	8	9	1	2	3	4	5	6	7	8	9
·50	3162	3170	8177	3184	3192	3199	3206	3214	3221	3228	1	1	2	3	4	4	5	6	7
·51	3236	3243	3251	3258	3266	3273	3281	3289	3296	3304	1	2	2	3	4	5	5	6	7
·52	3311	3319	3327	3334	3342	3350	3357	3365	3373	3381	1	2	2	3	4	5	5	6	7
·53	3388	3396	8404	3412	3420	3428	3436	3443	3451	3459	1	2	2	3	4	5	6	6	7
·54	3467	3475	3483	3491	3499	3508	3516	8524	3532	3540	1	2	2	3	4	5	6	6	7
·55	3548	3556	3565	3573	3581	3589	3597	3606	3614	3622	1	2	2	3	4	5	6	7	7
·56	3631	3639	3648	3656	3664	3673	3681	3690	3698	3707	1	2	3	3	4	5	6	7	8
·57	3715	3724	3733	3741	3750	3758	3767	3776	3784	3793	1	2	3	3	4	5	6	7	8
·58	3802	3811	3819	3828	3837	3846	3855	3864	3873	3882	1	2	3	4	4	5	6	7	8
·59	3890	3899	3908	3917	3926	3936	3945	3954	3963	3972	1	2	3	4	5	5	6	7	8
·60	3981	3990	3999	4009	4018	4027	4036	4046	4055	4064	1	2	3	4	5	6	6	7	8
·61	4074	4083	4093	4102	4111	4121	4130	4140	4150	4159	1	2	3	4	5	6	7	8	9
·62	4169	4178	4188	4198	4207	4217	4227	4236	4246	4256	1	2	3	4	5	6	7	8	9
·63	4266	4276	4285	4295	4305	4315	4325	4335	4345	4355	1	2	3	4	5	6	7	8	9
·64	4365	4375	4385	4395	4406	4416	4426	4436	4446	4457	1	2	3	4	5	6	7	8	9
·65	4467	4477	4487	4498	4508	4519	4529	4539	4550	4560	1	2	3	4	5	6	7	8	9
·66	4571	4581	4592	4603	4613	4624	4634	4645	4656	4667	1	2	3	4	5	6	7	9	10
·67	4677	4688	4699	4710	4721	4732	4742	4753	4764	4775	1	2	3	4	5	7	8	9	10
·68	4786	4797	4808	4819	4831	4842	4853	4864	4875	4887	1	2	3	4	6	7	8	9	10
·69	4898	4909	4920	4932	4943	4955	4966	4977	4989	5000	1	2	3	5	6	7	8	9	10
·70	5012	5023	5035	5047	5058	5070	5082	5093	5105	5117	1	2	4	5	6	7	8	9	11
·71	5129	5140	5152	5164	5176	5188	5200	5212	5224	5236	1	2	4	5	6	7	8	10	11
·72	5248	5260	5272	5284	5297	5309	5321	5333	5346	5358	1	2	4	5	6	7	9	10	11
·73	5370	5383	5395	5408	5420	5433	5445	5458	5470	5483	1	3	4	5	6	8	9	10	11
·74	5495	5508	5521	5534	5546	5559	5572	5585	5598	5610	1	3	4	5	6	8	9	10	12
·75	5623	5636	5649	5662	5675	5689	5702	5715	5728	5741	1	3	4	5	7	8	9	10	12
·76	5754	5768	5781	5794	5808	5821	5834	5848	5861	5875	1	3	4	5	7	8	9	11	12
·77	5888	5902	5916	5929	5943	5957	5970	5984	5998	6012	1	3	4	5	7	8	10	11	12
·78	6026	6039	6053	6067	6081	6095	6109	6124	6138	6152	1	3	4	6	7	8	10	11	13
·79	6166	6180	6194	6209	6223	6237	6252	6266	6281	6295	1	3	4	6	7	9	10	11	13
·80	6310	6324	6339	6353	6368	6383	6397	6412	6427	6442	1	3	4	6	7	9	10	12	13
·81	6457	6471	6486	6501	6516	6531	6546	6561	6577	6592	2	3	5	6	8	9	11	12	14
·82	6607	6622	6637	6653	6668	6683	6699	6714	6730	6745	2	3	5	6	8	9	11	12	14
·83	6761	6776	6792	6808	6823	6839	6855	6871	6887	6902	2	3	5	6	8	9	11	13	14
·84	6918	6934	6950	6966	6982	6998	7015	7031	7047	7063	2	3	5	6	8	10	11	13	15
·85	7079	7096	7112	7129	7145	7161	7178	7194	7211	7228	2	3	5	7	8	10	12	13	15
·86	7244	7261	7278	7295	7311	7328	7345	7362	7379	7396	2	3	5	7	8	10	12	13	15
·87	7413	7430	7447	7464	7482	7499	7516	7534	7551	7568	2	3	5	7	9	10	12	14	16
·88	7586	7603	7621	7638	7656	7674	7691	7709	7727	7745	2	4	5	7	9	11	12	14	16
·89	7762	7780	7798	7816	7834	7852	7870	7889	7907	7925	2	4	5	7	9	11	13	14	16
·90	7943	7962	7980	7998	8017	8035	8054	8072	8891	8110	2	4	6	7	9	11	13	15	17
·91	8128	8147	8166	8185	8204	8222	8241	8260	8279	8299	2	4	6	8	9	11	13	15	17
·92	8318	8337	8356	8375	8395	8414	8433	8453	8472	8492	2	4	6	8	10	12	14	15	17
·93	8511	8531	8551	8570	8590	8610	8630	8650	8670	8690	2	4	6	8	10	12	14	16	18
·94	8710	8730	8750	8770	8790	8810	8831	8851	8872	8892	2	4	6	8	10	12	14	16	18
·95	8913	8933	8954	8974	8995	9016	9036	9057	9078	9099	2	4	6	8	10	12	15	17	19
·96	9120	9141	9162	9183	9204	9226	9247	9268	9290	9311	2	4	6	8	11	13	15	17	19
·97	9333	9354	9376	9397	9419	9441	9462	9484	9506	9528	2	4	7	9	11	13	15	17	20
·98	9550	9572	9594	9616	9638	9661	9683	9705	9727	9750	2	4	7	9	11	13	16	18	20
·99	9772	9795	9817	9840	9863	9886	9908	9931	9954	9977	2	5	7	9	11	14	16	18	20

TABLE OF FUNCTIONS OF ANGLES.

Angle.		Chord.	Sine.	Tangent.	Co-tangent.	Cosine.			
Degrees.	Radians.								
0°	0	000	0	0	∞	1	1·414	1·5708	90°
1	·0175	·017	·0175	·0175	57·2900	·9998	1·402	1·5533	89
2	·0349	·035	·0349	·0349	28·6363	·9994	1·389	1·5359	88
3	·0524	·052	·0523	·0524	19·0811	·9986	1·377	1·5184	87
4	·0698	·070	·0698	·0699	14·3007	·9976	1·364	1·5010	86
5	·0873	·087	·0872	·0875	11·4301	·9962	1·351	1·4835	85
6	·1047	·105	·1045	·1051	9·5144	·9945	1·338	1·4661	84
7	·1222	·122	·1219	·1228	8·1443	·9925	1·325	1·4486	83
8	·1396	·140	·1392	·1405	7·1154	·9903	1·312	1·4312	82
9	·1571	·157	·1564	·1584	6·3138	·9877	1·299	1·4137	81
10	·1745	·174	·1736	·1763	5·6713	·9848	1·286	1·3963	80
11	·1929	·192	·1908	·1944	5·1446	·9816	1·272	1·3788	79
12	·2094	·209	·2079	·2126	4·7046	·9781	1·259	1·3614	78
13	·2269	·226	·2250	·2309	4·3315	·9744	1·245	1·3439	77
14	·2443	·244	·2419	·2493	4·0108	·9703	1·231	1·3265	76
15	·2618	·261	·2588	·2679	3·7321	·9659	1·218	1·3090	75
16	·2793	·278	·2756	·2867	3·4874	·9613	1·204	1·2915	74
17	·2967	·296	·2924	·3057	3·2709	·9563	1·190	1·2741	73
18	·3142	·313	·3090	·3249	3·0777	·9511	1·176	1·2566	72
19	·3316	·330	·3256	·3443	2·9042	·9455	1·161	1·2392	71
20	·3491	·347	·3420	·3640	2·7475	·9397	1·147	1·2217	70
21	·3665	·364	·3584	·3839	2·6051	·9336	1·133	1·2043	69
22	·3840	·382	·3746	·4040	2·4751	·9272	1·118	1·1868	68
23	·4014	·399	·3907	·4245	2·3559	·9205	1·104	1·1694	67
24	·4189	·416	·4067	·4452	2·2460	·9135	1·089	1·1519	66
25	·4363	·433	·4226	·4663	2·1445	·9063	1·075	1·1345	65
26	·4538	·450	·4384	·4877	2·0503	·8988	1·060	1·1170	64
27	·4712	·467	·4540	·5095	1·9626	·8910	1·045	1·0996	63
28	·4887	·484	·4695	·5317	1·8807	·8829	1·030	1·0821	62
29	·5061	·501	·4848	·5543	1·8040	·8746	1·015	1·0647	61
30	·5236	·518	·5000	·5774	1·7321	·8660	1·000	1·0472	60
31	·5411	·534	·5150	·6009	1·6643	·8572	·985	1·0297	59
32	·5585	·551	·5299	·6249	1·6003	·8480	·970	1·0123	58
33	·5760	·568	·5446	·6494	1·5399	·8387	·954	·9948	57
34	·5934	·585	·5592	·6745	1·4826	·8290	·939	·9774	56
35	·6109	·601	·5736	·7002	1·4281	·8192	·923	·9599	55
36	·6283	·618	·5878	·7265	1·3764	·8090	·908	·9425	54
37	·6458	·635	·6018	·7536	1·3270	·7986	·892	·9250	53
38	·6632	·651	·6157	·7813	1·2799	·7880	·877	·9076	52
39	·6807	·668	·6293	·8098	1·2349	·7771	·861	·8901	51
40	·6981	·684	·6428	·8391	1·1918	·7660	·845	·8727	50
41	·7156	·700	·6561	·8693	1·1504	·7547	·829	·8552	49
42	·7330	·717	·6691	·9004	1·1106	·7431	·813	·8378	48
43	·7505	·733	·6820	·9325	1·0724	·7314	·797	·8203	47
44	·7679	·749	·6947	·9657	1·0355	·7193	·781	·8029	46
45°	·7854	·765	·7071	1·0000	1·0000	·7071	·765	·7854	45°
			Cosine.	Co-tangent.	Tangent.	Sine.	Chord.	Radians.	Degrees.
								Angle.	

The Institution of Civil Engineers.

EXTRACTS FROM RULES AND SYLLABUS OF EXAMINATIONS FOR

ELECTION OF ASSOCIATE MEMBERS.

PART II.*—*Scientific Knowledge.*

SECTION A.

1. Mechanics (one Paper, *time allowed*, 3 *hours*).

2. Strength and Elasticity of Materials (one Paper, *time allowed*, 3 *hours*).

3. *Either* (*a*) **Theory of Structures,**

or (*b*) **Theory of Electricity and Magnetism** (one Paper, *time allowed*, 3 *hours*).

SECTION B.

Two of the following nine subjects—not more than one from any group (one Paper in each subject taken, *time allowed*, 3 *hours for each Paper*):—

Group i.	*Group* ii.	*Group* iii.
Geodesy.	Hydraulics.	Geology and Mineralogy.
Theory of Heat Engines.	Theory of Machines.	Stability and Resistance of Ships.
Thermo- and Electro-Chemistry.	Metallurgy.	Applications of Electricity.

* Candidates may offer themselves for examination in Sections A and B of Part II. together; or they may enter for Section A alone, and, if successful, may take Section B at a subsequent examination. In the latter case, however, such candidates will not be allowed to present themselves for examination in Section B unless or until they are actually occupied in work as pupils or assistants to practising Engineers. The Council may permit Candidates who have attempted the whole of Part II. at one examination, and have failed in Section B only, to complete their qualification by passing in that section at a subsequent examination, subject to their being then occupied as above stated.

Mathematics.—The standard of Mathematics required for the Papers in Part II. of the examination is that of the mathematical portion of the Examination for the Admission of Students, though questions may be set involving the use of higher Mathematics.

The range of the examinations in the several subjects, in each of which a choice of questions will be allowed, is indicated generally hereunder:—

SECTION A.

1. Mechanics:—

Statics.—Forces acting on a rigid body; moments of forces, composition, and resolution of forces; couples, conditions of equilibrium, with application to loaded structures. The foregoing subjects to be treated both graphically and by aid of algebra and geometry.

Hydrostatics.—Pressure at any point in a gravitating liquid; centre of pressure on immersed plane areas; specific gravity.

Kinematics of Plane Motion.—Velocity and acceleration of a point; instantaneous centre of a moving body.

Kinetics of Plane Motion.—Force, mass, momentum, moment of momentum, work, energy, their relation and their measure; equations of motion of a particle; rectilinear motion under the action of gravity; falling bodies and motion on an inclined plane; motion in a circle; centres of mass and moments of inertia; rotation of a rigid body about a fixed axis; conservation of energy.

2. Strength and Elasticity of Materials:—

Physical properties and elastic constants of cast iron, wrought iron, steel, timber, stone, and cement; relation of stress and strain, limit of elasticity, yield-point, Young's modulus; coefficient of rigidity; extension and lateral contraction; resistance within the elastic limit in tension, compression, shear and torsion; thin shells; strength and deflection in simple cases of bending; beams of uniform resistance; suddenly applied loads.

Ultimate strength with different modes of loading; plasticity, working stress; phenomena in an ordinary tensile test; stress-strain diagram; elongation and contraction of area; effects of hardening, tempering and annealing; fatigue of metals; measurement of hardness.

Forms and arrangements of testing machines for tension, compression, torsion, and bending tests; instruments for measuring extension, compression, and twist; forms of test pieces and arrangements for holding them; influence of form on strength and elongation; methods of ordinary commercial testing; percentage of elongation and contraction of area; test conditions in specifications for cast iron, mild steel, and cement.

3. (*a*) Theory of Structures:—

Graphic and analytic methods for the calculation of bending moments and of shearing forces, and of the stresses in individual members of framework structures loaded at the joints; plate and box girders; incomplete and redundant frames; stresses suddenly applied, and effects of impact;

buckling of struts; effect of different end fastenings on their resistance; combined strains; calculations connected with statically indeterminate problems, as beams supported at three points, &c.; travelling loads; riveted and pin-joint girders; rigid and hinged arches; strains due to weight of structures; theory of earth-pressure and of foundations; stability of masonry and brickwork structures.

3. (*b*) Theory of Electricity and Magnetism:—

Electrical and magnetic laws, units, standards, and measurements; electrical and magnetic measuring instruments; the theory of the generation, storage, transformation, and distribution of electrical energy; continuous and alternating currents; arc and incandescent lamps; secondary cells.

SECTION B.

Group i. Theory of Heat Engines:—

Thermodynamic laws; internal and external work; graphical representation of changes in the condition of a fluid; theory of heat engines working with a perfect gas; air- and gas-engine cycles; reversibility, conditions necessary for maximum possible efficiency in any cycle; properties of steam; the Carnot and Clausius cycles; entropy and entropy-temperature diagrams, and their application in the study of heat engines; actual heat engine cycles and their thermodynamic losses; effects of clearance and throttling; initial condensation; testing of heat engines, and the apparatus employed; performances of typical engines of different classes; efficiency.

Group ii. Hydraulics:—

The laws of the flow of water by orifices, notches, and weirs; laws of fluid friction; steady flow in pipes or channels of uniform section; resistance of valves and bends; general phenomena of flow in rivers; methods of determining the discharge of streams; tidal action; generation and effect of waves; impulse and reaction of jets of water; transmission of energy by fluids; principles of machines acting by weight, pressure, and kinetic energy of water; theory and structure of turbines and pumps.

Theory of Machines:—

Kinematics of machines; inversion of kinematic chains; virtual centres; belt, rope, chain, toothed and screw gearing; velocity, acceleration and effort diagrams; inertia of reciprocating parts; elementary cases of balancing; governors and flywheels; friction and efficiency; strength and proportions of machine parts in simple cases.

Group iii. Applications of Electricity:—

Theory and design of continuous- and alternating-current generators and motors, synchronous and induction motors and static transformers; design

of generating- and sub-stations and the principal plant required in them; the principal systems of distributing electrical energy, including the arrangement of mains and feeders; estimation of losses and of efficiency; principal systems of electric traction; construction and efficiency of the principal types of electric lamps.

☞ Candidates should see, that all their "Forms" are *duly completed* and *passed* by the Council of the Institution of Civil Engineers, Great George Street, Westminster, S.W., *before* 1st January for the February Examination, and *before* the 1st September for the October Examination.

Examinations Abroad.—The papers of the *October* Examination *only* will be placed before accepted Candidates in India and the Colonies. To enable the Secretary to make arrangements for the Application Forms and Fees, &c., of these Candidates, their Forms, &c., *must* be in the Secretary's hands, *before* the 1st June preceding the October Examinations.

THE INSTITUTION OF CIVIL ENGINEERS' EXAMINATION, OCTOBER, 1913.

ELECTION OF ASSOCIATE MEMBERS.

THEORY OF HEAT ENGINES.

Not more than EIGHT *questions to be attempted by any Candidate.*

1. State briefly the advantages of using multi-stage air-compressors. Air is compressed adiabatically from a pressure of 15 lbs. per square inch absolute to 90 lbs. per square inch absolute. Find the final temperature of the air if the initial temperature is 60° F. (Assume $y = 1{\cdot}4$.)

2. The following results were obtained from the test of a gas engine working on the Otto cycle:—

Duration of test in minutes,	90
Indicated horse-power,	150
Total gas used in cubic feet,	3,825
Calorific value of gas per cubic foot, B.Th.U.,	550

Clearance volume 15 per cent. of piston displacement.

Find the thermal efficiency and the efficiency-ratio of the engine.

3. Sketch and describe some system of forced draught for steam boilers, and state briefly the advantages of forced draught, and its effects upon the thermal efficiency of boilers.

4. Steam enters the nozzle of a De Laval turbine and expands to the condenser pressure. The theoretical heat-drop is 230 B.Th.U. per pound, but 10 per cent. of the energy is lost in friction. Draw the velocity-diagram of the steam passing through the turbine if the relative velocity at exit is 85 per cent. of the inlet velocity. Find the efficiency of the nozzle and vanes, assuming the steam enters the vanes without shock and that the inlet and outlet angles of the vanes are equal. The peripheral velocity of the wheel is 1,200 feet per second. The nozzles are inclined at an angle of 20° to the plane of the wheel.

5. The following results were obtained from a test of a steam engine controlled by a throttling governor:—

Indicated Horse-Power.	Lbs. of Steam per Hour.
103	1,615
304	4,630

Assuming Willans's law, find an equation connecting the horse-power and the steam used; also find the steam consumption per hour at 220 I.H.P.

6. Sketch the temperature-entropy diagram for ammonia, and show on it the refrigerating cycle for wet compression. How is the coefficient of performance determined?

7. Find the work done per pound of steam by a steam engine working on the Rankine cycle between 362° F. and 152° F. How many pounds of steam are required per horse-power, given the following Table?

Temperature. ° F.	Entropy of 1 Lb. of Water.	Total Entropy of 1 Lb. of Steam.
362	0·519	1·566
152	0·218	1·863

8. Find the dryness of the steam after cut-off as three-quarters of the stroke from the following particulars of an engine-trial, assuming no leakage:

Condensed steam per hour in pounds,	4,608
Revolutions per minnte,	120
Volume of cylinder, cubic feet,	3·6
Clearance per cent.,	5
Pressure of steam in pounds per square inch as $\frac{3}{4}$ stroke,	41·8
Volume in cubic feet of 1 lb. of steam at 41·8 lbs. pressure,	10·05
Pressure of steam in pounds per square inch at 0·84 of the return stroke and commencement of compression,	17·2
Volume in cubic feet of 1 lb. of steam at 17·2 lbs. per square inch,	23·14

9. Describe with a sketch (i) some method of measuring high temperature in heat engines; or (ii) some method of measuring the fluctuation of speed of rotation of an engine.

10. Describe the ideal Carnot cycle by means of a $p\,v$ diagram, and by means of a temperature-entropy diagram. A perfect engine working on the Carnot cycle receives 5,000 B.Th.U. per minute at 2,000° F.; the heat is rejected at 500° F. Find the horse-power and the efficiency of the engine.

11. Explain with a sketch the working of a suction gas producer. What is the object of admitting vapour with the air? Describe any method of regulating the vapour supply.

12. Steam passes through a throttling calorimeter where it is reduced in pressure from 120 lbs. per square inch (temperature 341° F.) to 15 lbs. per square inch. The temperature after expansion is 230° F. The temperature of steam at 15 lbs. per square inch is normally 213° F. Find the original dryness of the steam. The latent heat of 1 lb. of dry steam is approximately $1{,}114 - 0{\cdot}7\,t$ thermal units, where t is the temperature of the steam in degrees Fahrenheit. The specific heat of superheated steam may be taken as 0·5.

February, 1914.

THEORY OF HEAT ENGINES.

Not more than EIGHT *questions to be attempted by any Candidate.*

1. Find the diameter of the high- and low-pressure cylinders of a compound engine to develop 120 indicated horse-power with a piston speed of 600 feet per minute. Ratio of cylinder volumes 1 : 3·25. Admission pressure, 115 lbs. per square inch absolute; condenser pressure, 3 lbs. per square inch absolute; cut-off in the high-pressure cylinder, 0·5. Assume a diagram factor of 0·7.

2. Sketch and describe some form of carburettor for a petrol engine. State some of the difficulties to be overcome in the design of carburettors for motor work.

3. Air is drawn into a compressor at atmospheric pressure and compressed to a pressure of five atmospheres. Find the horse-power required to compress and deliver 1,000 cubic feet of free air, assuming (*a*) isothermal compression, (*b*) adiabatic compression. ($y = 1{\cdot}4$.)

4. The following results were obtained from the test of a steam engine :—

Mean pressure on the piston in pounds per square inch,	40
Revolutions per minute (double-acting),	180
Net load on brake in pounds,	400
Radius of brake load in feet,	5
Steam condensed per hour in pounds,	1,256
Diameter of cylinder in inches,	12
Length of stroke in feet,	1·5

Find the indicated horse-power, brake horse-power, mechanical efficiency, and steam per horse-power-hour.

5. Use the following Table to draw a temperature-entropy diagram, and from it find the work done per pound of dry steam by a perfect engine working on the Rankine cycle between 150 lbs. per square inch and 16 lbs. per square inch absolute pressures. Also determine the dryness of the steam after expansion.

Pressure. Lbs. per Square Inch.	Temperature. ° F.	Entropy of 1 Lb. of Water.	Total Entropy of 1 Lb. of Steam.
150	359	0·514	1·569
16	216	0·319	1·749

6. Make an outline sketch of either a link-motion, or of some form of radial valve-gear. Explain how you would determine the angle of advance and eccentricity of the equivalent eccentric for a given position of the gear.

7. State the chief items of cost in generating a unit of energy: (*a*) by steam-plant, (*b*) by gas-plant in a power station. What is the effect of the load-factor on these items, and how is the question of the type and dimensions of the plant affected by the load-factor?

8. The following results were obtained from tests of two separate boilers:—

	No. I.	No. II.
Water evaporated per pound of coal, lbs., .	8·7	9·2
Temperature of feed-water, ° F., . .	60	200
Temperature of saturated steam at boiler-pressure, ° F., ...	340	380
Degrees of superheat, F., ...	..	100
Dryness of steam, ...	0·98	..

Assuming the quality of the coal to be the same in both cases, determine which is the more efficient boiler. Latent heat of 1 lb. of dry steam = 1,114 − 0·7 t, where t is the temperature of the steam in ° F. The specific heat of superheated steam may be taken as 0·5.

9. Describe briefly the principle of action of De Laval, Rateau, Curtis, and Parsons steam turbines. Show by a diagram how the pressure and the velocity of the steam vary in passing through any one of these turbines.

10. Explain fully the reason of the efforts made to improve the quality of the vacuum in steam-turbine plants, and describe some form of improved condensing and air-pump plant used for this purpose

11. The volumetric analysis of the flue-gas of a boiler gave the following results:—CO_2, 10 per cent.; oxygen, 9·7 per cent.; nitrogen, 80·3 per cent. Find the weight of air supplied per pound of coal if the coal contained 82 per cent. of carbon, 5·3 per cent. of hydrogen, 4 per cent. of ash, and 8·7 per cent. of incombustible gaseous products.

12. The pressure and volume at several points in the compression of a gaseous mixture in a gas-engine cylinder is shown in the following Table:—

Pressure, . . .	20	45	80	130
Volume, . . .	4·73	2·52	1·62	1·10

Assume the curve can be represented by an equation of the form $P V_n = c$, and determine the value of n.

October, 1914.

THEORY OF HEAT ENGINES.

Not more than EIGHT *questions to be attempted by any Candidate*

1. State the second law of Thermodynamics and show how the growth of entropy in irreversible cycles is in conformity with this law.

2. Define the following terms: specific heat of a gas at constant volume; adiabatic expansion; latent heat of evaporation; total heat of a saturated vapour; heat of a liquid. State the relation existing between the last three terms for the same liquid.

3. What is the difference between the theoretical Otto and Diesel cycles? Which is theoretically the most efficient, assuming the same ratio of compression in both cases? Which is practically the most efficient, and why?

4. What is meant by a reversible cycle and by an irreversible cycle? Which portions of the cycle of an actual simple steam engine are irreversible?

5. Draw a Mollier heat-chart with the date given below (only the 200° F. superheat line, the saturation line, and the lines representing the given pressures need be drawn). Why are the pressure lines straight in the saturated field and curved in the superheated field? Assuming the initial condition of the steam to be 200 lbs. per square inch absolute pressure and 200° F. superheat, draw a line representing the Rankine cycle and a line giving 70 per cent. efficiency ratio; in both cases terminating at 2 lbs. absolute pressure.

	Pressure.	Total Heat.	Entropy.
	Lbs. per Sq. In. abs.	B.Th.U. per Lb.	
Superheat 200° F.,	200	1,308	1·663
	100	1,289	1·719
	25	1,256	1·833
	5	1,222	1·972
	1	1,206	2·053
Saturated,	200	1,198	1·546
	100	1,186	1·602
	25	1,160	1·714
	5	1,130	1·843
	1	1,115	1·918
0·8 dryness fraction,	200	1,030	1·346
	100	1,009	1·377
	25	970	1·444
	5	930	1·520
	1	911	1·570

6. What is meant by the term "missing quantity" in the case of a steam engine? Give your views as to the relative effect of valve leakage, cylinder walls, and moisture film on the missing quantity.

7. Describe and illustrate with hand-sketches a method of weighing the feed water in a boiler trial. What kind of corrections have to be made to the feed so measured to obtain the actual rate of feed of the boiler?

8. Describe one of the following kinds of brakes:—(*a*) Prony brake; (*b*) Froude water-brake. Obtain from first principles the formula for calculating the B.H.P.

9. The economy of a steam engine is generally stated as the number of pounds of steam required per I.H.P.-hour. Show that this statement

is incorrect and that the error is greater with superheated than with saturated steam.

10. In the Diesel type of oil engine a portion of the horse-power developed in the cylinders is required for working the air-compressor. Should this fact be taken into account when calculating the oil consumption per Indicated H.P., and if so in what way and to what extent?

11. One pound of air is compressed adiabatically to one-fourth of its original volume. Calculate the temperature reached, taking the initial temperature at 60° F. and $y = 1{\cdot}4$. How many B.Th.U. must be removed from the compressed air in order that it may be cooled to the original temperature, without changing its compressed volume? $C_v = 0{\cdot}17$.

12. The dryness of fraction of steam is ascertained to be 0·96 and the pressure is 170 lbs. per square inch absolute. Find the total heat of this steam given that the total heat of saturated steam at this pressure is 1,195·4 B.Th.U. per pound, and that the water heat is 340·7 B.Th.U. per pound. If this steam were expanded by throttling, show how to calculate the temperature when the steam is just saturated.

February, 1915.

THEORY OF HEAT ENGINES.

Not more than EIGHT *questions to be attempted by any Candidate*

1. Explain the statement that if the condition of a substance is changed along a reversible path the difference of entropy between the final and the initial stages is the summation of $\frac{d\,Q}{T}$. Show that the difference of entropy is greater than this if the path is irreversible.

2. Obtain the usual expression for the adiabatic expansion of a perfect gas.

3. Assuming constant specific heat, *sketch* the theoretical Otto cycle both on the $p\,v$ and on the $\theta\,\varphi$ diagram, and explain the meaning of each line. Superimpose in each case diagrams that might be obtained from an actual engine, stating the causes of the differences between the actual and the theoretical diagrams.

4. *Sketch* a θ-φ chart for steam and show by its means that the loss due to reducing the admission pressure by throttling is considerably less than that caused by an equal increase in back-pressure.

5. Describe shortly how you would carry out the test of a gas engine of, say, 20 B.H.P. using town's gas with the object of ascertaining the gas consumption per B.H.P.-hour.

6. Given the analysis of the fuel, of the flue gases, the temperature of the flue gases leaving the boiler and the temperature of the air in the boiler room, explain the method of calculating the heat carried away by the flue gases per pound of fuel.

7. The conditions under which a steam engine is working give an available heat fall of 318 B.Th.U. per lb. of steam. The result of a test gave a steam consumption of 10 lbs. per I.H.P.-hour. Calculate the efficiency ratio Does the result throw any doubt on the accuracy of the test of steam consumption ?

8. The thermal efficiency of a gas engine working with suction gas is 30 per cent. The efficiency of the producer is 80 per cent., and anthracite of 14,000 B.Th.U. per lb. is used, costing 28s. per ton. The overall thermal efficiency of a steam plant is 15 per cent. using coal of 12,500 B.Th.U. per lb., costing 12s. per ton. The brake efficiencies are 86 and 92 per cent. for the gas and the steam engine respectively. What is the cost of fuel in each case working at 100 B.H.P. for 3,000 hours, omitting standby losses ?

9. Explain the terms specific heat at constant volume, and specific heat at constant pressure. What views are now held as to the variation of these specific heats with temperature and with pressure in respect of the products of combustion of a gas engine ?

10. The ratio of the high-pressure to the low-pressure cylinder of a double-acting compound steam engine is 1 to 3. The average mean pressure of the high-pressure diagrams in 51 lbs. per square inch and that of the low-pressure diagrams 15 lbs. per square inch. The area of the low-pressure piston is 700 square inches, the stroke is 2 feet, and the speed 180 revolutions per minute. Calculate the I.H.P. If the B.H.P. measured is 450, what horse-power is required to overcome engine friction, and what is the brake efficiency ?

11. The explosive mixture in a gas-engine cylinder can produce 600 B.Th.U. per lb. At the beginning of compression the temperature is 250° F. Compression takes place adiabatically to one-seventh the original volume Explosion then occurs at constant volume. What theoretical temperature would be reached, assuming constant specific heats: $C_v = 0{\cdot}19$ and $C_p = 0{\cdot}26$?

12. Describe some form of throttling calorimeter for determining the dryness fraction of steam, explaining the principles of its action and stating the measurements to be taken.

October, 1915.

THEORY OF HEAT ENGINES.

Not more than EIGHT *questions to be attempted by any Candidate.*

1. What is meant, in thermodynamics, by the terms "reversible" and "irreversible" operations? Show that, within the same temperature limits, no engine can be more efficient than a reversible engine.

2. Prove the equation $V = w + J\frac{L}{\tau}\frac{d\tau}{dp}$, by which the volume per pound of dry saturated steam may be deduced from a knowledge of the latent

heat—temperature and the pressure—temperature curves and the density of water. Calculate the volume per pound of dry saturated steam at 200 lbs. per square inch absolute from the following data :—

Pressure (lbs. per square inch absolute), .	195	200	205
Temperature, ° F., ...	379·4	381·6	383·7

The latent heat as pressure 200 is 850·3 B.Th.U.

3. In respect to engine indicators of the ordinary type, enumerate the chief sources of error arising in connection with the attachment and adjustment of the instrument. State how the errors can be minimised.

4. Air, at a temperature of 80° F., is compressed from 15 to 90 lbs. per square inch absolute, and the curve of compression is $p\,v^{1\cdot2} = \text{constant}$. Find (1) the work done, and (2) the heat lost to the cylinder walls, per pound of air. The specific heats at constant pressure and constant volume are 0·2375 and 0·169 respectively.

5. In a surface condenser the tubes were $\frac{1}{10}$ inch thick, and the thermal conductivity of the material was such that 25 B.Th.U. were transmitted across a plate 1 inch thick per square foot per hour per degree difference of temperature of the two sides of the plate. Calculate the heat flow across the tubes if the outside and inside were at the temperatures of the steam (132° F.) and water (80° F.) respectively. Explain why the actual heat flow is smaller than that calculated.

6. In an ideal engine cycle with constant admission and back pressure and curves of expansion and compression $p\,v^n = \text{constant}$; show that the amount of clearance has no effect upon the efficiency, provided the expansion is carried to the lower and the compression to the higher pressure. What are the effects of clearance and compression in ordinary engines?

7. In an engine working on the Rankine-Clausius cycle, the steam being dry saturated at entry, the limits of temperature are 344° F. (latent heat 880 B.Th.U.) and 126° F. (latent heat 1,020 B.Th.U.); the thermal efficiency is 25 per cent. If the steam is superheated 200° F. at inlet, calculate the additional work done and the thermal efficiency. Explain why the addition of heat as superheat gives proportionately more work (1) in theory, (2) in practice.

8. A diverging nozzle is supplied with superheated steam at a given pressure, and expands the steam to a lower pressure at which the quality is given. Show how to calculate the diameter at the throat and at exit for a given discharge and how to determine the velocity of the steam at exit.

9. A triple-expansion marine engine is required to give 2,000 I.H.P., the piston speed being 720 feet per minute, and the cut-off being at 0·7 of the stroke in the H.P. cylinder. The steam-chest and back pressures are 205 and 2 lbs. per square inch respectively. Taking the diagram factor as 0·65 and the ratio of the L.P. to H.P. cylinder areas as 7·8, find suitable cylinder diameters.

10. Draw p-v and θ-φ diagrams for a refrigerating machine, using air, which has admission and exhaust at constant pressures; and adiabatic compression and expansion. If the temperatures at beginning and end of compression are 20° F. and 390° F., and the temperature at the beginning of expansion is 100° F., find the coefficient of performance.

11. Draw up a heat balance for the following test of a jacketed engine, expressing the results in percentage of heat supplied :—I.H.P., 200; admission pressure, 150 lbs. per square inch absolute; steam 3 per cent.

wet; cylinder feed, 3,550 lbs. per hour; jacket feed, 200 lbs. per hour; circulating water, 66,000 lbs. per hour, the rise of temperature being 49° F.; feed temperature, 120° F. At 150 lbs. pressure the sensible and latent heats are 331 and 869 B.Th.U. per pound.

12. In a gas engine working on the Otto cycle the clearance volume is one-third of the volume swept by the piston per stroke. Find the thermal efficiency of the corresponding ideal air cycle. Find also the mean pressure in the ideal cycle if the pressure at the beginning of compression is 15 lbs. per square inch and if the maximum pressure is 3 times the pressure at the end of compression. Take the ratio of specific heats as 1·4.

February, 1916.

THEORY OF HEAT ENGINES.

Not more than EIGHT *questions to be attempted by any Candidate.*

1. Show how an absolute scale of temperature can be defined, and state how air and mercury thermometers differ from such a scale. Using the absolute scale, find an expression for the efficiency of a perfect heat engine.

2. Steam 5 per cent. wet at pressure 105 lbs. per square inch absolute is throttled to 85 lbs. per square inch absolute and then expanded adiabatically to 40 lbs. per square inch absolute. Find the wetness after throttling and after expansion. At pressures 40, 85, and 105 the temperatures are 267°, 316°, and 331° F., and the latent heats are 935, 901, and 890 B.Th.U.

3. Describe with sketches *either*—(1) an engine indicator of the optical type; *or* (2) a shaft transmission dynamometer for a steam turbine.

4. Prove the relation that exists between the specific heats, at constant volume and constant pressure, of a gas. Calculate the difference between the two specific heats of air, having given that a pound of air has a volume of 13·1 cubic feet at a temperature of 60° F. and pressure 14·7 lbs. per square inch absolute.

5. Discuss the results of experiments upon the rate of transmission of heat to metal surfaces from gases and water flowing at high speeds. Indicate the bearing of such experiments on boiler and condenser design.

6. Taking the Rankine-Clausius cycle as the standard of comparison for the efficiency of steam engines, enumerate the sources of loss in the actual as compared with the ideal engine. The steam consumption of an engine is 13·5 lbs. per I.H.P.-hour, and the work done in the corresponding Rankine-Clausius cycle is 295 B.Th.U. per pound. Find the efficiency ratio.

7. In a simple impulse turbine of the de Laval type, the mean blade speed is 1,200 feet per second, the angle of the jet is 20°, and the blade angles are each 36°. If there is no loss by shock at entrance, find the velocity of the steam. For that velocity find the work done on the blades per pound per second and the ratio of the work done to the kinetic energy of the steam. Take the relative velocity at exit as 90 per cent. of the relative velocity at inlet.

8. Discuss the use of superheated steam in engines from the thermodynamic and practical aspects. Note some of the chief points to be considered in the design of engines for use with highly superheated steam.

9. Show how to combine the full load indicator cards for a triple-expansion engine, exhibiting them in relation to one saturation curve. Indicate the effect on the diagrams of throttling the steam supply.

10. Sketch a total heat-entropy chart for steam, showing curves of constant pressure, constant dryness, and constant superheat. Explain some of the uses of this chart in engine and turbine problems.

11. Exhibit on a θ-φ chart the cycle of a vapour compression refrigerator using ammonia, the compression being wet and the liquid being admitted through the expansion valve before cooling to the lower temperature. Show how to find the coefficient of performance. A plant produces 1 ton of ice per hour, each pound representing 170 B.Th.U. If the coefficient of performance is 60 per cent. of that of the corresponding ideal cycle, in which 550 B.Th.U. are absorbed for an expenditure of 74 B.Th.U. of work, find the horse-power necessary to drive the compressor.

12. Calculate the thermal efficiency of an ideal air engine working on the Diesel cycle. The compression and expansion curves are adiabatic ($y = 1{\cdot}4$), and the ratios of compression and expansion are 14 and 7 respectively. The temperature at the beginning of compression is 140° F.

February, 1917.

THEORY OF HEAT ENGINES.

Not more than EIGHT *questions to be attempted by any Candidate.*

1. One pound of air at 60° F. is drawn into an air compressor at 15 lbs. per square inch absolute pressure, compressed adiabatically to 90 lbs. per square inch and delivered to a receiver. Assuming the compressed air to be used in a motor without expansion at 60° F., find the ratio of the work done in the motor to the work expended in the compressor. Neglect losses.

2. Draw the ideal indicator diagram from the following data, and find the mean effective pressure. Admission pressure 80 lbs. per square inch by gauge; cut-off at 0·4 of stroke; release at 0·95 of stroke; compression at 0·9 of stroke; back pressure 17 lbs. per square inch absolute; clearance 6 per cent.; expansion and compression curves $p\,v$ = constant.

3. A gas engine uses 19 cubic feet of gas per hour per indicated horse-power (calorific value 550 B.Th.U. per cubic foot). Find the thermal efficiency of the engine and the efficiency ratio, if the compression ratio is 4·5 to 1. Assume the ratio of the specific heats is 1·4.

4. In a trial of a steam boiler the feed water entered the boiler at 100° F. and was evaporated into steam at 382° F. The steam was afterwards raised to 582° F. by the flue gases without change of pressure. Find the equivalent evaporation from and at 212° F. if 9 pounds of water were evaporated per pound of coal consumed. Why is the "equivalent evapora-

tion from and at 212° F." usually stated in boiler trials? Latent heat of steam = $1{,}114 - 0{\cdot}7\,t$, where t is the temperature of evaporation. Specific heat of superheated steam = 0·5.

5. One pound of water at 32° F. is raised to 328° F. and then converted into steam at 328° F. Draw an entropy scale for the above process, and complete the temperature-entropy diagram. (The latent heat of one pound of steam at 328° F. = 890 B.Th.U.) State numerically the heat units represented by 1 square inch of the diagram.

6. Show approximately the positions of the crank of a gas engine when the valves open and close and when ignition takes place. How can the valve setting of a gas engine be practically determined?

7. Explain what is meant by wet and dry compression in an ammonia compressor. Illustrate your answer by reference to the temperature-entropy diagram. In a test of an ammonia compressor 80 lbs. of cooling water were required per minute, having an inlet temperature of 55° F. and an outlet temperature of 67° F. Diameter of compressor cylinder 6 inches; stroke 10 inches; 150 strokes per minute; mean pressure 55 pounds per square inch. Find the coefficient of performance, neglecting all heat losses.

8. The cut-off of the steam in a steam-engine cylinder is required to be at 0·5 of the stroke; angle of lead 6°; greatest opening to steam 2 inches. Find the travel of the valve, lap of the valve, and angle of advance of the eccentric. Neglect the obliquity of the connecting-rod.

9. Show by sketches how to take a sample of the boiler flue gases and how to determine the percentage of carbon dioxide and oxygen present. What precautions are necessary in order to obtain an accurate result? State approximately the percentage of each when the boiler is working economically with coal as fuel.

10. What is meant by the higher and lower calorific value of a fuel? Explain how the calorific value of a fuel oil may be determined. In a calorimeter experiment it was found that 0·017 lb. of oil was consumed and 6 lbs. of water were raised 54° F. Calculate the higher calorific value of the oil.

11. Explain with a sketch the construction and working of some type of gas producer for gas engines. Compare the suction gas producer with the pressure gas producer.

12. In recent years steam turbines have been combined with reduction gearing in certain cases for the propulsion of ships. Explain briefly the reasons for such speed reduction, and sketch and describe any type which has been used.

INDEX.

A

"ABERDEEN," S.S., indicator diagrams, 238.
Absolute zero of temperature, 158.
Absorption dynamometer, 270.
Actual and imaginary steam expansion curves, 207.
—— *versus* the ideal behaviour of steam in a cylinder, 197.
Adiabatic curve, 161, 208.
—— expansion of saturated and superheated steam, 161, 207, 211.
Admission of steam to cylinder, 174.
Air-pumps, 480, 489.
Alley's patent flexible coupling, 404.
American beam engine, 390.
Amsler's planimeter, 249.
Antilogarithms, 526.
Areas, simple rule, 150.
—— Simpson's rule, 151.
Atmospheric engines, 4.

B

BALANCING moving parts, 291.
Barrus steam calorimeter, 137.
Beam engines, 13, 15, 17, 390.
Bearings, Main shaft, 474.
—— Thrust, 475.
Beldam's corrugated metallic valve, 481.
Belliss' engine, 370.
Benefits of superheated steam, 211.
Black's experiments on heat, 82.
Boiling point of liquids, 103.
Bon-Accord centrifugal pump, 492.
Bourdon's gauges, 94-97.
Boyle's law, 146, 151.
Brakes for measuring H.P., 270-277.
British thermal unit, 39.
Brock's quadruple-expansion engines, 442.
Buckley's piston, 470.
"Buenos Aires," S.S., indicator diagrams, 445.
Bunsen's ice calorimeter, 40.

C

CALLENDER'S recorder, 35.
Callender & Griffiths' resistance thermometer, 33.
Calorific values of coals and gases from their chemical analysis, 56.
Calorimeter, Junkers' gas and oil, 52.
—— Rosenhain coal, 48.
—— Steam, 136.
—— Wm. Thomson's coal, 46.
Calorimetry, 40-56.
Capacity for heat, 42.
Carnot's principle, 167.
Cataract governor, 12.
"Central" steam trap, 447.
Centrifugal pumps, 482, 492.
Charles' law, 158.
Cipollina M'Innes-Dobbie indicator, 225.
Circulating pumps, 482.
Civil Engineers Exams., Rules and syllabus for, 529.
Clearance in cylinder and its effects, 212.
Combining indicator diagrams, 233, 237.

" Comet " engine, 386.
Compound and triple-expansion engines with automatic lubrication, 368.
—— engines, Cole-Marchent's, 354.
—— —— Hornblower's, 18.
—— —— Land, 314-337.
—— —— Theory of, 216.
—— locomotives, 515.
Compression in cylinder, 174, 214.
Computer, M'Dermott screw propeller, 428.
Condensation, Initial, 199.
—— loss of pressure and temperature, 197.
—— of steam, water required, 113.
—— superheating as a preventive, 201.
Condenser ends and doors, Corrosion of, 501.
—— tubes, composition and faults, 500.
—— tube packing, 478.
Condensers, Kinds of, 475.
—— Temperature and pressure of aqueous vapour in, 497.
—— Testing, 488.
Condensing plant for a Curtis turbine, 494.
—— —— for the Manx Electric Railway, 486.
Conduction of heat, 62.
Conductivity table, 67.
Connecting-rod, 288, 297.
Convection of heat, 68.
Cooling water required with ejector condensers, 500.
Corliss trip gear, 344.
—— —— —— Reynolds-, 350.
—— valve engine, 339-348.
—— —— gears, Types of, 342.
—— valves, Shape of steam and exhaust, 343.
Coupling for marine shafts, 404.
Crank, Action of, 285.
—— effort of curves, 290, 301-309.
—— relative position to piston, 175.
—— shafts, 473.
Crosby indicator, 222.
Crosshead, Engine, 335, 470.
Cushioning, 214.
Cut-off, 174.
Cylinders, 317, 399, 451.

D

Davy's experiments on heat, 75.
Defective indicator diagrams, 230.
Density of gas, 147.
Diagonal engines, 399.
Diagram of twisting moments, 285.
Diagrams of crank efforts, 290, 301-309.
—— of work, 122, 147, 229.
Diffusiveness, Table of, 67.
Distribution of steam in cylinder, 170.
Dobson's trip gear, 352.
Double-acting engine, Watt's, 15, 17.
Double eccentric valve gears, 350.
Double-ported slide valve, 454.
Dryness fraction, 102.
—— —— indicator, 136.
Dynamometers, 270-277.

E

Early forms of land engines, 1-21.
—— —— of locomotives, 505.
—— —— of marine engines, 384.
—— invention of the screw propeller, 411.
—— patents of engines, 20.
Ebullition and circulation of water in water-tube boilers, 70-72.
Eccentric, angle of advance, 173.
—— Throw of, 173.
—— valve gears, Double, 350.
—— —— —— Single, 339-349.
Eccentrics, fixing backward and forward, 180.
Economy due to steam-jacketing, 201.
Edwards' air pump, 489.
Ejector condensers, 498.
Electrical pyrometer or resistance thermometer, 32.
Engines, American beam, 390.
—— Atmospheric, 4.
—— Belliss and Morcom, 370.
—— Brock's quadruple-expansion, for S.S. " Buenos Aires," 442.
—— Cole-Marchent's, 354.
—— " Comet's," 386.
—— compound non-condensing, 324.

Engines, compound, Theory of, 216, 432.
—— Condensing land, 316.
—— Corliss valve, 339-348
—— Diagonal, 399.
—— double-acting, Watt's, 15.
—— Efficiency of steam, 123.
—— Geared, 411.
—— "Grasshopper," 387.
—— Heat, 162.
—— "Hero's," 1, 2.
—— Horizontal direct-acting, 415.
—— Hornblower's, 18.
—— Land, 315-329.
—— Locomotive, 505.
—— Maudsley's return connecting-rod, 413.
—— Non-condensing land, 315.
—— Oscillating, 394.
—— Penn's trunk, 412.
—— Quadruple-expansion, 441.
—— —— for S.S. "Inchdune," 446.
—— Reynolds-Corliss valve, 351.
—— Savery's, 2.
—— Side-lever, 388.
—— Single-acting, 11, 13.
—— Stationary land, 314.
—— "Steeple," 393.
—— S.S. "Arabian," 436.
—— S.S. "Inchdune," 304, 446.
—— Triple-expansion, 368.
—— Willans' central valve, 374.
Equivalent evaporation from and at 212° F., 134.
Errors in indicators, 225.
Evaporation, Factors of, 134.
—— of water in steam, Partial, 131.
—— Total heat of, 107, 109.
Ewing's trials of the Schmidt system, Prof., 203.
Expansion, Adiabatic, 161, 207.
—— gear, 321.
—— of gases doing work, 118, 158, 160.
—— of steam, 118, 207, 211.
Express passenger locomotive, 507.

F

Factor of evaporation, 134.
Fairbairn's saturation curve, 236.
Farcot-Corliss single eccentric trip valve gear, 340.
Farcot-Corliss valve gear, Criticism of the, 380.
Faults in condenser tubes, 500.
Feathering paddle-wheels, 407.
Forbes' experiment on conductivity, 64.
Fuel testing apparatus, 46.

G

Gas, Constant C for a, 160.
—— Expansion of, 158.
—— Pressure of, 146.
—— Specific heat of a, 161.
—— Volume of, 146.
Gauges for pressure, 93-97.
Gear, Farcot-Corliss valve, 340.
—— Dobson trip, 352.
—— Hackworth, 461.
—— Inglis and Spencer trip, 366.
—— Reynolds-Corliss, 350.
Giffard's injector, 512.
Governor, Belliss and Morcom's, 367.
—— Cataract, 12.
—— Hartnell's, 321.
—— Richardson's, 335.
—— Watt's, 15, 17.
—— Willans', 378.
Gridiron slide valve, 455.
Griffiths and Callender's resistance thermometer, 33.
Griffiths' screw, 424.
Gwynne's centrifugal circulating pump, 483.
—— sea and bilge cock for circulating pump, 482.

H

Hackworth valve gear, 461.
Hartnell's governor, 321.
Heat, Capacity for, 39.
—— conduction, 62.
—— convection, 68.
—— conversion, work into heat, 77.
—— engines, 162.
—— family tree, 109.
—— kinetic theory, 90.
—— Latent and sensible, 83, 90
—— Quantity of, 39.

Heat radiation, 60.
—— rejected to condenser, 126.
—— Specific, 42, 56.
—— thermo-dynamics, first law, 78.
—— Total, of evaporation, 107, 109.
—— Transfer of, 60.
—— Unit of, 39.
—— values of coals and gases from their chemical analysis, 56.
Hero's engine, 1.
Hirsch's screw, 425.
History of land engines, 1-20.
—— of locomotive engines, 505.
—— of marine engines, 384.
—— of superheated steam, 202.
Hornblower's engine, 18.
Horse-power by brake, 270.
—— How to find, 261.
—— Indicated, 260.
—— Nominal, 260.
Hyperbolic curve, 161, 207.
—— logarithms, 269.

I

Imaginary and actual steam expansion curves, 207.
"Inchdune," S.S., engines and indicator diagrams, 446.
Indicated horse-power, 260.
Indicator diagrams, 228, 233, 236, 328, 445.
—— —— as modified by inertia, 294.
—— —— Defective, 230.
—— —— Water present during expansion by means of the, 238.
—— —— with the planimeter, To measure, 251.
—— dryness fraction, 136.
—— Errors in, 225.
—— M'Innes-Dobbie Cipollina, 225.
—— Crosby, 222.
—— reducing mechanism, 226.
—— Watt's, 221.
Inertia of moving parts, 291, etc.
Inglis and Spencer trip gear, 366.
Initial condensation in the cylinder, 199.
—— —— Superheating as a preventive against, 201.
Injector for locomotive, 512.
Inside lead, 68.
Instantaneous axis, 298.
Institution of Civil Engineers, Rules and Syllabus of Exams., 529.
Isothermal curve, 161, 207.

J

Jacketing cylinders, 199.
Joule's experiments on heat, 75.
Joy's valve gear, 403, 516.
Junkers' gas and oil calorimeter, 52.

K

Kinetic theory of heat, 90.

L

Lancaster spiral-spring piston, 469.
Land engines, 314-337.
Lap and lead, 172, 216.
Latent heat, 81, 90.
Law, Boyle's, 146.
—— Carnot's, 167.
—— Charles', 158.
—— First, of thermo-dynamics, 78.
Lead, Effect of, 215.
Link motion for oscillating cylinder, 398.
Liquefaction in cylinder, 199.
Locomotives, 505-521.
Logarithms, Napierian, 269.
—— Table of, 524.
Loss of pressure and temperature between boiler and engine cylinder, 197.

M

M'Dermott screw propeller computer, 428.
Mangin's screw, 425.
Manx Electric Railway, Surface condensing plant for, 484.
Marcet's boiler, 84.
Marine engines, 384-410.
Mean pressure formulæ for cylinder, 263.

Mercurial pressure gauge, 93.
—— vacuum gauge, 94.
Moments, Twisting, of crank, 286.

N

Napierian logarithms, 269.
Nature of heat, 73, 90.
Newcomen's atmospheric engine, 4.
Nominal horse-power, 260.
Non-condensing engine, 315, 416.

O

Oscillating cylinder, 396.
—— engines, 394.

P

Paddle-wheels, 406.
Parallel motion, 13, 15.
Passenger locomotive, 507.
Patents, List of early, 20.
Penn's trunk engine, 412.
Piston, Buckley's, 470.
—— Cause of unequal distribution of steam during stroke of, 178.
—— Kirk's coned, 468.
—— Lancaster, 469.
—— locomotive form, 467.
—— old form, 467.
—— relative position to crank, 175
—— Smeaton's, 6.
—— valves, 365, 458.
—— Willans', 374.
Pitch of screw, 420.
" Pitting " of condenser tubes, 500.
Planimeter, Amsler's, 249.
—— Directions for using, 251.
—— Mathematical explanation of, 254.
Polar curves of tangential force on crank pin, 286.
Pressure and temperature of aqueous vapour in condensers, 497.
—— gauges, 93-97.
—— Mean, in cylinder, 263.
—— of a gas, 146.
—— of saturated steam, 83, 88, 146.
Prony brake, 270.
Propeller, Early invention of the screw, 411.
—— Types of, 420.
Pumps, Centrifugal, 492.
—— Circulating, 482.
—— Edwards' air, 489.
—— Water discharged by, 496.
Pyrometers, 29-37. 97.

Q

Quadruple-expansion engines, 304, 441, 446.
Quantity of heat, 39.
—— —— —— in steam, 123.
—— of water required for condensing steam, 110, 115, 500.

R

Radial paddle-wheels, 406.
Radiation of heat, 60.
Recorder Callender's, 35.
Reducing mechanism, 226.
Regnault's experiments, 84.
Release, 175, 215.
Relief valves, 405.
Return connecting-rod engine, 413.
Reversing link motion, 459.
Reynolds-Corliss valve gear, 350.
Rope dynamometer, 273.
—— —— Advantages of, 274.
—— —— Tests of small engines with, 275-277.
Rosenhain coal calorimeter, 48.
Rumford, Count, experiments, 73.

S

Saturated steam, tables, 86-89.
Saturation curve, 207, 208, 236.
Savery's engine, 2.
Schæffer and Buddenberg's thermometers, 23.
Schæffer's pressure gauge, 97.
Schmidt system, Prof. Ewing's trials of the, 203.
Screw propeller computer, M'Dermott, 428.

Screw propellers, 418-431.
—— —— early forms, 420.
—— —— —— invention, 411.
Sensible heat, 81, 90.
Separators, Steam, 212, 366.
Shaft bearings, 474.
Shafts, Crank, 473.
Side lever engines, 388.
Siemens' pyrometers, 30.
Simpson's rule for areas, 151.
Single-acting engine, Watt's, 11.
Slide valves, 172, 317.
—— —— Double-ported, 454.
—— —— Formulæ for ordinary, 185-192.
—— —— Locomotive, 453.
—— —— old D form, 453.
—— —— piston valve, 457.
—— —— Thom's trick valves, 456.
Slip of screw, 427.
Smeaton's piston, 6.
Society of Arts' rope dynamometer, 273.
Specific heat of a substance, 42.
—— —— of gases, 56, 161.
—— —— of steam, 57, 162*a*.
—— —— table, 45.
Spencer and Inglis trip gear, 808.
Splitting of condenser tubes, 512.
Steam, Actual, *versus* the ideal behaviour of, 197.
—— calorimeter, 136.
—— compression or cushioning, 214.
—— distribution in cylinder, 170.
—— engines, early forms, 1-21.
—— Equivalent evaporation of, 134.
—— Expansion of, 207.
—— Generation of, 133.
—— jacketing, Economy due to, 201.
—— liquefaction in cylinder, 199.
—— Saturated, 86, 87, 118.
—— sensible and latent heats, 81, 90.
—— separators, 212.
—— specific heat, 57, 162*a*.
—— Superheated, 102, 162*a*.
—— tables, 88, 89.
—— temperature, etc., 83, 88.
—— trap, the "Central," 447.
—— water required for condensing, 110, 115.
—— wire drawing, 216.
—— Work done during conversion of water into dry, 118.
Stephenson's link motion, 459.
Superheat on the indicator card, Effect of raising the, 246.
Superheated steam, Benefits of, 201, 211, 243, 357.
Surface condensers, 115, 116, 207-211, 475.

T

Temperature, 22.
—— Absolute zero, 158.
—— and pressure of aqueous vapour in condensers, 497.
—— of steam, 83, 88.
—— tables, 24-27.
Tests of small engines with the rope brake, 275-277.
Thalpotasimeter, 97.
Thermal capacity, 42.
—— conductivity of a body, 64.
—— unit, British, 39.
Thermo-dynamics, first law, 78.
Thermometer, Resistance, 32.
—— Thermo-electric, 36.
Thermometry, 22.
Thom's double-ported trick slide valve, 456.
Thomson coal calorimeter, 46.
Thornycroft's screw, 426.
Throw of eccentric, 173.
Travel of a slide valve, 173.
Trip gear, Corliss, 344-349.
—— —— Dobson's, 352.
—— —— Reynolds-Corliss, 350.
Triple-expansion engines, 370, 432.
Trunk engine, 412.
Twisting moment, 286, 301.

U

Unequal distribution of steam during strokes of piston, Cause of, 178.
Unit of heat, 39.
—— of power, 260.
Useful constants, 811.

V

Vacuum gauges, 94-97.
—— in condensers, 114.
Valve gear, Farcot-Corliss, 340.
—— —— Hackworth, 461.

Valve gear, Joy's, 403, 516.
—— —— Link motion, 459.
—— —— Oscillating engine, 394.
—— Position of the valves in Corliss, 341.
—— gears, Different types of Corliss, 342.
—— lap and lead, 172.
—— motion diagram, 174, 182.
Valves, Air and circulating pump, 481.
—— Beldam's corrugated metallic, 481.
—— Criticism of the Farcot-Corliss cylinder and position of the, 380.
—— formulæ for ordinary slide, 185-192.
—— Relief, 405.
—— Shape of steam and exhaust Corliss, 343.
Vertical engines, 374, 416.
Volume of a gas, 89, 146.
—— of steam, 108, 146.

W

Water, boiling point, 103.
—— for condensation, 110, 117.
Water, Latent heat of, 81.
—— pyrometers, 29-31.
—— total heat of evaporation, 107, 121.
Watkinson's superheaters, Professor, 204.
Watt's cataract governor, 12.
—— diagram of work, 147.
—— double - acting engine, 15, 17.
—— engines, 8-18.
—— indicator, 221.
—— model in Glasgow, 9.
Willans' triple-expansion engine, 374.
Wire drawing, Effect of, 216.
Work and heat, 75.
—— Expressions for external and internal, 125.
—— Internal and external, 120.
—— into heat in heat engines, 164.
—— of steam, 118, 146.

Z

Zero of temperature, 158.
Zeuner's diagrams, 175, 182

BELL AND BAIN, LIMITED, PRINTERS, GLASGOW

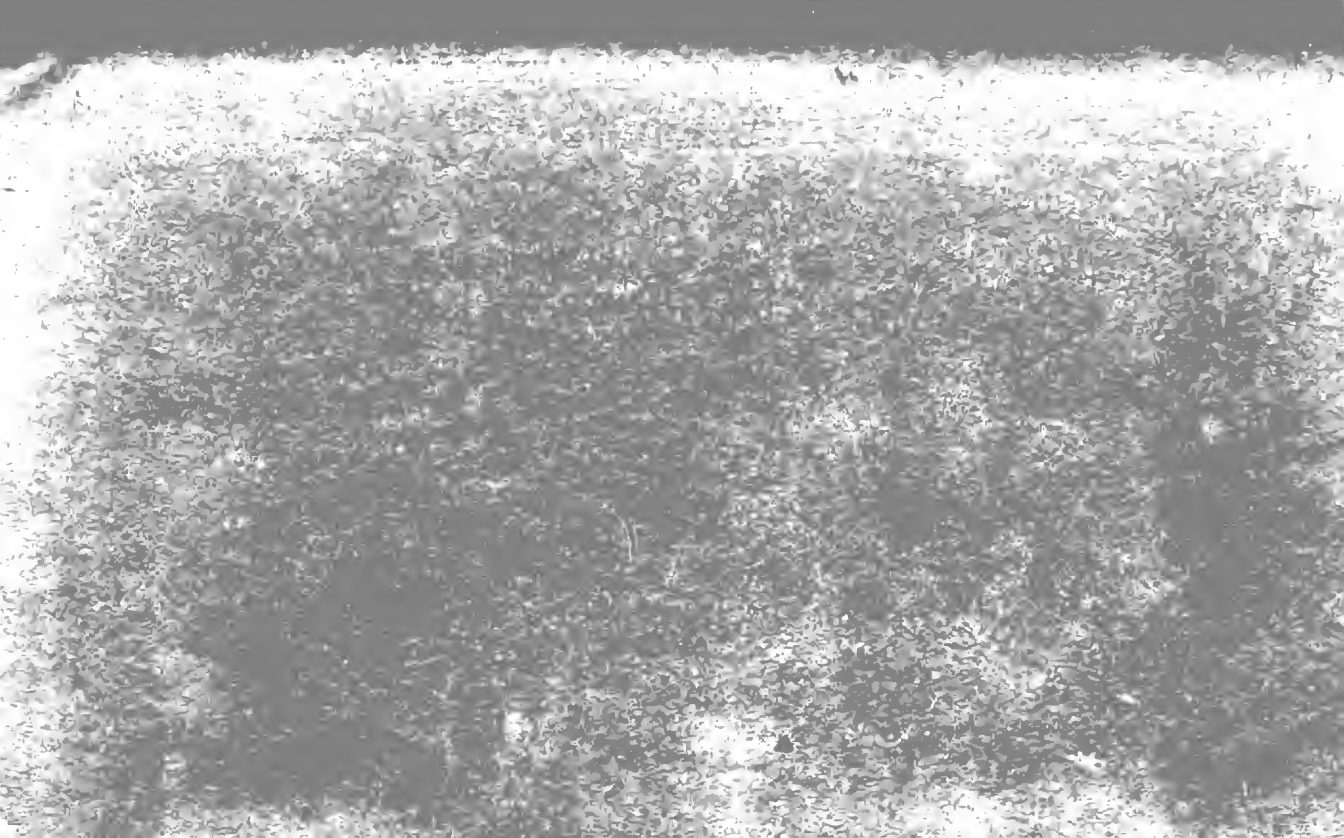

635078

TEM
J

Jamieson, Andrew
A text-book of heat and heat engines. 18th.
ed. v.1

DATE

NAME OF BORROWER

UNIVERSITY OF TORONTO
LIBRARY

DO NOT
REMOVE
THE
CARD
FROM
THIS
POCKET